ENTRELEC TERMINAL BLOCKS

Master catalog

ENTRELEC Terminal Blocks

Master catalog

SNK SERIES TERMINAL BLOCKS

DEDICATED APPLICATIONS TERMINAL BLOCKS

RGW RING LUG TERMINAL BLOCKS

DBL POWER DISTRIBUTION BLOCKS

ESSAILEC® TEST BLOCKS

RAILWAY APPLICATIONS TERMINAL BLOCKS

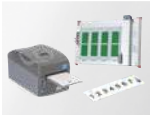

MARKING SOLUTIONS

EASY RAIL DESIGNER 3D

1-1773980-7_Couv1-summary_TE

1-1773980-7_EN - Edition February 2020

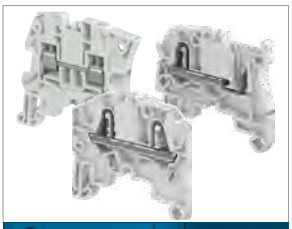

SNK SERIES TERMINAL BLOCKS

PI-Spring, screw clamp and pluggable technologies

ENTRELEC Terminal Blocks

Explanatory page

Here is the first SNK Series Terminal Blocks interactive catalog which contains numerous new functionalities:

- ☑ Additional information, about the product pages: in the table, click on the product order code to obtain the data sheet, the agreement and all technical information regarding that reference.
- ☑ A dedicated page to the SNK challenge videos and the SNK video
- ☑ A tab system on the side of the Flipbook helps you navigate easily inside the catalog
- ☑ Interactive summaries. One click on an entry leads you to the desired page.

Receive one link only in your email to open the Flipbook; once opened, you can download the PDF, only if you need to. No overload in your email box nor on your hard drive.

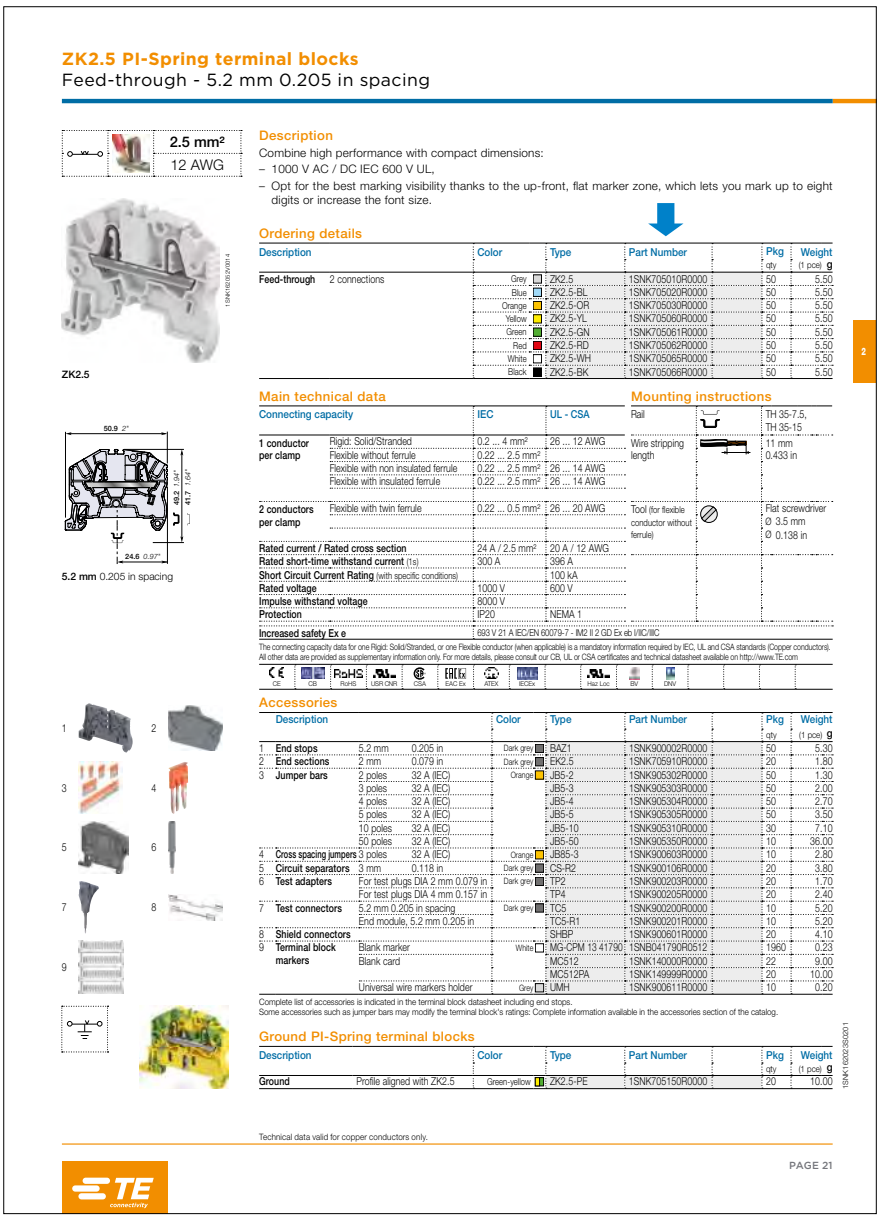

ZK2.5 PI-Spring terminal blocks
Feed-through - 5.2 mm 0.205 in spacing

2.5 mm²
12 AWG

Description
Combine high performance with compact dimensions:
- 1000 V AC / DC IEC 600 V UL,
- Opt for the best marking visibility thanks to the up-front, flat marker zone, which lets you mark up to eight digits or increase the font size.

ZK2.5

Ordering details

Description		Color	Type	Part Number	Pkg qty	Weight (1 pce) g
Feed-through	2 connections	Grey	ZK2.5	1SNK705010R0000	50	5.50
		Blue	ZK2.5-BL	1SNK705020R0000	50	5.50
		Orange	ZK2.5-OR	1SNK705030R0000	50	5.50
		Yellow	ZK2.5-YL	1SNK705060R0000	50	5.50
		Green	ZK2.5-GN	1SNK705061R0000	50	5.50
		Red	ZK2.5-RD	1SNK705062R0000	50	5.50
		White	ZK2.5-WH	1SNK705065R0000	50	5.50
		Black	ZK2.5-BK	1SNK705066R0000	50	5.50

50.9 2"
5.2 mm 0.205 in spacing

Main technical data

Connecting capacity		IEC	UL - CSA
1 conductor per clamp	Rigid: Solid/Stranded	0.2 ... 4 mm²	26 ... 12 AWG
	Flexible without ferrule	0.22 ... 2.5 mm²	
	Flexible with non insulated ferrule	0.22 ... 2.5 mm²	26 ... 14 AWG
	Flexible with insulated ferrule	0.22 ... 2.5 mm²	26 ... 14 AWG
2 conductors per clamp	Flexible with twin ferrule	0.22 ... 0.5 mm²	26 ... 20 AWG
Rated current / Rated cross section		24 A / 2.5 mm²	20 A / 12 AWG
Rated short-time withstand current (1s)		300 A	396 A
Short Circuit Current Rating (with specific conditions)			100 kA
Rated voltage		1000 V	600 V
Impulse withstand voltage		8000 V	
Protection		IP20	NEMA 1
Increased safety Ex e		693 V 21 A IEC/EN 60079-7 - IM2 II 2 GD Ex eb I/IIC/IIIC	

Mounting instructions

Rail	TH 35-7.5, TH 35-15
Wire stripping length	11 mm 0.433 in
Tool (for flexible conductor without ferrule)	Flat screwdriver Ø 3.5 mm Ø 0.138 in

The connecting capacity data for one Rigid: Solid/Stranded, or one Flexible conductor (when applicable) is a mandatory information required by IEC, UL and CSA standards (Copper conductors). All other data are provided as supplementary information only. For more details, please consult our CB, UL or CSA certificates and technical datasheet available on http://www.TE.com

CE, CB, RoHS, UR CNR, CSA, EAC Ex, ATEX, IECEx, Haz Loc, BV, DNV

Accessories

	Description			Color	Type	Part Number	Pkg qty	Weight (1 pce) g
1	End stops	5.2 mm	0.205 in	Dark grey	BAZ1	1SNK900002R0000	50	5.30
2	End sections	2 mm	0.079 in	Dark grey	EK2.5	1SNK705910R0000	20	1.80
3	Jumper bars	2 poles	32 A (IEC)	Orange	JB5-2	1SNK905302R0000	50	1.30
		3 poles	32 A (IEC)		JB5-3	1SNK905303R0000	50	2.00
		4 poles	32 A (IEC)		JB5-4	1SNK905304R0000	50	2.70
		5 poles	32 A (IEC)		JB5-5	1SNK905305R0000	50	3.50
		10 poles	32 A (IEC)		JB5-10	1SNK905310R0000	30	7.10
		50 poles	32 A (IEC)		JB5-50	1SNK905350R0000	10	36.00
4	Cross spacing jumpers	3 poles	32 A (IEC)	Orange	JB85-3	1SNK900603R0000	10	2.80
5	Circuit separators	3 mm	0.118 in	Dark grey	CS-R2	1SNK900106R0000	20	3.80
6	Test adapters	For test plugs DIA 2 mm 0.079 in		Dark grey	TP2	1SNK900203R0000	20	1.70
		For test plugs DIA 4 mm 0.157 in			TP4	1SNK900205R0000	20	2.40
7	Test connectors	5.2 mm 0.205 in spacing		Dark grey	TC5	1SNK900200R0000	10	5.20
		End module, 5.2 mm 0.205 in			TC5-R1	1SNK900201R0000	10	5.20
8	Shield connectors				SHBP	1SNK900601R0000	20	4.10
9	Terminal block markers	Blank marker		White	MG-CPM 13 41790	1SNB041790R0512	1960	0.23
		Blank card			MC512	1SNK140000R0000	22	9.00
					MC512PA	1SNK149999R0000	20	10.00
		Universal wire markers holder		Grey	UMH	1SNK900611R0000	10	0.20

Complete list of accessories is indicated in the terminal block datasheet including end stops.
Some accessories such as jumper bars may modify the terminal block's ratings. Complete information available in the accessories section of the catalog.

Ground PI-Spring terminal blocks

Description		Color	Type	Part Number	Pkg qty	Weight (1 pce) g
Ground	Profile aligned with ZK2.5	Green-yellow	ZK2.5-PE	1SNK705150R0000	20	10.00

Technical data valid for copper conductors only.

PAGE 21

Click on the product part number to obtain detailed information and agreements.

1SNK160094S0201

Videos

SNK challenges

Discover how our SNK terminal blocks are able to overcome any kind of challenge!

What is the link between a terminal block, a washing machine, an egg and a child's play?
Find it out quickly by watching our 6 episodes bellow.
Get tips and experience moments of suspense and fun!

Episode 1

Built for extreme conditions?

Episode 2

So fast to connect?

Episode 3

Available everywhere on time for everyone?

Episode 4

So efficient marking?

Episode 5

Common accessories for all technologies?

Episode 6

Mounting is a child's play?

SNK video

SNK Series - The innovative range.

1SNK160094S0201

The innovative SNK series is available in PI-Spring (Push-In and Spring), screw clamp and pluggable technologies with common accessories. Qualified for worldwide applications and severe environments such as hazardous locations, railways, marine and solar.

Summary_1

SNK series, terminal blocks

PI-Spring, screw clamp and pluggable technologies

Ranges and technologies presentation 2

PI-Spring terminal blocks 13

Screw clamp terminal blocks 71

Pluggable terminal blocks 161

Accessories 195

Marking solutions 237

Index 270

1-1773957-4_EN - Edition January 2020

TE Connectivity proposes one of the largest Din Rail Terminal block offering on the market with various technologies: screw, PI-Spring, spring, IDC, pluggable, stud, etc. found in over 8000 products & solutions.

	SNK terminal blocks		Dedicated applications terminal blocks		Terminal blocks for railway applications
			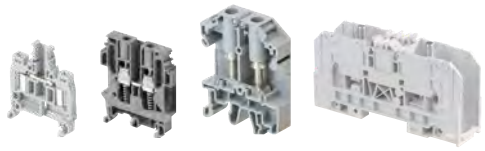		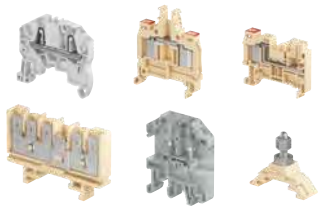
Scope	Qualified for worldwide applications and severe environments (such as hazardous locations, railways, marine and solar applications..). From 0.2 to 300 mm².		Specific terminal blocks and technologies for dedicated applications and markets.		The largest offering on the market for rolling stock and infrastructures.
Product families & functions	SNK PI-Spring technology 2.5 to 16 mm² 12 to 4 AWG	Feed-through Multi-deck Ground Disconnect for fuses Component holder	ADO System® (IDC) 0.22 to 4 mm² 24 to 12 AWG	ADO-ADO or ADO-screw clamp Feed-through / Multi-deck / Ground / Disconnect / for fuses / Component holder	SNK PI-Spring technology 2.5 to 16 mm² 12 to 4 AWG
			Safety (spring loaded) 0.22 to 10 mm² 24 to 6 AWG	Feed-through Disconnect Test & measurement	SNK pluggable screw & PI-Spring technologies 2.5 to 4 mm² 12 to 10 AWG
	SNK screw clamp technology 4 to 240 mm² 12 to 500 Kcmil	Feed-through Multi-deck Ground Disconnect for fuses Test & measurement Marshalling Component holder	Stud 25 to 300 mm² 4 AWG to 1000 Kcmil	One stud 2 studs One stud - One screw clamp	ADO System® (IDC) 1.5 to 4 mm² 16 to 12 AWG
			Ring lug 6 to 16 mm² 8 to 6 AWG	Feed-through Test & measurement	Stud 4 to 185 mm²
	SNK pluggable screw & PI-Spring technologies 2.5 to 4 mm² 12 to 10 AWG	Feed-through Multi-deck Ground	Miniblocks 1.5 to 6 mm² 18 to 8 AWG	Screw clamp Spring ADO System® (IDC)	Quick-connect 2.5 to 6 mm²
			Other types Test & measurement: with sliding link, blade, plug Pluggable: feed-through, double deck, disconnect Sensors/actuators: screw, spring, ADO system (IDC) Installation: screw, spring Protection: ground + neutral Component holders: screw, spring, ADO system (IDC)		

www.te.com

	DBL power distribution blocks	ESSAILEC® test blocks	Interfast PLC pre-wiring system	Marking solutions
				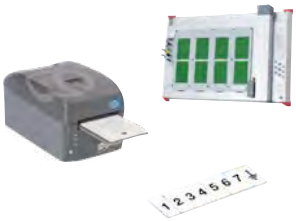
	The preferred choice for primary power distribution and solar applications.	Test blocks for safe and easy testing on secondary circuits of current and voltage transformers and sensors.	PLC pre-wiring system for fast, flexible, reliable connection of PLC's in process automation applications.	Markers & marking systems for all identification requirements in electrical panels.
	From 80 A up to 550 A (IEC) Modular blocks: single pole, three & four poles, up to 12 outputs Terminal blocks types: 2 to 10 poles, up to 20 outputs	Current and voltage sockets & plugs Simultaneous testing of 1 to 4 independent circuits on the same socket Several testing principle such as "make before break" for safe current transformer testing Panel and switchboard mounting : base, flush, rack, TH35 rail Multicircuits sockets & plugs	Interfast PCB: Compact & standard modules Interfast MS: Modular system based on terminal block technology Functions: – 1 to 4 wire connections (sensors) – Disconnect – Fuse – Signal indication – Relays – Optocouplers – Solenoid valve control – Galvanic isolation (2.5 kV).	Terminal block identification and group markers Wire and cable identification Component and equipment identification Panel identification Pre-printed markers for terminal blocks

1SNC160261S0201

1SNK160093S0201 - Rev. A

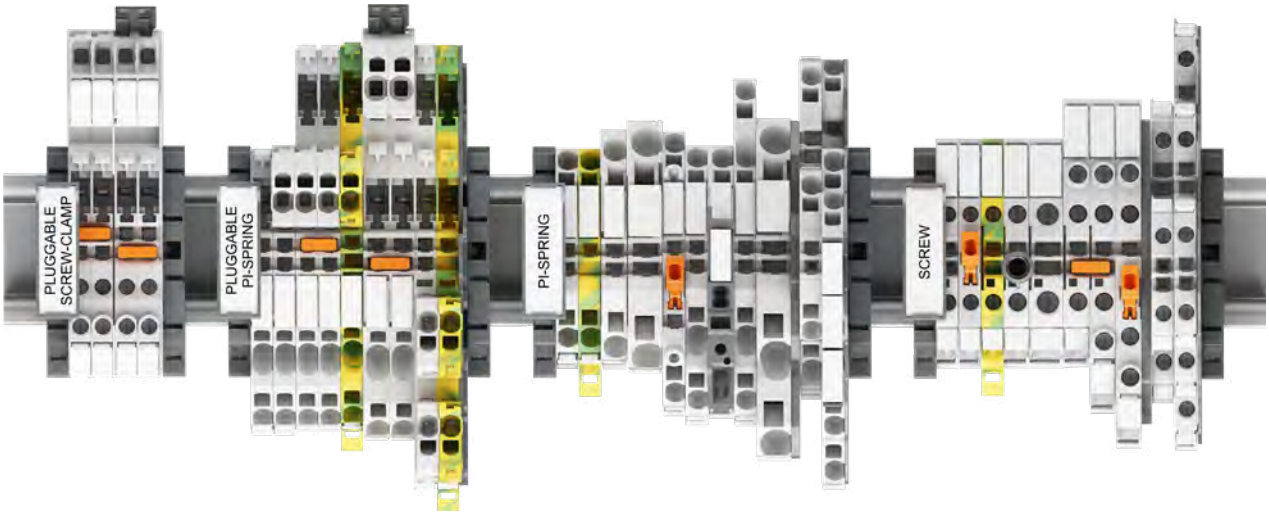

The innovative range available in PI-Spring (Push-In and Spring), screw clamp and pluggable technologies with common accessories.
Qualified for worldwide applications and severe environments such as hazardous locations, railways, marine and solar applications...

Speed up your projects

Smart connections, higher productivity
Up to 90% mounting time reduction with our PI-Spring, screw clamp and pluggable technologies.
Simplified selection and design
Intuitive codification, simplified catalogs, large technical data base.
Better project identification
20% larger marking area.
Pre-mark by hand or label before final marker installation.

Easy to install

Secured installation
Asymmetrical design avoid mounting and wiring errors.
Zero-retightening with our technologies.
Faster accessories mounting
Benefit from screwless ground connection, jumpers, end stops.
Smart design facilitating assembly process
Mounting, wiring, testing… made easy.

Optimized logistics

50% less accessories needed
End sections, circuit separators fit several blocks.
Common accessories
PI-Spring, screw and pluggable ranges share the same accessories.
Simplified inventory management
Significant reduction of part numbers to manage.

1SNK160093S0201 - Rev. A

PI-Spring technology
Two technologies in one connection

The patented design of TE Connectivity's PI-Spring can be used as a Push-in or traditional spring connection: Push-in and spring. The Push-in mode allows a direct one-step insertion of solid and flexible stranded wires with a ferrule, 50% faster than standard screw clamp technology.

Using the spring mode, very little effort is required to open the spring clamp with a screwdriver and insert the wire, which does not need a ferrule. The screwdriver locks in the terminal block after insertion, freeing up hands to manipulate wires or circuit drawings.

Features

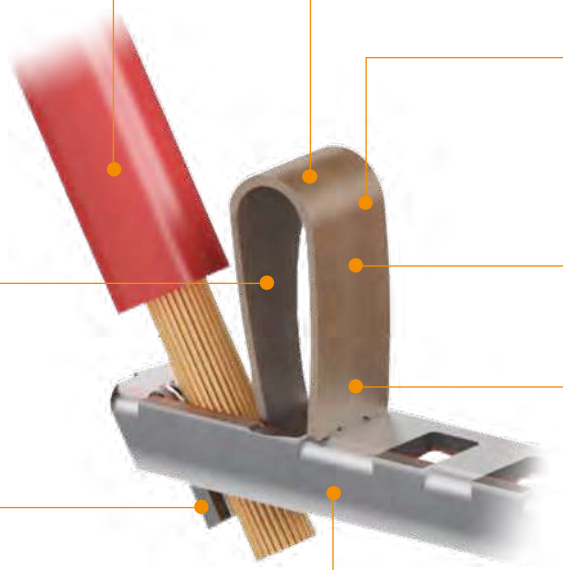

All certification testing performed with non prepared wires, ensuring perfect connections with or without ferrules

Connection elasticity and design strictly controlled to ensure an easy and safe insertion of both conductor and screwdriver

The PI-Spring technology has successfully passed aging tests (30 days temperature rise test and 14 days heat cycling test) guaranteeing the perfect long-term contact quality of our screwless technology

Flat surface of the PI-Spring makes wire and screwdriver insertion smoother and easier

Excellent pulling strength exceeding IEC standard requirements

Dimensions, coating and shape of the linking bar designed to get the lowest and most stable electrical contact value

Stainless steel PI-Spring for high corrosion resistance up to 1,000 hours salt mist resistance

Very good electrical contact even in applications where vibration and shock are an issue, such as railway

From 0.2 mm² up to 16 mm²
From 26 AWG up to 4 AWG

1SNK162052S0201 - Rev. A

Unique design, flies over time thanks to its reliability and safety
The TE Connectivity screw clamp technology is designed to avoids accidental releases due to vibrations, shocks or even abusive cable draw.

High density capacity
The screw clamp technology can fit up to two conductors per clamp which offers extended possibilities in electrical cabinets.

Features

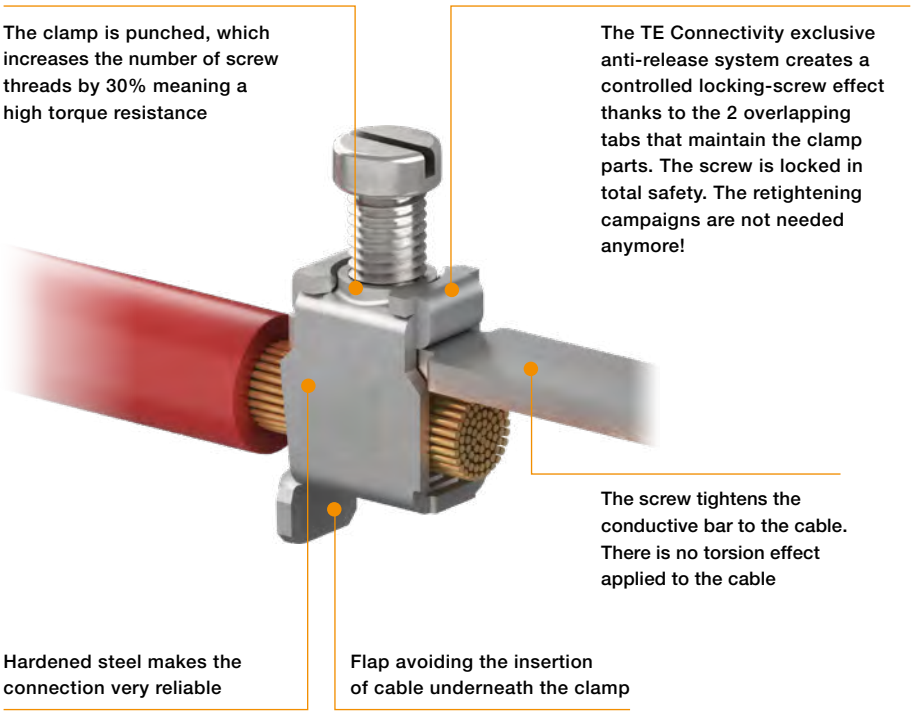

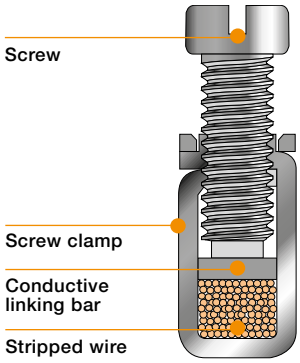

From 0.2 mm² up to 240 mm²

From 24 AWG up to 500 Kcmil

1SNK161087S0201 - Rev. A

Pluggable technology

The pluggable technology allows "plug and play" connection. It enables productivity savings, wiring optimization thanks to serialized pre-wired plugs harnesses, as well as secured final commissioning.

1

Features

The TE Connectivity plug is the most compact on the market thanks to the punched U-shaped linking bar allowing direct conductor contact.
TE Connectivity Patented design!

The lyres are made of copper alloy in order to offer maximized mechanical elasticity resistance
(superior to 50 matings/unmatings)

The TE Connectivity pluggable terminal blocks have successfully performed the marine environmental tests and meet the most severe rolling stock requirements in 3 axis vibrations and shock resistance (for PI-Spring pluggable terminal blocks versions)

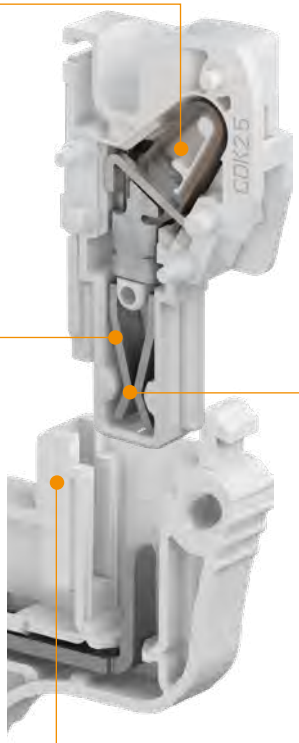

The chamfer shape guarantees auto-centering and mechanical integrity of the plug when inserted into the pluggable terminal block

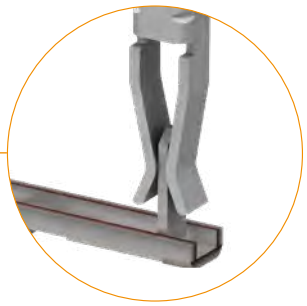

From 0.2 mm² up to 4 mm²

From 26 AWG up to 10 AWG

1SNK164011S0201

Qualified for worldwide markets, applications and for severe environments: vibration, shock, corrosion…

Industry and Commercial

SNK series, terminal blocks can be used worldwide in all types of industrial and commercial applications. All our products have CB, UL and CSA third party certificates delivered by independent laboratories. SNK series products are developed and qualified in accordance with the following international standards:
IEC 60947-1, IEC 60947-7-1, IEC 60947-7-2, IEC 60947-7-3, UL 1059, CSA C22.2 n°158-10.

RoHS

Solar

Thanks to their high voltage rating (up to 1500 VDC per IEC 60947-7-1 and 1000 VDC per UL 1059), SNK terminal blocks are ideally suited for use in solar equipment.

Waste and Water

SNK terminal blocks are well adapted to harsh environment conditions such as waste and water applications.
They have successfully passed the salt mist test in accordance with IEC 60068-2-11 (PI-Spring withstand up to >1000 h).
SNK terminal blocks are also compliant with flowing mixed gas corrosion test per IEC 60068-2-60 (test duration: 21 days).

1SNK160082S0201 - Rev. A

Railways

All SNK series products are suited to track-side fixed equipment.
For the more demanding environment of rolling stock applications, PI-Spring has been successfully tested in accordance with IEC 61373 requirements to resist high vibration and shock conditions (multi-axial waves, acceleration…).
The plastic material used is compliant with the flammability, smoke toxicity and opacity severe requirements of the traction segment and can be classified I2F2 per NF F 16-101 and NF F 16-102 standards; HL3 R22 per EN 45 545 standard and V0 per UL94 standard.
It complies with NFPA 130 per ASTM E 162 and ASTM E 662 standards tests and with FR238.103 and BSS 7239 standards.

Hazardous locations

SNK series is certified IEC Ex in accordance with IEC 60079-0 and IEC 60079-7 (increased safety "Exe") world international standards for products used in explosive atmospheres.
In order to serve specific local market requirements, some SNK products have additional local certifications such as: ATEX, UL hazardous Locations…
SNK products have successfully passed toughest tests like the thermal endurance test: 2 weeks in hot environment at 95 °C (+90% RH) followed by 2 weeks at 125 °C and one day cold environment test (-65 °C). This proves the high mechanical performances of the SNK products.

hazloc

Marine

SNK products have proven their performance by successfully passing tests required for the most extreme conditions. (eg: salt mist, damp or dry heat and cold environments) per IEC 60068 standards.
In order to serve the worldwide marine markets requirements, SNK products have the following Marine certifications:
BV Marine, DNV, RINA, RMRS.

DNV

1SNK160082S0201 - Rev. A

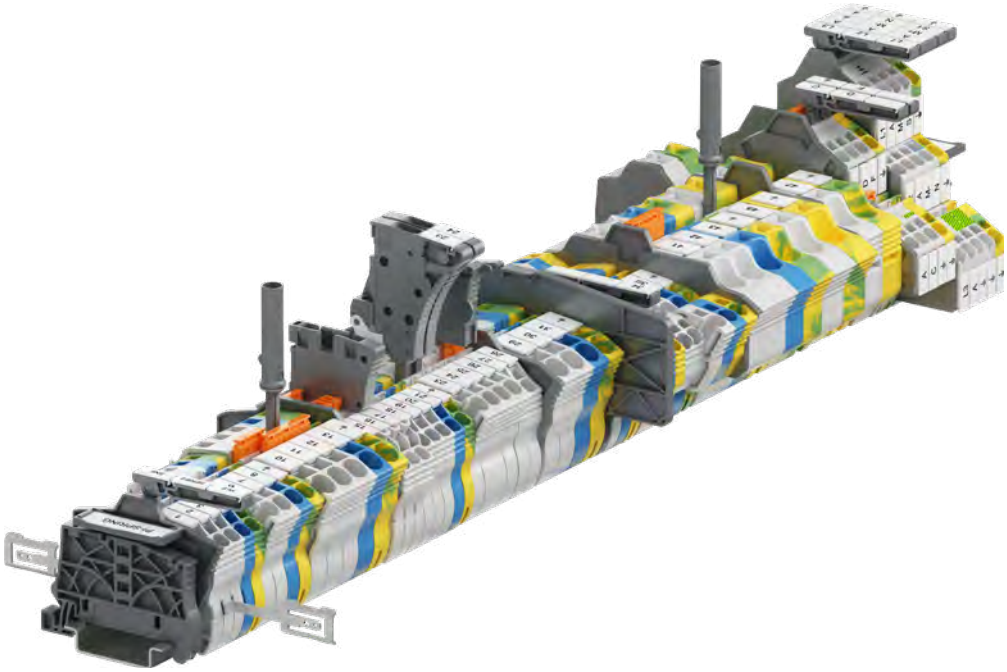

SNK series, terminal blocks
PI-Spring technology

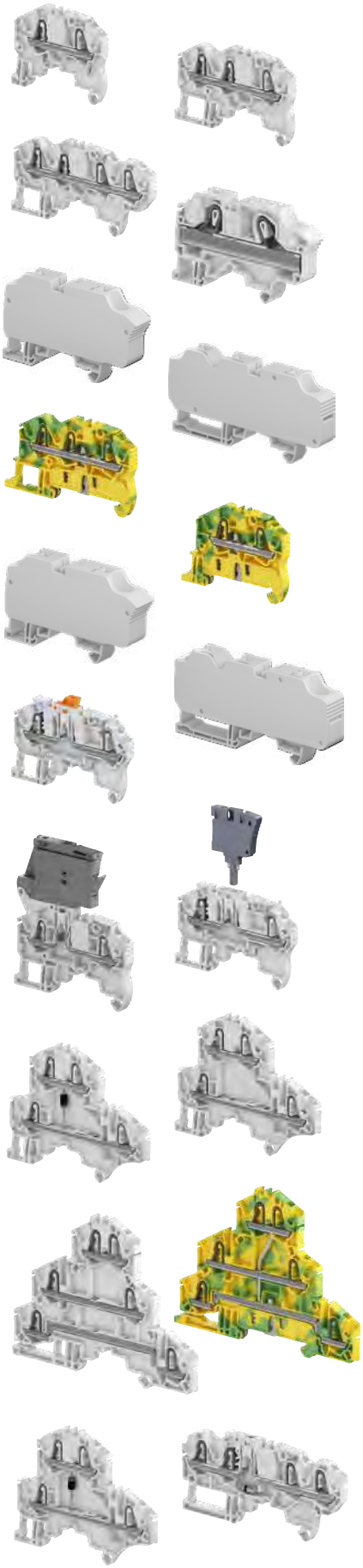

Technologies presentation			14
Overview			20
Feed-through			
2.5 mm² / 12 AWG	**ZK2.5**		21
	ZK2.5-3P	with 3 connections	22
	ZK2.5-4P	with 4 connections	23
4 mm² / 10 AWG	**ZK4**		24
	ZK4-3P	with 3 connections	25
	ZK4-4P	with 4 connections	26
6 mm² / 8 AWG	**ZK6**		27
	ZK6-3P	with 3 connections	28
10 mm² / 6 AWG	**ZK10**		29
	ZK10-PV		30
	ZK10-3P	with 3 connections	31
	ZK10-3P-PV	with 3 connections	32
16 mm² / 4 AWG	**ZK16**		33
	ZK16-PV		34
	ZK16-3P	with 3 connections	35
	ZK16-3P-PV	with 3 connections	36
Ground			
2.5 mm² / 12 AWG	**ZK2.5-PE**		37
	ZK2.5-PE-3P	with 3 connections	38
	ZP2.5-PE-4P	with 4 connections	39
4 mm² / 10 AWG	**ZK4-PE**		40
	ZK4-PE-3P	with 3 connections	41
	ZK4-PE-4P	with 4 connections	42
6 mm² / 8 AWG	**ZK6-PE**		43
	ZK6-PE-3P	with 3 connections	44
10 mm² / 6 AWG	**ZK10-PE**		45
	ZK10-PE-3P	with 3 connections	46
16 mm² / 4 AWG	**ZK16-PE**		47
	ZK16-PE-3P	with 3 connections	48
Disconnect with blade			
2.5 mm² / 12 AWG	**ZK2.5-S**	with test sockets	49
	ZK2.5-S-4P	with test sockets	50
	ZK2.5-S-R1		51
Disconnect with plug			
2.5 mm² / 12 AWG	**ZK2.5-SP**	with test sockets	52
	ZK2.5-SP-4P	with test sockets	53
For 5x20 fuses			
2.5 mm² / 12 AWG	**ZK2.5-SF**		54
	ZK2.5-SF-R	with blown fuse indicator	55
Double deck			
2.5 mm² / 12 AWG	**ZK2.5-D2**	2 feed-through circuits	56
	ZK2.5-D1	1 feed-through circuit	57
	ZK2.5-D2-PE	1 feed-through circuit and 1 ground circuit	58
	ZK2.5-D1-PE	1 ground circuit	59
Triple deck			
2.5 mm² / 12 AWG	**ZK2.5-T3**	3 feed-through circuits	60
	ZK2.5-T1	1 feed-through circuit	61
	ZK2.5-L-L-PE		62
	ZK2.5-L-N-PE	2 feed-through circuits and 1 ground circuit	63
	ZK2.5-T1-PE	1 ground circuit	64
Component holder			
2.5 mm² / 12 AWG	**ZK2.5-CH-4P-LR**		65
	ZK2.5-CH-4P-RL		66
	ZK2.5-D-CH-UD		67
	ZK2.5-D-CH-DU		68
	ZK2.5-D-CH2-DU-RL		69

The patented PI-Spring technology provides the benefits of both Push-In and Spring technologies in one connection

Speed up your projects

50% faster connection time with Push-in mode

Our Push-in connection technology allows:
A direct one step insertion with rigid and prepared flexible conductors.
Easy and quick insertion of the prepared flexible conductor or rigid conductor.

Reduced effort and conductor preparation time with spring mode

- Our connection requires minimal effort to insert wires with the screwdriver
- Flexible conductors preparation is not necessary.
- The screwdriver locks onto terminal freeing up hands.

Better project identification

- Circuit identification is improved thanks to the 20% larger marking area
- Pre-mark by hand or with label on our flat marking surface and start immediately the wiring, before the final markers mounting
- Spare markers re-printing in case of modifications.

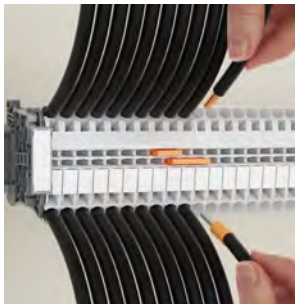

Push-in mode

Spring mode

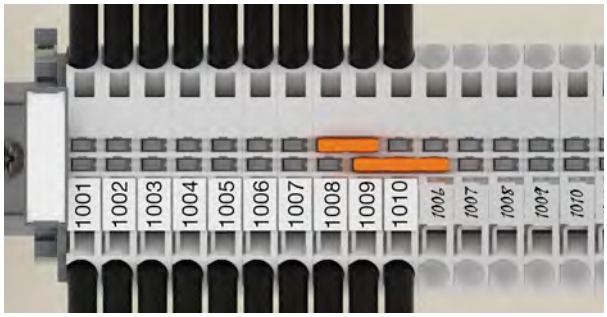

Clear circuit identification

1SNK162074S0201

Easy to install

Smart design facilitating assembly process

Mounting, wiring, testing… made easy

Avoid mounting and wiring errors: asymmetrical design allows immediate visual check in case of reversed terminal blocks.

Asymmetrical design avoids mounting error

Faster accessories mounting

Save up to 70% mounting time thanks to :

- screwless jumpers, component plugs, test devices, end stops and snap-in ground terminal blocks.

Screwless accessories

Snap-in ground terminal blocks

Closed jumper location allows great stiffness of the terminal block, avoid deflection while tightening and optimal jumper guiding.

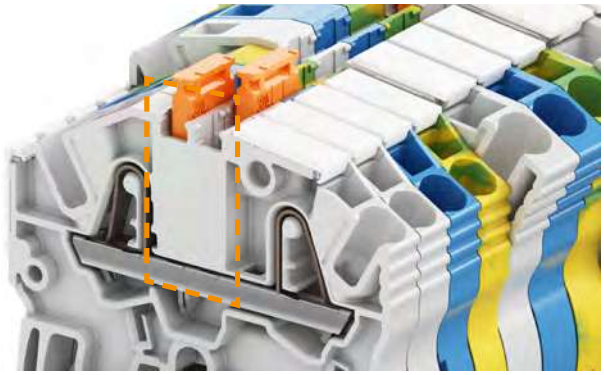

Closed jumper location for stiffness.

1SNK162074S0201

Easy to install

Smart accessories

Flexible test solutions from individual insulated test adapter to test connectors for complete assemblies testing.

- Direct plug-in into jumpers channels
- 5, 6, 8 mm spacing, mixing various spacing is possible
- 1000 V rating.

Plug-in individual test adapter. Plug-in test connector.

Component holder plugs for series or parallel component mounting (resistors, filters, diodes...).
Can be installed after wiring.
Series plug offers screwless component connection (no soldering).

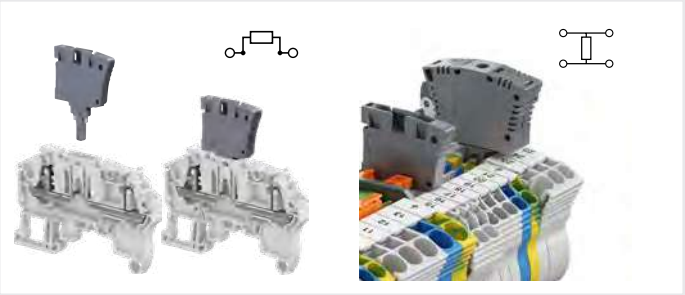

Series plug associated with disconnect blocks. Parallel plug to be installed between 2 blocks.

Smart plug-in jumpers:

Pre-cut poles removable by hand: clean cut.
Insulated up to 1000 V (avoid use of separators).
Predefined shapes in molding to easily identify connected poles with a pen.

Pre-cut poles easy removable by hand. Predefined shape to identify connected poles.

1SNK162074S0201

Optimized logistics

Reduce your accessories inventory by up to 50%

SNK PI-Spring, screw and pluggable ranges share the same accessories.

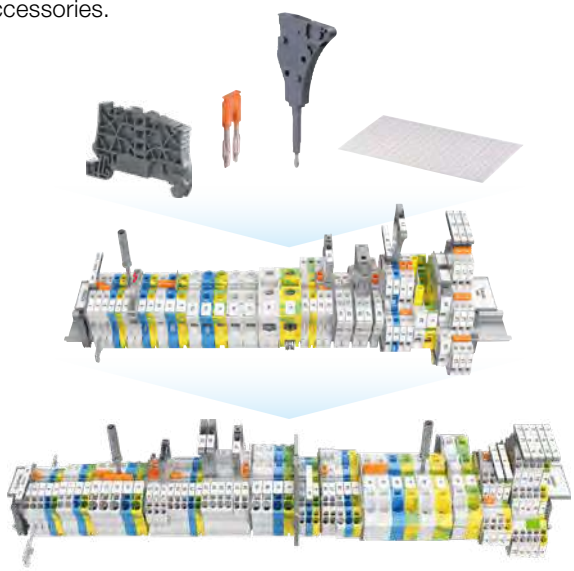

Shared accessories for SNK PI-Spring, screw and pluggable ranges

- All end sections and circuit separators fit several types and sizes of blocks
- One end section fits up to 21 models
- One circuit separator fits with 62 terminal blocks.

End sections and circuit separators fit several types and sizes of blocks

50% less inventory makes PI-Spring attractive to all worldwide markets

- The user selects one range but benefit from 2 connection modes (push-in and spring) which have global certifications and access to markets and applications worldwide
- Reduced packaging adapted to the usage (20 items packaging on some items).

Push-in range + Spring range

PI-Spring

Facilitate maintenance operations

Terminal blocks can be individually removed from a terminal assembly equipped with markers: TE Connectivity markers become independent after strip mounting. The markers remain on terminal in any situation.

Markers are interchangable: the smaller marker can fit any bigger block.

Maintenance operations facilitated

Reliable in harsh conditions

Qualified for worldwide markets, applications and for severe environments: vibration, shock, corrosion…

High corrosion resistance

PI-Spring clamp is made of high quality stainless steel.
Salt mist withstand up to 1,000 hours (as per IEC 60068).

1SNK162074S0201

2 Connections

Single deck
Feed-through
Ground
Disconnect
Fuse
Solar : 1500 VDC

NEW

3 Connections

Single deck
Feed-through
Ground
Solar: 1500 VDC

NEW

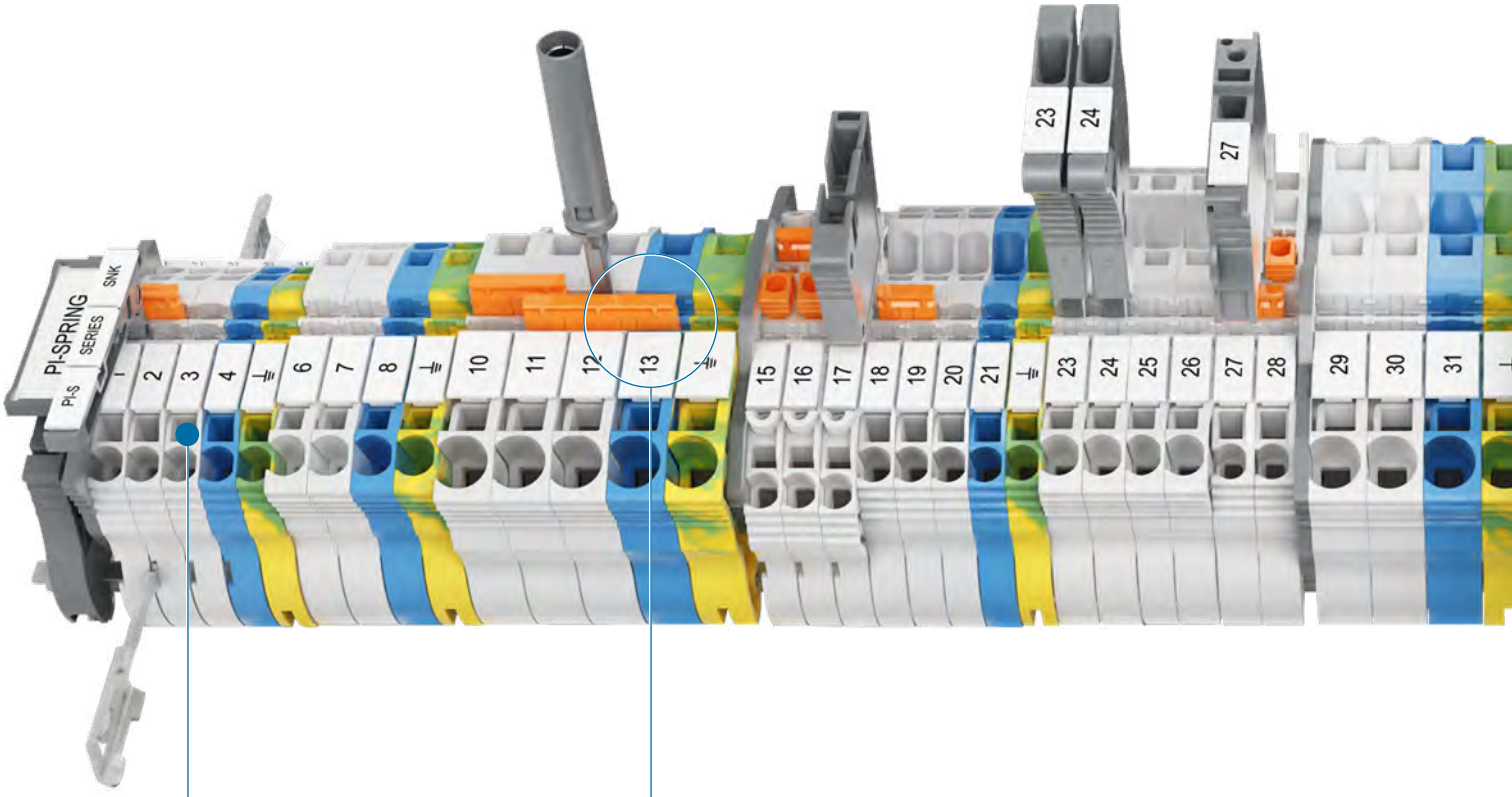

Voltage test
screwdriver entry point accepts Category II probes

Double central channels
allows multiconfigurations (jumpering, testing and measuring)

4 Connections

Single deck
Feed-through
Ground
Disconnect
Component holder

2x2 Connections

Double deck
Feed-through
Ground
Component holder

3x2 Connections

Triple deck
Feed-through
Ground

Two circuit separators
for the entire range

End section
can be used as circuit separator

Rotating label holder
easy plug-in in jumper channel

1SNK162068S0201 - Rév. A

Section		Feed-through			Ground			Component holder	
2.5 mm²	12 AWG	ZK2.5	ZK2.5-3P	ZK2.5-4P	ZK2.5-PE	ZK2.5-PE-3P	ZK2.5-PE 4P	ZK2.5-CH-4P-LR	ZK2.5-CH-4P-RL
4 mm²	10 AWG	ZK4	ZK4-3P	ZK4-4P	ZK4-PE	ZK4-PE-3P	ZK4-PE- 4P		
6 mm²	8 AWG	ZK6	ZK6-3P		ZK6-PE	ZK6-PE-3P			
10 mm²	6 AWG	ZK10	ZK10-3P		ZK10-PE	ZK10-PE-3P			
		ZK10-PV New	ZK10-3P-PV						
16 mm²	4 AWG	ZK16	ZK16-3P		ZK16-PE	ZK16-PE-3P			
		ZK16-PV New	ZK16-3P-PV						

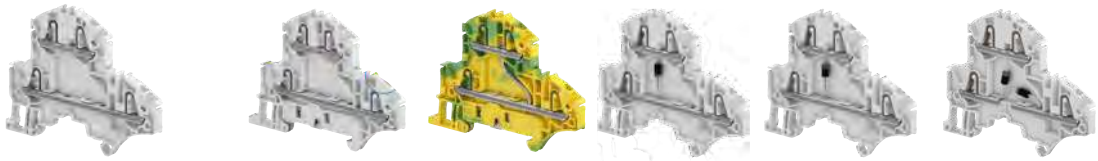

Double deck		Feed-through		Ground		Component holder		
Section								
2.5 mm²	12 AWG	ZK2.5-D2	ZK2.5-D1	ZK2.5-D2-PE	ZK2.5-D1-PE	ZK2.5-D-CH-UD	ZK2.5-D-CH-DU	ZK2.5-D-CH2-DU-RL

Triple deck		Feed-through		Ground	
Section					
2.5 mm²	12 AWG	ZK2.5-T3	ZK2.5-T1	ZK2.5-L-L-PE	ZK2.5-T1-PE
				ZK2.5-L-N-PE	

Disconnect		With blade		With plug		For 5x20 mm fuses		Aligned with ZK2.5-SF
Section								
2.5 mm²	12 AWG	ZK2.5-S	ZK2.5-S-4P	ZK2.5-SP	ZK2.5-SP-4P	ZK2.5-SF	ZK2.5-SF-R1	ZK2.5-S-R1
							ZK2.5-SF-R3	

Clamp - Channels for jumpering or testing - Test socket - Blown-fuse indicator

1SNK162020S0201 - Rev. B

ZK2.5 PI-Spring terminal blocks
Feed-through - 5.2 mm 0.205 in spacing

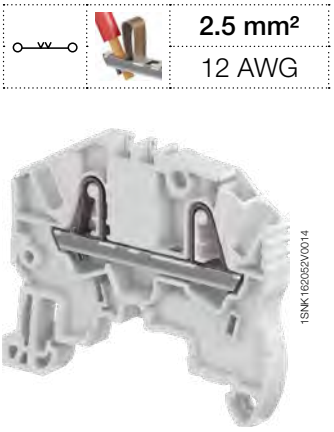

2.5 mm²
12 AWG

ZK2.5

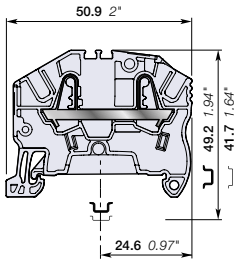

5.2 mm 0.205 in spacing

Description

Combine high performance with compact dimensions:
- 1000 V AC / DC IEC 600 V UL,
- Opt for the best marking visibility thanks to the up-front, flat marker zone, which lets you mark up to eight digits or increase the font size.

Ordering details

Description		Color	Type	Part Number		Pkg qty	Weight (1 pce) g
Feed-through	2 connections	Grey	ZK2.5	1SNK705010R0000		50	5.50
		Blue	ZK2.5-BL	1SNK705020R0000		50	5.50
		Orange	ZK2.5-OR	1SNK705030R0000		50	5.50
		Yellow	ZK2.5-YL	1SNK705060R0000		50	5.50
		Green	ZK2.5-GN	1SNK705061R0000		50	5.50
		Red	ZK2.5-RD	1SNK705062R0000		50	5.50
		White	ZK2.5-WH	1SNK705065R0000		50	5.50
		Black	ZK2.5-BK	1SNK705066R0000		50	5.50

Main technical data

Connecting capacity		IEC	UL - CSA
1 conductor per clamp	Rigid: Solid/Stranded	0.2 ... 4 mm²	26 ... 12 AWG
	Flexible without ferrule	0.22 ... 2.5 mm²	
	Flexible with non insulated ferrule	0.22 ... 2.5 mm²	26 ... 14 AWG
	Flexible with insulated ferrule	0.22 ... 2.5 mm²	26 ... 14 AWG
2 conductors per clamp	Flexible with twin ferrule	0.22 ... 0.5 mm²	26 ... 20 AWG
Rated current / Rated cross section		24 A / 2.5 mm²	20 A / 12 AWG
Rated short-time withstand current (1s)		300 A	396 A
Short Circuit Current Rating (with specific conditions)			100 kA
Rated voltage		1000 V	600 V
Impulse withstand voltage		8000 V	
Protection		IP20	NEMA 1
Increased safety Ex e		693 V 21 A IEC/EN 60079-7 - IM2 II 2 GD Ex eb I/IIC/IIIC	

The connecting capacity data for one Rigid: Solid/Stranded, or one Flexible conductor (when applicable) is a mandatory information required by IEC, UL and CSA standards (Copper conductors). All other data are provided as supplementary information only. For more details, please consult our CB, UL or CSA certificates and technical datasheet available on http://www.TE.com

CE, CB, RoHS, USR CNR, CSA, EAC Ex, ATEX, IECEx, Haz Loc, BV, DNV

Mounting instructions

Rail		TH 35-7.5, TH 35-15
Wire stripping length		11 mm 0.433 in
Tool (for flexible conductor without ferrule)		Flat screwdriver Ø 3.5 mm Ø 0.138 in

Accessories

	Description			Color	Type	Part Number		Pkg qty	Weight (1 pce) g
1	**End stops**	5.2 mm	0.205 in	Dark grey	BAZ1	1SNK900002R0000		50	5.30
2	**End sections**	2 mm	0.079 in	Dark grey	EK2.5	1SNK705910R0000		20	1.80
3	**Jumper bars**	2 poles	32 A (IEC)	Orange	JB5-2	1SNK905302R0000		50	1.30
		3 poles	32 A (IEC)		JB5-3	1SNK905303R0000		50	2.00
		4 poles	32 A (IEC)		JB5-4	1SNK905304R0000		50	2.70
		5 poles	32 A (IEC)		JB5-5	1SNK905305R0000		50	3.50
		10 poles	32 A (IEC)		JB5-10	1SNK905310R0000		30	7.10
		50 poles	32 A (IEC)		JB5-50	1SNK905350R0000		10	36.00
4	**Cross spacing jumpers**	3 poles	32 A (IEC)	Orange	JB85-3	1SNK900603R0000		10	2.80
5	**Circuit separators**	3 mm	0.118 in	Dark grey	CS-R2	1SNK900106R0000		20	3.80
6	**Test adapters**	For test plugs DIA 2 mm 0.079 in		Dark grey	TP2	1SNK900203R0000		20	1.70
		For test plugs DIA 4 mm 0.157 in			TP4	1SNK900205R0000		20	2.40
7	**Test connectors**	5.2 mm 0.205 in spacing		Dark grey	TC5	1SNK900200R0000		10	5.20
		End module, 5.2 mm 0.205 in			TC5-R1	1SNK900201R0000		10	5.20
8	**Shield connectors**				SHBP	1SNK900601R0000		20	4.10
9	**Terminal block markers**	Blank marker		White	MG-CPM 13 41790	1SNB041790R0512		1960	0.23
		Blank card			MC512	1SNK140000R0000		22	9.00
					MC512PA	1SNK149999R0000		20	10.00
		Universal wire markers holder		Grey	UMH	1SNK900611R0000		10	0.20

Complete list of accessories is indicated in the terminal block datasheet including end stops.
Some accessories such as jumper bars may modify the terminal block's ratings: Complete information available in the accessories section of the catalog.

Ground PI-Spring terminal blocks

Description		Color	Type	Part Number		Pkg qty	Weight (1 pce) g
Ground	Profile aligned with ZK2.5	Green-yellow	ZK2.5-PE	1SNK705150R0000		20	10.00

Technical data valid for copper conductors only.

1SNK162023S0201

ZK2.5-3P PI-Spring terminal blocks

Feed-through with 3 connections - 5.2 mm 0.205 in spacing

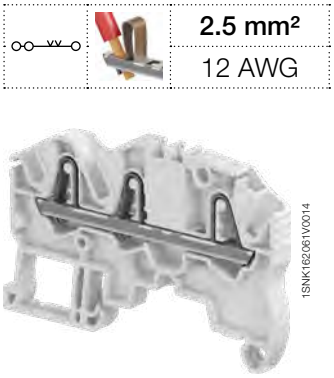

2.5 mm²
12 AWG

1SNK162061V0014

ZK2.5-3P

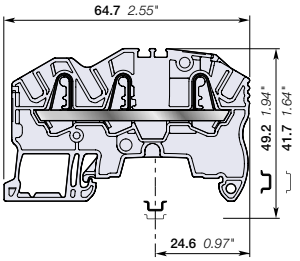

5.2 mm 0.205 in spacing

Description

Find all the features of the ZK2.5 terminal block with the added option of distributing or branching 3 conductors.

Ordering details

Description		Color	Type	Part Number		Pkg qty	Weight (1 pce) g
Feed-through	3 connections	Grey	ZK2.5-3P	1SNK705011R0000		50	7.40
		Blue	ZK2.5-3P-BL	1SNK705021R0000		50	7.40
		Orange	ZK2.5-3P-OR	1SNK705031R0000		50	7.40
		Yellow	ZK2.5-3P-YL	1SNK705067R0000		50	7.40
		Green	ZK2.5-3P-GN	1SNK705068R0000		50	7.40
		Red	ZK2.5-3P-RD	1SNK705069R0000		50	7.40
		White	ZK2.5-3P-WH	1SNK705072R0000		50	7.40
		Black	ZK2.5-3P-BK	1SNK705073R0000		50	7.40

Main technical data

Connecting capacity		IEC	UL - CSA
1 conductor per clamp	Rigid: Solid/Stranded	0.2 ... 4 mm²	26 ... 12 AWG
	Flexible without ferrule	0.22 ... 2.5 mm²	
	Flexible with non insulated ferrule	0.22 ... 2.5 mm²	26 ... 14 AWG
	Flexible with insulated ferrule	0.22 ... 2.5 mm²	26 ... 14 AWG
2 conductors per clamp	Flexible with twin ferrule	0.22 ... 0.5 mm²	26 ... 20 AWG
Rated current / Rated cross section		24 A / 2.5 mm²	20 A / 12 AWG
Rated short-time withstand current (1s)		300 A	396 A
Short Circuit Current Rating (with specific conditions)			100 kA
Rated voltage		1000 V	600 V
Impulse withstand voltage		8000 V	
Protection		IP20	NEMA 1
Increased safety Ex e		693 V 21 A IEC/EN 60079-7 - IM2 II 2 GD Ex eb I/IIC/IIIC	

Mounting instructions

Rail	TH 35-7.5, TH 35-15
Wire stripping length	11 mm 0.433 in
Tool (for flexible conductor without ferrule)	Flat screwdriver Ø 3.5 mm Ø 0.138 in

The connecting capacity data for one Rigid: Solid/Stranded, or one Flexible conductor (when applicable) is a mandatory information required by IEC, UL and CSA standards (Copper conductors). All other data are provided as supplementary information only. For more details, please consult our CB, UL or CSA certificates and technical datasheet available on http://www.TE.com

CE, CB, RoHS, USR CNR, CSA, EAC Ex, ATEX, IECEx, Haz Loc, BV, DNV

Accessories

	Description			Color	Type	Part Number		Pkg qty	Weight (1 pce) g
1	**End stops**	5.2 mm	0.205 in	Dark grey	BAZ1	1SNK900002R0000		50	5.30
2	**End sections**	2 mm	0.079 in	Dark grey	EK2.5-3P	1SNK705911R0000		20	2.40
3	**Jumper bars**	2 poles	32 A (IEC)	Orange	JB5-2	1SNK905302R0000		50	1.30
		3 poles	32 A (IEC)		JB5-3	1SNK905303R0000		50	2.00
		4 poles	32 A (IEC)		JB5-4	1SNK905304R0000		50	2.70
		5 poles	32 A (IEC)		JB5-5	1SNK905305R0000		50	3.50
		10 poles	32 A (IEC)		JB5-10	1SNK905310R0000		30	7.10
		50 poles	32 A (IEC)		JB5-50	1SNK905350R0000		10	36.00
4	**Cross spacing jumpers**	3 poles	32 A (IEC)	Orange	JB85-3	1SNK900603R0000		10	2.80
5	**Circuit separators**	3 mm	0.118 in	Dark grey	CS-R3	1SNK900107R0000		20	6.40
6	**Test adapters**	For test plugs DIA 2 mm 0.079 in		Dark grey	TP2	1SNK900203R0000		20	1.70
		For test plugs DIA 4 mm 0.157 in			TP4	1SNK900205R0000		20	2.40
7	**Test connectors**	5.2 mm 0.205 in spacing		Dark grey	TC5	1SNK900200R0000		10	5.20
		End module, 5.2 mm 0.205 in			TC5-R1	1SNK900201R0000		10	5.20
8	**Terminal block markers**	Blank marker		White	MG-CPM 13 41790	1SNB041790R0512		1960	0.23
		Blank card			MC512	1SNK140000R0000		22	9.00
					MC512PA	1SNK149999R0000		20	10.00
		Universal wire markers holder		Grey	UMH	1SNK900611R0000		10	0.20

Complete list of accessories is indicated in the terminal block datasheet including end stops.
Some accessories such as jumper bars may modify the terminal block's ratings: Complete information available in the accessories section of the catalog.

Ground PI-Spring terminal blocks

Description		Color	Type	Part Number		Pkg qty	Weight (1 pce) g
Ground	Profile aligned with ZK2.5-3P	Green-yellow	ZK2.5-PE-3P	1SNK705151R0000		20	11.90

1SNK162024S0201

Technical data valid for copper conductors only.

ZK2.5-4P PI-Spring terminal blocks

Feed-through with 4 connections - 5.2 mm 0.205 in spacing

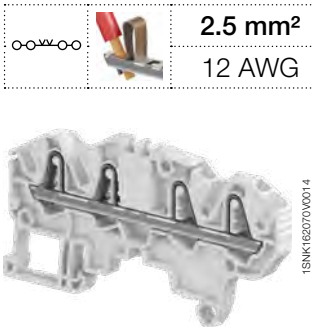

ZK2.5-4P

2.5 mm²
12 AWG

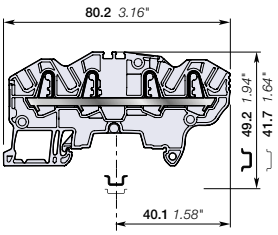

5.2 mm 0.205 in spacing

Description

Find all the features of the ZK2.5 terminal block with the added option of distributing or branching 4 conductors.

Ordering details

Description		Color	Type	Part Number		Pkg qty	Weight (1 pce) g
Feed-through	4 connections	Grey	ZK2.5-4P	1SNK705012R0000		50	9.00
		Blue	ZK2.5-4P-BL	1SNK705022R0000		50	9.00
		Orange	ZK2.5-4P-OR	1SNK705032R0000		50	9.00
		Yellow	ZK2.5-4P-YL	1SNK705074R0000		50	9.00
		Green	ZK2.5-4P-GN	1SNK705075R0000		50	9.00
		Red	ZK2.5-4P-RD	1SNK705076R0000		50	9.00
		White	ZK2.5-4P-WH	1SNK705079R0000		50	9.00
		Black	ZK2.5-4P-BK	1SNK705080R0000		50	9.00

Main technical data

Connecting capacity		IEC	UL - CSA
1 conductor per clamp	Rigid: Solid/Stranded	0.2 ... 4 mm²	26 ... 12 AWG
	Flexible without ferrule	0.22 ... 2.5 mm²	
	Flexible with non insulated ferrule	0.22 ... 2.5 mm²	26 ... 14 AWG
	Flexible with insulated ferrule	0.22 ... 2.5 mm²	26 ... 14 AWG
2 conductors per clamp	Flexible with twin ferrule	0.22 ... 0.5 mm²	26 ... 20 AWG
Rated current / Rated cross section		24 A / 2.5 mm²	20 A / 12 AWG
Rated short-time withstand current (1s)		300 A	396 A
Short Circuit Current Rating (with specific conditions)			100 kA
Rated voltage		1000 V	600 V
Impulse withstand voltage		8000 V	
Protection		IP20	NEMA 1
Increased safety Ex e		693 V 21 A IEC/EN 60079-7 - IM2 II 2 GD Ex eb I/IIC/IIIC	

Mounting instructions

Rail	TH 35-7.5, TH 35-15
Wire stripping length	11 mm 0.433 in
Tool (for flexible conductor without ferrule)	Flat screwdriver Ø 3.5 mm Ø 0.138 in

The connecting capacity data for one Rigid: Solid/Stranded, or one Flexible conductor (when applicable) is a mandatory information required by IEC, UL and CSA standards (Copper conductors). All other data are provided as supplementary information only. For more details, please consult our CB, UL or CSA certificates and technical datasheet available on http://www.TE.com

CE, CB, RoHS, USR CNR, CSA, EAC Ex, ATEX, IECEx, Haz Loc, BV, DNV

Accessories

	Description			Color	Type	Part Number		Pkg qty	Weight (1 pce) g
1	**End stops**	5.2 mm	0.205 in	Dark grey	BAZ1	1SNK900002R0000		50	5.30
2	**End sections**	2 mm	0.079 in	Dark grey	EK2.5-4P	1SNK705912R0000		20	2.70
3	**Jumper bars**	2 poles	32 A (IEC)	Orange	JB5-2	1SNK905302R0000		50	1.30
		3 poles	32 A (IEC)		JB5-3	1SNK905303R0000		50	2.00
		4 poles	32 A (IEC)		JB5-4	1SNK905304R0000		50	2.70
		5 poles	32 A (IEC)		JB5-5	1SNK905305R0000		50	3.50
		10 poles	32 A (IEC)		JB5-10	1SNK905310R0000		30	7.10
		50 poles	32 A (IEC)		JB5-50	1SNK905350R0000		10	36.00
4	**Cross spacing jumpers**	3 poles	32 A (IEC)	Orange	JB85-3	1SNK900603R0000		10	2.80
5	**Circuit separators**	3 mm	0.118 in	Dark grey	CS-R3	1SNK900107R0000		20	6.40
6	**Test adapters**	For test plugs DIA 2 mm 0.079 in		Dark grey	TP2	1SNK900203R0000		20	1.70
		For test plugs DIA 4 mm 0.157 in			TP4	1SNK900205R0000		20	2.40
7	**Test connectors**	5.2 mm 0.205 in spacing		Dark grey	TC5	1SNK900200R0000		10	5.20
		End module, 5.2 mm 0.205 in			TC5-R1	1SNK900201R0000		10	5.20
8	**Terminal block markers**	Blank marker		White	MG-CPM 13 41790	1SNB041790R0512		1960	0.23
		Blank card			MC512	1SNK140000R0000		22	9.00
					MC512PA	1SNK149999R0000		20	10.00
		Universal wire markers holder		Grey	UMH	1SNK900611R0000		10	0.20

Complete list of accessories is indicated in the terminal block datasheet including end stops.
Some accessories such as jumper bars may modify the terminal block's ratings: Complete information available in the accessories section of the catalog.

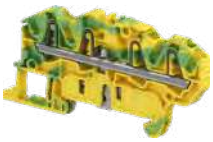

Ground PI-Spring terminal blocks

Description		Color	Type	Part Number		Pkg qty	Weight (1 pce) g
Ground	Profile aligned with ZK2.5-4P	Green-yellow	ZK2.5-PE-4P	1SNK705152R0000		20	13.60

1SNK162025S0201

Technical data valid for copper conductors only.

ZK4 PI-Spring terminal blocks
Feed-through - 6 mm 0.236 in spacing

ZK4

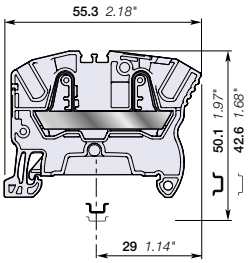

6 mm 0.236 in spacing

4 mm²
10 AWG

Description

Combine high performance with compact dimensions:
- 1000 V AC / DC IEC 600 V UL,
- Opt for the best marking visibility thanks to the up-front, flat marker zone, which lets you mark up to eight digits or increase the font size.

Ordering details

Description		Color	Type	Part Number		Pkg qty	Weight (1 pce) g
Feed-through	2 connections	Grey	ZK4	1SNK706010R0000		50	7.90
		Blue	ZK4-BL	1SNK706020R0000		50	7.90
		Orange	ZK4-OR	1SNK706030R0000		50	7.90
		Yellow	ZK4-YL	1SNK706060R0000		50	7.90
		Red	ZK4-RD	1SNK706062R0000		50	7.90
		Black	ZK4-BK	1SNK706066R0000		50	7.90

Main technical data

Connecting capacity		IEC	UL - CSA
1 conductor per clamp	Rigid: Solid/Stranded	0.5 ... 6 mm²	26 ... 10 AWG
	Flexible without ferrule	0.5 ... 4 mm²	
	Flexible with non insulated ferrule	0.5 ... 4 mm²	26 ... 12 AWG
	Flexible with insulated ferrule	0.5 ... 4 mm²	26 ... 12 AWG
2 conductors per clamp	Flexible with twin ferrule	0.5 ... 1 mm²	26 ... 18 AWG
Rated current / Rated cross section		32 A / 4 mm²	30 A / 10 AWG
Rated short-time withstand current (1s)		480 A	636 A
Short Circuit Current Rating (with specific conditions)			100 kA
Rated voltage		1000 V	600 V
Impulse withstand voltage		8000 V	
Protection		IP20	NEMA 1
Increased safety Ex e		693 V 29 A IEC/EN 60079-7 - IM2 II 2 GD Ex eb I/IIC/IIIC	

The connecting capacity data for one Rigid: Solid/Stranded, or one Flexible conductor (when applicable) is a mandatory information required by IEC, UL and CSA standards (Copper conductors). All other data are provided as supplementary information only. For more details, please consult our CB, UL or CSA certificates and technical datasheet available on http://www.TE.com

CE, CB, RoHS, USR CNR, CSA, EAC Ex, ATEX, IECEx, Haz Loc, BV, DNV

Mounting instructions

Rail	TH 35-7.5, TH 35-15
Wire stripping length	12.5 mm 0.492 in
Tool (for flexible conductor without ferrule)	Flat screwdriver Ø 3.5 mm Ø 0.138 in

Accessories

	Description			Color	Type	Part Number		Pkg qty	Weight (1 pce) g
1	**End stops**	5.2 mm	0.205 in	Dark grey	BAZ1	1SNK900002R0000		50	5.30
2	**End sections**	2 mm	0.079 in	Dark grey	EK2.5	1SNK705910R0000		20	1.80
3	**Jumper bars**	2 poles	41 A (IEC)	Orange	JB6-2	1SNK906302R0000		50	1.30
		3 poles	41 A (IEC)		JB6-3	1SNK906303R0000		50	2.10
		4 poles	41 A (IEC)		JB6-4	1SNK906304R0000		50	2.90
		5 poles	41 A (IEC)		JB6-5	1SNK906305R0000		50	3.60
		10 poles	41 A (IEC)		JB6-10	1SNK906310R0000		20	7.40
		50 poles	41 A (IEC)		JB6-50	1SNK906350R0000		10	38.10
4	**Cross spacing jumpers**	3 poles	32 A (IEC)	Orange	JB85-3	1SNK900603R0000		10	2.80
5	**Circuit separators**	3 mm	0.118 in	Dark grey	CS-R2	1SNK900106R0000		20	3.80
6	**Test adapters**	For test plugs DIA 2 mm 0.079 in		Dark grey	TP2	1SNK900203R0000		20	1.70
		For test plugs DIA 4 mm 0.157 in			TP4	1SNK900205R0000		20	2.40
7	**Test connectors**	End module, 5.2 mm 0.205 in		Dark grey	TC5-R1	1SNK900201R0000		10	5.20
8	**Spacers**	0.8 mm	0.031 in	Dark grey	ES-TC6	1SNK900105R0000		10	0.80
9	**Terminal block markers**	Blank marker		White	MG-CPM 13 41791	1SNB041791R0612		1680	0.27
		Blank card			MC612	1SNK150000R0000		22	10.00
					MC612PA	1SNK159999R0000		20	11.00
		Universal wire markers holder		Grey	UMH	1SNK900611R0000		10	0.20

Complete list of accessories is indicated in the terminal block datasheet including end stops.
Some accessories such as jumper bars may modify the terminal block's ratings: Complete information available in the accessories section of the catalog.

Ground PI-Spring terminal blocks

Description		Color	Type	Part Number		Pkg qty	Weight (1 pce) g
Ground	Profile aligned with ZK4	Green-yellow	ZK4-PE	1SNK706150R0000		20	12.60

1SNK162026S0201

Technical data valid for copper conductors only.

ZK4-3P PI-Spring terminal blocks

Feed-through with 3 connections - 6 mm 0.236 in spacing

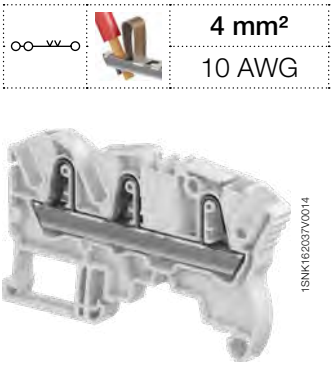

4 mm²	
10 AWG	

1SNK162037V0014

ZK4-3P

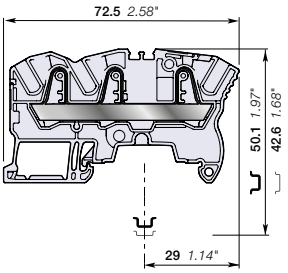

6 mm 0.236 in spacing

Description

Find all the features of the ZK4 terminal block with the added option of distributing or branching 3 conductors.

Ordering details

Description		Color	Type	Part Number		Pkg qty	Weight (1 pce) g
Feed-through	3 connections	Grey	ZK4-3P	1SNK706011R0000		50	11.00
		Blue	ZK4-3P-BL	1SNK706021R0000		50	11.00
		Orange	ZK4-3P-OR	1SNK706031R0000		50	11.00

Main technical data

Connecting capacity		IEC	UL - CSA
1 conductor per clamp	Rigid: Solid/Stranded	0.5 ... 6 mm²	26 ... 10 AWG
	Flexible without ferrule	0.5 ... 4 mm²	
	Flexible with non insulated ferrule	0.5 ... 4 mm²	26 ... 12 AWG
	Flexible with insulated ferrule	0.5 ... 4 mm²	26 ... 12 AWG
2 conductors per clamp	Flexible with twin ferrule	0.5 ... 1 mm²	26 ... 18 AWG
Rated current / Rated cross section		32 A / 4 mm²	30 A / 10 AWG
Rated short-time withstand current (1s)		480 A	636 A
Short Circuit Current Rating (with specific conditions)			100 kA
Rated voltage		1000 V	600 V
Impulse withstand voltage		8000 V	
Protection		IP20	NEMA 1
Increased safety Ex e		693 V 29 A IEC/EN 60079-7 - IM2 II 2 GD Ex eb I/IIC/IIIC	

Mounting instructions

Rail	TH 35-7.5, TH 35-15
Wire stripping length	12.5 mm 0.492 in
Tool (for flexible conductor without ferrule)	Flat screwdriver Ø 3.5 mm Ø 0.138 in

The connecting capacity data for one Rigid: Solid/Stranded, or one Flexible conductor (when applicable) is a mandatory information required by IEC, UL and CSA standards (Copper conductors). All other data are provided as supplementary information only. For more details, please consult our CB, UL or CSA certificates and technical datasheet available on http://www.TE.com

CE, CB, RoHS, USR CNR, CSA, EAC Ex, ATEX, IECEx, Haz Loc, BV, DNV

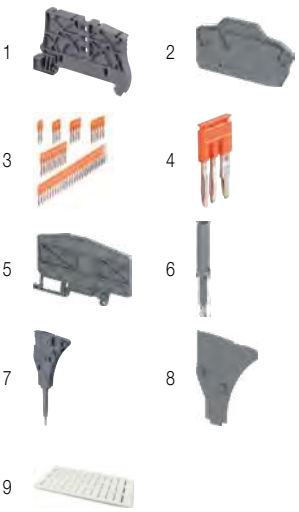

Accessories

	Description			Color	Type	Part Number		Pkg qty	Weight (1 pce) g
1	**End stops**	5.2 mm	0.205 in	Dark grey	BAZ1	1SNK900002R0000		50	5.30
2	**End sections**	2 mm	0.079 in	Dark grey	EK2.5-3P	1SNK705911R0000		20	2.40
3	**Jumper bars**	2 poles	41 A (IEC)	Orange	JB6-2	1SNK906302R0000		50	1.30
		3 poles	41 A (IEC)		JB6-3	1SNK906303R0000		50	2.10
		4 poles	41 A (IEC)		JB6-4	1SNK906304R0000		50	2.90
		5 poles	41 A (IEC)		JB6-5	1SNK906305R0000		50	3.60
		10 poles	41 A (IEC)		JB6-10	1SNK906310R0000		20	7.40
		50 poles	41 A (IEC)		JB6-50	1SNK906350R0000		10	38.10
4	**Cross spacing jumpers**	3 poles	32 A (IEC)	Orange	JB85-3	1SNK900603R0000		10	2.80
5	**Circuit separators**	3 mm	0.118 in	Dark grey	CS-R3	1SNK900107R0000		20	6.40
6	**Test adapters**	For test plugs DIA 2 mm 0.079 in		Dark grey	TP2	1SNK900203R0000		20	1.70
		For test plugs DIA 4 mm 0.157 in			TP4	1SNK900205R0000		20	2.40
7	**Test connectors**	End module, 5.2 mm 0.205 in		Dark grey	TC5-R1	1SNK900201R0000		10	5.20
8	**Spacers**	0.8 mm	0.031 in	Dark grey	ES-TC6	1SNK900105R0000		10	0.80
9	**Terminal block markers**	Blank marker		White	MG-CPM 13 41791	1SNB041791R0612		1680	0.27
		Blank card			MC612	1SNK150000R0000		22	10.00
					MC612PA	1SNK159999R0000		20	11.00
		Universal wire markers holder		Grey	UMH	1SNK900611R0000		10	0.20

Complete list of accessories is indicated in the terminal block datasheet including end stops.
Some accessories such as jumper bars may modify the terminal block's ratings: Complete information available in the accessories section of the catalog.

Ground PI-Spring terminal blocks

Description		Color	Type	Part Number		Pkg qty	Weight (1 pce) g
Ground	Profile aligned with ZK4-3P	Green-yellow	ZK4-PE-3P	1SNK706151R0000		20	15.70

1SNK162027S0201

Technical data valid for copper conductors only.

ZK4-4P PI-Spring terminal blocks

Feed-through with 4 connections - 6 mm 0.236 in spacing

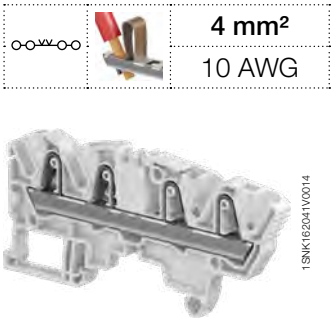

ZK4-4P

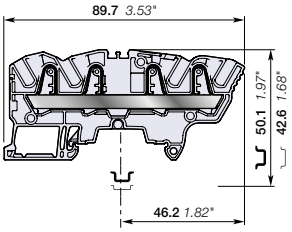

6 mm 0.236 in spacing

4 mm²
10 AWG

Description

Find all the features of the ZK4 terminal block with the added option of distributing or branching 4 conductors.

Ordering details

Description		Color	Type	Part Number		Pkg qty	Weight (1 pce) g
Feed-through	4 connections	Grey	ZK4-4P	1SNK706012R0000		50	13.80
		Blue	ZK4-4P-BL	1SNK706022R0000		50	13.80
		Orange	ZK4-4P-OR	1SNK706032R0000		50	13.80

Main technical data

Connecting capacity		IEC	UL - CSA
1 conductor per clamp	Rigid: Solid/Stranded	0.5 ... 6 mm²	26 ... 10 AWG
	Flexible without ferrule	0.5 ... 4 mm²	
	Flexible with non insulated ferrule	0.5 ... 4 mm²	26 ... 12 AWG
	Flexible with insulated ferrule	0.5 ... 4 mm²	26 ... 12 AWG
2 conductors per clamp	Flexible with twin ferrule	0.5 ... 1 mm²	26 ... 18 AWG
Rated current / Rated cross section		32 A / 4 mm²	30 A / 10 AWG
Rated short-time withstand current (1s)		480 A	636 A
Short Circuit Current Rating (with specific conditions)			100 kA
Rated voltage		1000 V	600 V
Impulse withstand voltage		8000 V	
Protection		IP20	NEMA 1
Increased safety Ex e		693 V 29 A IEC/EN 60079-7 - IM2 II 2 GD Ex eb I/IIC/IIIC	

Mounting instructions

Rail		TH 35-7.5, TH 35-15
Wire stripping length		12.5 mm 0.492 in
Tool (for flexible conductor without ferrule)		Flat screwdriver Ø 3.5 mm Ø 0.138 in

The connecting capacity data for one Rigid: Solid/Stranded, or one Flexible conductor (when applicable) is a mandatory information required by IEC, UL and CSA standards (Copper conductors). All other data are provided as supplementary information only. For more details, please consult our CB, UL or CSA certificates and technical datasheet available on http://www.TE.com

CE, CB, RoHS, USR CNR, CSA, EAC Ex, ATEX, IECEx, Haz Loc, BV, DNV

Accessories

	Description			Color	Type	Part Number		Pkg qty	Weight (1 pce) g
1	**End stops**	5.2 mm	0.205 in	Dark grey	BAZ1	1SNK900002R0000		50	5.30
2	**End sections**	2 mm	0.079 in	Dark grey	EK2.5-4P	1SNK705912R0000		20	2.70
3	**Jumper bars**	2 poles	41 A (IEC)	Orange	JB6-2	1SNK906302R0000		50	1.30
		3 poles	41 A (IEC)		JB6-3	1SNK906303R0000		50	2.10
		4 poles	41 A (IEC)		JB6-4	1SNK906304R0000		50	2.90
		5 poles	41 A (IEC)		JB6-5	1SNK906305R0000		50	3.60
		10 poles	41 A (IEC)		JB6-10	1SNK906310R0000		20	7.40
		50 poles	41 A (IEC)		JB6-50	1SNK906350R0000		10	38.10
4	**Cross spacing jumpers**	3 poles	32 A (IEC)	Orange	JB85-3	1SNK900603R0000		10	2.80
5	**Circuit separators**	3 mm	0.118 in	Dark grey	CS-R3	1SNK900107R0000		20	6.40
6	**Test adapters**	For test plugs DIA 2 mm 0.079 in		Dark grey	TP2	1SNK900203R0000		20	1.70
		For test plugs DIA 4 mm 0.157 in			TP4	1SNK900205R0000		20	2.40
7	**Test connectors**	End module, 5.2 mm 0.205 in		Dark grey	TC5-R1	1SNK900201R0000		10	5.20
8	**Spacers**	0.8 mm	0.031 in	Dark grey	ES-TC6	1SNK900105R0000		10	0.80
9	**Terminal block markers**	Blank marker		White	MG-CPM 13 41791	1SNB041791R0612		1680	0.27
		Blank card			MC612	1SNK150000R0000		22	10.00
					MC612PA	1SNK159999R0000		20	11.00
		Universal wire markers holder		Grey	UMH	1SNK900611R0000		10	0.20

Complete list of accessories is indicated in the terminal block datasheet including end stops.
Some accessories such as jumper bars may modify the terminal block's ratings: Complete information available in the accessories section of the catalog.

Ground PI-Spring terminal blocks

Description		Color	Type	Part Number		Pkg qty	Weight (1 pce) g
Ground	Profile aligned with ZK4-4P	Green-yellow	ZK4-PE-4P	1SNK706152R0000		20	18.40

1SNK162028S0201

Technical data valid for copper conductors only.

ZK6 PI-Spring terminal blocks
Feed-through - 8 mm 0.315 in spacing

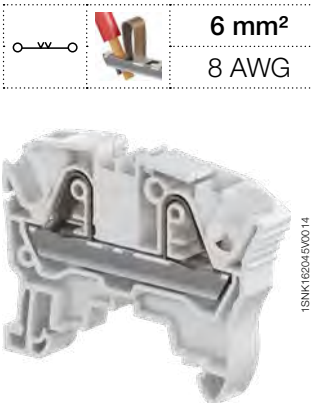

6 mm²
8 AWG

1SNK162045V0014

ZK6

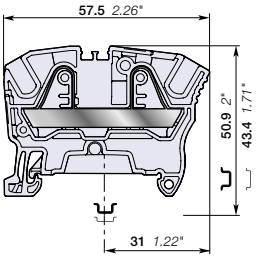

8 mm 0.315 in spacing

Description

Combine high performance with compact dimensions:
- 1000 V AC / DC IEC 600 V UL,
- Opt for the best marking visibility thanks to the up-front, flat marker zone, which lets you mark up to eight digits or increase the font size.

Ordering details

Description		Color	Type	Part Number		Pkg qty	Weight (1 pce) g
Feed-through	2 connections	Grey	ZK6	1SNK708010R0000		50	11.80
		Blue	ZK6-BL	1SNK708020R0000		50	11.80
		Orange	ZK6-OR	1SNK708030R0000		50	11.80
		Yellow	ZK6-YL	1SNK708060R0000		50	11.80
		Red	ZK6-RD	1SNK708062R0000		50	11.80
		Black	ZK6-BK	1SNK708066R0000		50	11.80

Main technical data

Connecting capacity		IEC	UL - CSA
1 conductor per clamp	Rigid: Solid/Stranded	0.5 ... 10 mm²	24 ... 8 AWG
	Flexible without ferrule	0.5 ... 6 mm²	
	Flexible with non insulated ferrule	0.5 ... 6 mm²	24 ... 10 AWG
	Flexible with insulated ferrule	0.5 ... 6 mm²	24 ... 10 AWG
2 conductors per clamp	Flexible with twin ferrule	0.5 ... 1.5 mm²	24 ... 16 AWG
Rated current / Rated cross section		41 A / 6 mm²	50 A / 8 AWG
Rated short-time withstand current (1s)		720 A	1008 A
Short Circuit Current Rating (with specific conditions)			100 kA
Rated voltage		1000 V	600 V
Impulse withstand voltage		8000 V	
Protection		IP20	NEMA 1
Increased safety Ex e		693 V 37 A IEC/EN 60079-7 - IM2 II 2 GD Ex eb I/IIC/IIIC	

The connecting capacity data for one Rigid: Solid/Stranded, or one Flexible conductor (when applicable) is a mandatory information required by IEC, UL and CSA standards (Copper conductors). All other data are provided as supplementary information only. For more details, please consult our CB, UL or CSA certificates and technical datasheet available on http://www.TE.com

CE, CB, RoHS, USR CNR, CSA, EAC Ex, ATEX, IECEx, Haz Loc, BV, DNV

Mounting instructions

Rail		TH 35-7.5, TH 35-15
Wire stripping length		12.5 mm 0.492 in
Tool (for flexible conductor without ferrule)		Flat screwdriver Ø 3.5 mm Ø 0.138 in

Accessories

	Description			Color	Type	Part Number		Pkg qty	Weight (1 pce) g
1	**End stops**	5.2 mm	0.205 in	Dark grey	BAZ1	1SNK900002R0000		50	5.30
2	**End sections**	2 mm	0.079 in	Dark grey	EK2.5	1SNK705910R0000		20	1.80
3	**Jumper bars**	2 poles	57 A (IEC)	Orange	JB8-2	1SNK908302R0000		50	2.70
		3 poles	57 A (IEC)		JB8-3	1SNK908303R0000		50	4.10
		4 poles	57 A (IEC)		JB8-4	1SNK908304R0000		50	5.60
		5 poles	57 A (IEC)		JB8-5	1SNK908305R0000		40	7.00
		10 poles	57 A (IEC)		JB8-10	1SNK908310R0000		20	14.20
4	**Cross spacing jumpers**	3 poles	32 A (IEC)	Orange	JB85-3	1SNK900603R0000		10	2.80
5	**Circuit separators**	3 mm	0.118 in	Dark grey	CS-R2	1SNK900106R0000		20	3.80
6	**Test adapters**	For test plugs DIA 2 mm 0.079 in		Dark grey	TP2	1SNK900203R0000		20	1.70
		For test plugs DIA 4 mm 0.157 in			TP4	1SNK900205R0000		20	2.40
7	**Test connectors**	End module, 5.2 mm 0.205 in		Dark grey	TC5-R1	1SNK900201R0000		10	5.20
8	**Spacers**	2.8 mm	0.110 in	Dark grey	ES-TC8	1SNK900104R0000		10	1.40
9	**Terminal block markers**	Blank marker		White	MG-CPM 13 41791	1SNB041791R0612		1680	0.27
		Blank card			MC812	1SNK160000R0000		22	10.00
					MC812PA	1SNK169999R0000		20	14.00
		Universal wire markers holder		Grey	UMH	1SNK900611R0000		10	0.20

Complete list of accessories is indicated in the terminal block datasheet including end stops.
Some accessories such as jumper bars may modify the terminal block's ratings: Complete information available in the accessories section of the catalog.

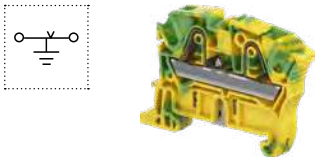

Ground PI-Spring terminal blocks

Description		Color	Type	Part Number		Pkg qty	Weight (1 pce) g
Ground	Profile aligned with ZK6	Green-yellow	ZK6-PE	1SNK708150R0000		20	20.30

1SNK162029S0201

Technical data valid for copper conductors only.

ZK6-3P PI-Spring terminal blocks

Feed-through with 3 connections - 8 mm 0.315 in spacing

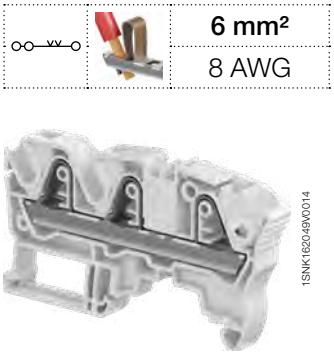

1SNK162049V0014

ZK6-3P

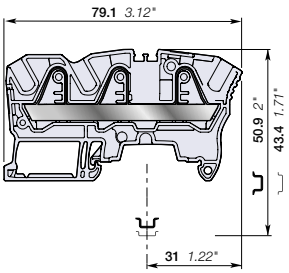

8 mm 0.315 in spacing

	6 mm²
	8 AWG

Description

Find all the features of the ZK6 terminal block with the added option of distributing or branching 3 conductors.

Ordering details

Description		Color	Type	Part Number		Pkg qty	Weight (1 pce) g
Feed-through	3 connections	Grey	ZK6-3P	1SNK708011R0000		50	16.70
		Blue	ZK6-3P-BL	1SNK708021R0000		50	16.70
		Orange	ZK6-3P-OR	1SNK708031R0000		50	16.70

Main technical data

Connecting capacity		IEC	UL - CSA
1 conductor per clamp	Rigid: Solid/Stranded	0.5 ... 10 mm²	24 ... 8 AWG
	Flexible without ferrule	0.5 ... 6 mm²	
	Flexible with non insulated ferrule	0.5 ... 6 mm²	24 ... 10 AWG
	Flexible with insulated ferrule	0.5 ... 6 mm²	24 ... 10 AWG
2 conductors per clamp	Flexible with twin ferrule	0.5 ... 1.5 mm²	24 ... 16 AWG
Rated current / Rated cross section		41 A / 6 mm²	50 A / 8 AWG
Rated short-time withstand current (1s)		720 A	1008 A
Short Circuit Current Rating (with specific conditions)			100 kA
Rated voltage		1000 V	600 V
Impulse withstand voltage		8000 V	
Protection		IP20	NEMA 1
Increased safety Ex e		693 V 37 A IEC/EN 60079-7 - IM2 II 2 GD Ex eb I/IIC/IIIC	

Mounting instructions

Rail		TH 35-7.5, TH 35-15
Wire stripping length		12.5 mm 0.492 in
Tool (for flexible conductor without ferrule)		Flat screwdriver Ø 3.5 mm Ø 0.138 in

The connecting capacity data for one Rigid: Solid/Stranded, or one Flexible conductor (when applicable) is a mandatory information required by IEC, UL and CSA standards (Copper conductors). All other data are provided as supplementary information only. For more details, please consult our CB, UL or CSA certificates and technical datasheet available on http://www.TE.com

CE, CB, RoHS, USR CNR, CSA, EAC Ex, ATEX, IECEx, Haz Loc, BV, DNV

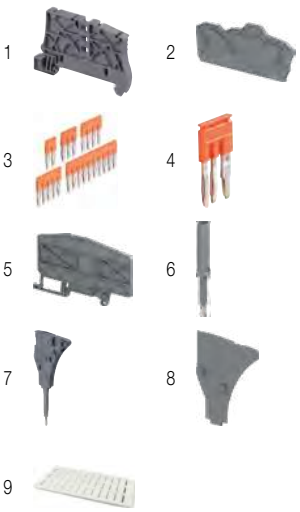

Accessories

	Description			Color	Type	Part Number		Pkg qty	Weight (1 pce) g
1	**End stops**	5.2 mm	0.205 in	Dark grey	BAZ1	1SNK900002R0000		50	5.30
2	**End sections**	2 mm	0.079 in	Dark grey	EK6-3P	1SNK708911R0000		20	2.80
3	**Jumper bars**	2 poles	57 A (IEC)	Orange	JB8-2	1SNK908302R0000		50	2.70
		3 poles	57 A (IEC)		JB8-3	1SNK908303R0000		50	4.10
		4 poles	57 A (IEC)		JB8-4	1SNK908304R0000		50	5.60
		5 poles	57 A (IEC)		JB8-5	1SNK908305R0000		40	7.00
		10 poles	57 A (IEC)		JB8-10	1SNK908310R0000		20	14.20
4	**Cross spacing jumpers**	3 poles	32 A (IEC)	Orange	JB85-3	1SNK900603R0000		10	2.80
5	**Circuit separators**	3 mm	0.118 in	Dark grey	CS-R3	1SNK900107R0000		20	6.40
6	**Test adapters**	For test plugs DIA 2 mm 0.079 in		Dark grey	TP2	1SNK900203R0000		20	1.70
		For test plugs DIA 4 mm 0.157 in			TP4	1SNK900205R0000		20	2.40
7	**Test connectors**	End module, 5.2 mm 0.205 in		Dark grey	TC5-R1	1SNK900201R0000		10	5.20
8	**Spacers**	2.8 mm	0.110 in	Dark grey	ES-TC8	1SNK900104R0000		10	1.40
9	**Terminal block markers**	Blank marker		White	MG-CPM 13 41791	1SNB041791R0612		1680	0.27
		Blank card			MC812	1SNK160000R0000		22	10.00
					MC812PA	1SNK169999R0000		20	14.00
		Universal wire markers holder		Grey	UMH	1SNK900611R0000		10	0.20

Complete list of accessories is indicated in the terminal block datasheet including end stops.
Some accessories such as jumper bars may modify the terminal block's ratings: Complete information available in the accessories section of the catalog.

Ground PI-Spring terminal blocks

Description		Color	Type	Part Number		Pkg qty	Weight (1 pce) g
Ground	Profile aligned with ZK6-3P	Green-yellow	ZK6-PE-3P	1SNK708151R0000		20	21.50

1SNK162030S0201

Technical data valid for copper conductors only.

ZK10 PI-Spring terminal blocks
Feed-through - 10 mm 0.394 in spacing

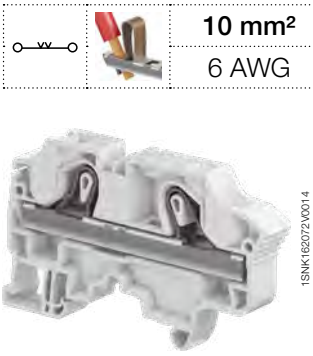

ZK10

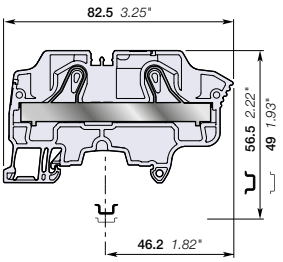

10 mm 0.394 in spacing

10 mm²
6 AWG

Description

Combine high performance with compact dimensions:
- 1000 V AC / DC IEC 600 V UL,
- Opt for the best marking visibility thanks to the up-front, flat marker zone, which lets you mark up to eight digits or increase the font size.

Ordering details

Description		Color	Type	Part Number		Pkg qty	Weight (1 pce) g
Feed-through	2 connections	Grey	ZK10	1SNK710010R0000		20	27.20
		Blue	ZK10-BL	1SNK710020R0000		20	27.20
		Orange	ZK10-OR	1SNK710030R0000		20	27.20

Main technical data

Connecting capacity		IEC	UL - CSA
1 conductor per clamp	Rigid: Solid/Stranded	0.5 ... 16 mm²	20 ... 6 AWG
	Flexible without ferrule	0.5 ... 10 mm²	
	Flexible with non insulated ferrule	0.5 ... 10 mm²	20 ... 8 AWG
	Flexible with insulated ferrule	0.5 ... 10 mm²	20 ... 8 AWG
2 conductors per clamp	Flexible with twin ferrule	0.5 ... 4 mm²	20 ... 12 AWG
Rated current / Rated cross section		57 A / 10 mm²	55 A / 6 AWG
Rated short-time withstand current (1s)		1200 A	1596 A
Short Circuit Current Rating (with specific conditions)			100 kA
Rated voltage		1000 V	600 V
Impulse withstand voltage		8000 V	
Protection		IP20	NEMA 1
Increased safety Ex e		693 V 51 A IEC/EN 60079-7 - IM2 II 2 GD Ex eb I/IIC/IIIC	

Mounting instructions

Rail		TH 35-7.5, TH 35-15
Wire stripping length		15 mm 0.591 in
Tool (for flexible conductor without ferrule)		Flat screwdriver Ø 4 mm Ø 0.157 in

The connecting capacity data for one Rigid: Solid/Stranded, or one Flexible conductor (when applicable) is a mandatory information required by IEC, UL and CSA standards (Copper conductors). All other data are provided as supplementary information only. For more details, please consult our CB, UL or CSA certificates and technical datasheet available on http://www.TE.com

CE, CB, RoHS, USR CNR, CSA, EAC Ex, ATEX, IECEx, Haz Loc, BV, DNV

Accessories

	Description			Color	Type	Part Number		Pkg qty	Weight (1 pce) g
1	**End stops**	5.2 mm	0.205 in	Dark grey	BAZ1	1SNK900002R0000		50	5.30
2	**End sections**	2 mm	0.079 in	Dark grey	EK10	1SNK710910R0000		20	3.30
3	**Jumper bars**	2 poles	76 A (IEC)	Orange	JB10-2	1SNK910302R0000		50	4.60
		3 poles	76 A (IEC)		JB10-3	1SNK910303R0000		50	7.10
		4 poles	76 A (IEC)		JB10-4	1SNK910304R0000		40	9.40
		5 poles	76 A (IEC)		JB10-5	1SNK910305R0000		30	12.00
		10 poles	76 A (IEC)		JB10-10	1SNK910310R0000		20	24.00
4	**Circuit separators**	3 mm	0.118 in	Dark grey	CS-R3	1SNK900107R0000		20	6.40
5	**Test adapters**	For test plugs DIA 2 mm 0.079 in		Dark grey	TP2	1SNK900203R0000		20	1.70
		For test plugs DIA 4 mm 0.157 in			TP4	1SNK900205R0000		20	2.40
6	**Terminal block markers**	Blank marker		White	MG-CPM 13 41791	1SNB041791R0612		1680	0.27
		Blank card			MC812	1SNK160000R0000		22	10.00
					MC812PA	1SNK169999R0000		20	14.00
		Universal wire markers holder		Grey	UMH	1SNK900611R0000		10	0.20

Complete list of accessories is indicated in the terminal block datasheet including end stops.
Some accessories such as jumper bars may modify the terminal block's ratings: Complete information available in the accessories section of the catalog.

Ground PI-Spring terminal blocks

Description		Color	Type	Part Number		Pkg qty	Weight (1 pce) g
Ground	Profile aligned with ZK10	Green-yellow	ZK10-PE	1SNK710150R0000		20	36.20

Technical data valid for copper conductors only.

1SNK162031S0201

ZK10-PV PI-Spring terminal blocks
Feed-through - 12 mm 0.472 in spacing

10 mm²
6 AWG

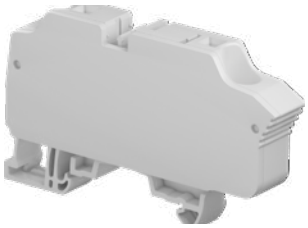
1SNK162124V0014

ZK10-PV

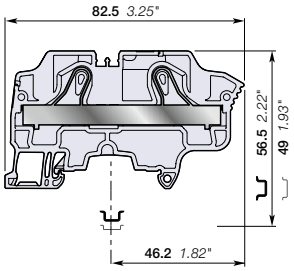

12 mm 0.472 in spacing

Description
Specially designed for high voltage utility scale solar power plants:
- Rated voltage of 1500 V DC IEC and 1000 V DC UL,
- Pre-mounted end section with light grey color specific to this application,
- Improved design with ribs to increase creepage distance,
- Compact solution only 2 mm thicker than normal product,
- Compatible with JB12 jumpers to interconnect multiple terminal blocks.

Ordering details

Description		Color	Type	Part Number		Pkg qty	Weight (1 pce) g
Feed-through	2 connections	Grey	ZK10-PV	1SNK710063R0000		20	29.86
		Blue	ZK10-PV-BL	1SNK710065R0000		20	29.86

Main technical data

Connecting capacity		IEC	UL - CSA
1 conductor per clamp	Rigid: Solid/Stranded	0.5 ... 16 mm²	20 ... 6 AWG
	Flexible without ferrule	0.5 ... 10 mm²	
	Flexible with non insulated ferrule	0.5 ... 10 mm²	20 ... 8 AWG
	Flexible with insulated ferrule	0.5 ... 10 mm²	20 ... 8 AWG
2 conductors per clamp	Flexible with twin ferrule	0.5 ... 4 AWG	20 ... 12 AWG
Rated current / Rated cross section		57 A / 10 mm²	55 A / 6 AWG
Rated short-time withstand current (1s)		1200 A	1596 A
Short Circuit Current Rating (with specific conditions)			100 kA
Rated voltage		1000 V AC / 1500 V DC	1000 V
Impulse withstand voltage		8000 V	
Protection		IP20	NEMA 1

Mounting instructions

Rail		TH 35-7.5, TH 35-15
Wire stripping length		15 mm 0.591 in
Tool (for flexible conductor without ferrule)		Flat screwdriver Ø 4 mm Ø 0.157 in

The connecting capacity data for one Rigid: Solid/Stranded, or one Flexible conductor (when applicable) is a mandatory information required by IEC, UL and CSA standards (Copper conductors). All other data are provided as supplementary information only. For more details, please consult our CB, UL or CSA certificates and technical datasheet available on http://www.TE.com

CE CB RoHS USR CNR CSA EAC

Accessories

	Description			Color	Type	Part Number		Pkg qty	Weight (1 pce) g
1	**End stops**	5.2 mm	0.205 in	Dark grey	BAZ1	1SNK900002R0000		50	5.30
2	**Jumper bars**	2 poles	76 A (IEC)	Orange	JB12-2	1SNK912302R0000		50	4.90
		3 poles	76 A (IEC)		JB12-3	1SNK912303R0000		50	7.60
		5 poles	76 A (IEC)		JB12-5	1SNK912305R0000		20	12.90
3	**Circuit separators**	3 mm	0.118 in	Dark grey	CS-R3	1SNK900107R0000		20	6.40
4	**Test adapters**	For test plugs DIA 2 mm 0.079 in		Dark grey	TP2	1SNK900203R0000		20	1.70
		For test plugs DIA 4 mm 0.157 in			TP4	1SNK900205R0000		20	2.40
5	**Terminal block markers**	Blank card		White	MC812	1SNK160000R0000		22	10.00
					MC812PA	1SNK169999R0000		20	14.00
		Blank marker			MG-CPM 13 41791	1SNB041791R0612		1680	0.273
		Universal wire markers holder		Grey	UMH	1SNK900611R0000		10	0.20

Complete list of accessories is indicated in the terminal block datasheet including end stops. Some accessories such as jumper bars may modify the terminal block's ratings: Complete information available in the accessories section of the catalog.

Ground PI-Spring terminal blocks

Description		Color	Type	Part Number		Pkg qty	Weight (1 pce) g
Ground	Profile aligned with ZK10	Green-yellow	ZK10-PE	1SNK710150R0000		20	36.20

1SNK162080S0201

Technical data valid for copper conductors only.

ZK10-3P PI-Spring terminal blocks

Feed-through with 3 connections - 10 mm 0.394 in spacing

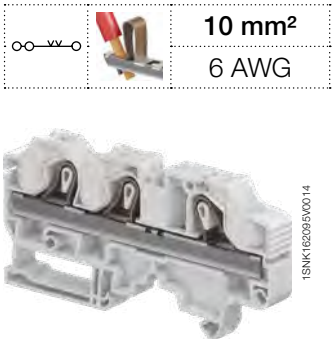

10 mm²
6 AWG

1SNK162095V0014

ZK10-3P

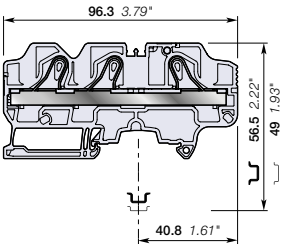

10 mm 0.394 in spacing

Description

- Find all the features of the ZK10 terminal block with the added option of distributing or branching 3 conductors,
- ZK10-3P is perfectly adapted to solar applications: 1250 V DC (1000 V AC) IEC, 1000 V UL.

Ordering details

Description		Color	Type	Part Number		Pkg qty	Weight (1 pce) g
Feed-through	3 connections	Grey	ZK10-3P	1SNK710011R0000		20	34.9
		Blue	ZK10-3P-BL	1SNK710021R0000		20	34.9

Main technical data

Connecting capacity		IEC	UL - CSA
1 conductor per clamp	Rigid: Solid/Stranded	0.5 ... 16 mm²	20 ... 6 AWG
	Flexible without ferrule	0.5 ... 10 mm²	
	Flexible with non insulated ferrule	0.5 ... 10 mm²	20 ... 8 AWG
	Flexible with insulated ferrule	0.5 ... 10 mm²	20 ... 8 AWG
2 conductors per clamp	Flexible with twin ferrule	0.5 ... 4 mm²	20 ... 12 AWG
Rated current / Rated cross section		57 A / 10 mm²	56 A / 6 AWG
Rated short-time withstand current (1s)		1200 A	
Short Circuit Current Rating (with specific conditions)			100 kA
Rated voltage		1000 V	1000 V
Impulse withstand voltage		8000 V	
Protection		IP20	NEMA 1
Increased safety Ex e		693 V 57 A - IM2 II 2 GD Ex eb I/II/IIIC	

Mounting instructions

Rail		TH 35-7.5, TH 35-15
Wire stripping length		15 mm 0.591 in
Tool (for flexible conductor without ferrule)		Flat screwdriver Ø 4 mm Ø 0.157 in

The connecting capacity data for one Rigid: Solid/Stranded, or one Flexible conductor (when applicable) is a mandatory information required by IEC, UL and CSA standards (Copper conductors).
All other data are provided as supplementary information only. For more details, please consult our CB, UL or CSA certificates and technical datasheet available on http://www.TE.com

CE, CB, RoHS, USR CNR, CSA, EAC Ex, ATEX, IECEx, BV

Accessories

	Description			Color	Type	Part Number		Pkg qty	Weight (1 pce) g
1	**End stops**	5.2 mm	0.205 in	Dark grey	BAZ1	1SNK900002R0000		50	5.30
2	**End sections**	2 mm	0.079 in	Dark grey	EK10-3P	1SNK710911R0000		20	4.5
3	**Jumper bars**	2 poles	76 A (IEC)	Orange	JB10-2	1SNK910302R0000		50	4.60
		3 poles	76 A (IEC)		JB10-3	1SNK910303R0000		50	7.10
		4 poles	76 A (IEC)		JB10-4	1SNK910304R0000		40	9.40
		5 poles	76 A (IEC)		JB10-5	1SNK910305R0000		30	12.00
		10 poles	76 A (IEC)		JB10-10	1SNK910310R0000		20	24.00
4	**Test adapters**	For test plugs DIA 2 mm 0.079 in		Dark grey	TP2	1SNK900203R0000		20	1.70
		For test plugs DIA 4 mm 0.157 in			TP4	1SNK900205R0000		20	2.40
5	**Terminal block markers**	Blank marker		White	MG-CPM 13 41791	1SNB041791R0612		1680	0.27
		Blank card			MC812	1SNK160000R0000		22	10.00
					MC812PA	1SNK169999R0000		20	14.00
		Universal wire markers holder		Grey	UMH	1SNK900611R0000		10	0.20

Complete list of accessories is indicated in the terminal block datasheet including end stops.
Some accessories such as jumper bars may modify the terminal block's ratings: Complete information available in the accessories section of the catalog.

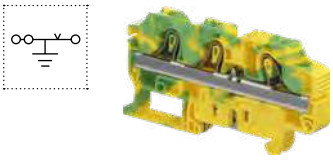

Ground PI-Spring terminal blocks

Description		Color	Type	Part Number		Pkg qty	Weight (1 pce) g
Ground	Profile aligned with ZK10-3P	Green-yellow	ZK10-PE-3P	1SNK710151R0000		20	43.3

1SNK162061S0201

Technical data valid for copper conductors only.

ZK10-3P-PV PI-Spring terminal blocks

Feed-through with 3 connections - 12 mm 0.472 in spacing

10 mm²

6 AWG

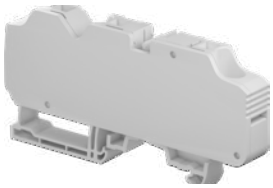

1SNK162126V0014

ZK10-3P-PV

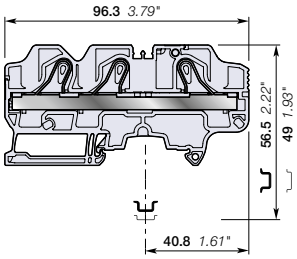

12 mm 0.472 in spacing

Description

Specially designed for high voltage utility scale solar power plants:

- Rated voltage of 1500 V DC IEC and 1000 V DC UL,
- Pre-mounted end section with light grey color specific to this application,
- Improved design with ribs to increase creepage distance,
- Compact solution only 2 mm thicker than normal product,
- 3 connections configuration for easy grouping: 2 inputs / 1 output or 1 input / 2 outputs,
- Compatible with JB12 jumpers to interconnect multiple terminal blocks.

Description		Color	Type	Part Number		Pkg qty	Weight (1 pce) g
Feed-through	3 connections	Grey	ZK10-3P-PV	1SNK710064R0000		20	38.61
		Blue	ZK10-3P-PV-BL	1SNK710067R0000		20	38.61

Main technical data

Connecting capacity		IEC	UL - CSA
1 conductor per clamp	Rigid: Solid/Stranded	0.5 ... 16 mm²	20 ... 6 AWG
	Flexible without ferrule	0.5 ... 10 mm²	
	Flexible with non insulated ferrule	0.5 ... 10 mm²	20 ... 8 AWG
	Flexible with insulated ferrule	0.5 ... 10 mm²	20 ... 8 AWG
2 conductors per clamp	Flexible with twin ferrule	0.5 ... 4 AWG	20 ... 12 AWG
Rated current / Rated cross section		57 A / 10 mm²	56 A / 6 AWG
Rated short-time withstand current (1s)		1200 A	1596 A
Short Circuit Current Rating (with specific conditions)			100 kA
Rated voltage		1000 V AC / 1500 V DC	1000 V
Impulse withstand voltage		8000 V	
Protection		IP20	NEMA 1

Mounting instructions

Rail		TH 35-7.5, TH 35-15
Wire stripping length		15 mm 0.591 in
Tool (for flexible conductor without ferrule)		Flat screwdriver Ø 4 mm Ø 0.157 in

The connecting capacity data for one Rigid: Solid/Stranded, or one Flexible conductor (when applicable) is a mandatory information required by IEC, UL and CSA standards (Copper conductors). All other data are provided as supplementary information only. For more details, please consult our CB, UL or CSA certificates and technical datasheet available on http://www.TE.com

CE CB RoHS USR CNR CSA EAC

Accessories

	Description			Color	Type	Part Number		Pkg qty	Weight (1 pce) g
1	End stops	5.2 mm	0.205 in	Dark grey	BAZ1	1SNK900002R0000		50	5.30
2	Jumper bars	2 poles	76 A (IEC)	Orange	JB12-2	1SNK912302R0000		50	4.90
		3 poles	76 A (IEC)		JB12-3	1SNK912303R0000		50	7.60
		5 poles	76 A (IEC)		JB12-5	1SNK912305R0000		20	12.90
3	Circuit separators	3 mm	0.118 in	Dark grey	CS-R3	1SNK900107R0000		20	6.40
4	Test adapters	For test plugs DIA 2 mm 0.079 in		Dark grey	TP2	1SNK900203R0000		20	1.70
		For test plugs DIA 4 mm 0.157 in			TP4	1SNK900205R0000		20	2.40
5	Terminal block markers	Blank card		White	MC812	1SNK160000R0000		22	10.00
					MC812PA	1SNK169999R0000		20	14.00
		Blank marker			MG-CPM 13 41791	1SNB041791R0612		1680	0.273
		Universal wire markers holder		Grey	UMH	1SNK900611R0000		10	0.20

Complete list of accessories is indicated in the terminal block datasheet including end stops. Some accessories such as jumper bars may modify the terminal block's ratings: Complete information available in the accessories section of the catalog.

Ground PI-Spring terminal blocks

Description		Color	Type	Part Number		Pkg qty	Weight (1 pce) g
Ground	Profile aligned with ZK10-3P	Green-yellow	ZK10-PE-3P	1SNK710151R0000		20	43.3

1SNK162081S0201

Technical data valid for copper conductors only.

ZK16 PI-Spring terminal blocks
Feed-through - 12 mm 0.472 in spacing

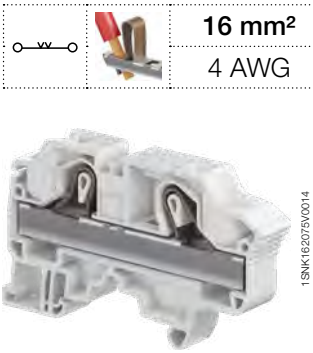

ZK16

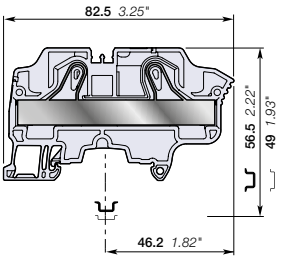

12 mm 0.472 in spacing

	16 mm²
	4 AWG

Description

Combine high performance with compact dimensions:
- 1000 V AC / DC IEC 600 V UL,
- Opt for the best marking visibility thanks to the up-front, flat marker zone, which lets you mark up to eight digits or increase the font size.

Ordering details

Description		Color	Type	Part Number		Pkg qty	Weight (1 pce) g
Feed-through	2 connections	Grey	ZK16	1SNK712010R0000		20	33.80
		Blue	ZK16-BL	1SNK712020R0000		20	33.80

Main technical data

Connecting capacity		IEC	UL - CSA
1 conductor per clamp	Rigid: Solid/Stranded	0.5 ... 25 mm²	20 ... 4 AWG
	Flexible without ferrule	0.5 ... 16 mm²	
	Flexible with non insulated ferrule	0.5 ... 16 mm²	20 ... 6 AWG
	Flexible with insulated ferrule	0.5 ... 16 mm²	20 ... 6 AWG
2 conductors per clamp	Flexible with twin ferrule	0.5 ... 6 mm²	20 ... 10 AWG
Rated current / Rated cross section		76 A / 16 mm²	75 A / 4 AWG
Rated short-time withstand current (1s)		1920 A	2544 A
Short Circuit Current Rating (with specific conditions)			100 kA
Rated voltage		1000 V	600 V
Impulse withstand voltage		8000 V	
Protection		IP20	NEMA 1
Increased safety Ex e		693 V 69 A IEC/EN 60079-7 - IM2 II 2 GD Ex eb I/IIC/IIIC	

The connecting capacity data for one Rigid: Solid/Stranded, or one Flexible conductor (when applicable) is a mandatory information required by IEC, UL and CSA standards (Copper conductors). All other data are provided as supplementary information only. For more details, please consult our CB, UL or CSA certificates and technical datasheet available on http://www.TE.com

CE, CB, RoHS, USR CNR, CSA, EAC Ex, ATEX, IECEx, Haz Loc, BV, DNV

Mounting instructions

Rail		TH 35-7.5, TH 35-15
Wire stripping length		15 mm 0.591 in
Tool (for flexible conductor without ferrule)		Flat screwdriver Ø 4 mm Ø 0.157 in

2

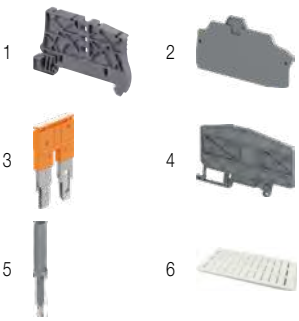

Accessories

	Description			Color	Type	Part Number		Pkg qty	Weight (1 pce) g
1	**End stops**	5.2 mm	0.205 in	Dark grey	BAZ1	1SNK900002R0000		50	5.30
2	**End sections**	2 mm	0.079 in	Dark grey	EK10	1SNK710910R0000		20	3.30
3	**Jumper bars**	2 poles	76 A (IEC)	Orange	JB12-2	1SNK912302R0000		50	4.90
		3 poles	76 A (IEC)		JB12-3	1SNK912303R0000		50	7.60
		5 poles	76 A (IEC)		JB12-5	1SNK912305R0000		20	12.90
4	**Circuit separators**	3 mm	0.118 in	Dark grey	CS-R3	1SNK900107R0000		20	6.40
5	**Test adapters**	For test plugs DIA 2 mm 0.079 in		Dark grey	TP2	1SNK900203R0000		20	1.70
		For test plugs DIA 4 mm 0.157 in			TP4	1SNK900205R0000		20	2.40
6	**Terminal block markers**	Blank marker		White	MG-CPM 13 41791	1SNB041791R0612		1680	0.27
		Blank card			MC812	1SNK160000R0000		22	10.00
					MC812PA	1SNK169999R0000		20	14.00
		Universal wire markers holder		Grey	UMH	1SNK900611R0000		10	0.20

Complete list of accessories is indicated in the terminal block datasheet including end stops.
Some accessories such as jumper bars may modify the terminal block's ratings: Complete information available in the accessories section of the catalog.

Ground PI-Spring terminal blocks

Description		Color	Type	Part Number		Pkg qty	Weight (1 pce) g
Ground	Profile aligned with ZK16	Green-yellow	ZK16-PE	1SNK712150R0000		20	47.00

1SNK162032S0201

Technical data valid for copper conductors only.

ZK16-PV PI-Spring terminal blocks
Feed-through - 14 mm 0.551 in spacing

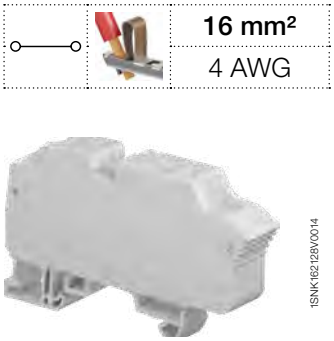

1SNK162128V0014

ZK16-PV

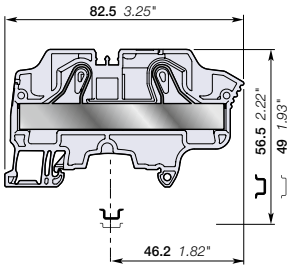

14 mm 0.551 in spacing

16 mm²
4 AWG

Description

Specially designed for high voltage utility scale solar power plants:
- Rated voltage of 1500 V DC IEC and 1000 V DC UL,
- Pre-mounted end section with light grey color specific to this application,
- Improved design with ribs to increase creepage distance,
- Compact solution only 2 mm thicker than normal product,
- No available jumpers for ZK16-PV and ZK16-3P-PV (14 mm spacing).

Ordering details

Description		Color	Type	Part Number		Pkg qty	Weight (1 pce) g
Feed-through	2 connections	Grey	ZK16-PV	1SNK712063R0000		15	36.56
		Blue	ZK16-PV-BL	1SNK712065R0000		15	36.56

Main technical data

Connecting capacity		IEC	UL - CSA
1 conductor per clamp	Rigid: Solid/Stranded	0.5 ... 25 mm²	20 ... 4 AWG
	Flexible without ferrule	0.5 ... 16 mm²	
	Flexible with non insulated ferrule	0.5 ... 16 mm²	20 ... 6 AWG
	Flexible with insulated ferrule	0.5 ... 16 mm²	20 ... 6 AWG
2 conductors per clamp	Flexible with twin ferrule	0.5 ... 6 AWG	20 ... 10 AWG
Rated current / Rated cross section		76 A / 16 mm²	75 A / 4 AWG
Rated short-time withstand current (1s)		1920 A	2544 A
Short Circuit Current Rating (with specific conditions)			100 kA
Rated voltage		1000 V AC / 1500 V DC	1000 V
Impulse withstand voltage		8000 V	
Protection		IP20	NEMA 1

Mounting instructions

Rail	TH 35-7.5, TH 35-15
Wire stripping length	15 mm 0.591 in
Tool (for flexible conductor without ferrule)	Flat screwdriver Ø 4 mm Ø 0.157 in

The connecting capacity data for one Rigid: Solid/Stranded, or one Flexible conductor (when applicable) is a mandatory information required by IEC, UL and CSA standards (Copper conductors). All other data are provided as supplementary information only. For more details, please consult our CB, UL or CSA certificates and technical datasheet available on http://www.TE.com

CE CB RoHS USR CNR CSA EAC

Accessories

	Description			Color	Type	Part Number		Pkg qty	Weight (1 pce) g
1	**End stops**	5.2 mm	0.205 in	Dark grey	BAZ1	1SNK900002R0000		50	5.30
2	**Circuit separators**	3 mm	0.118 in	Dark grey	CS-R3	1SNK900107R0000		20	6.40
3	**Test adapters**	For test plugs DIA 2 mm 0.079 in		Dark grey	TP2	1SNK900203R0000		20	1.70
		For test plugs DIA 4 mm 0.157 in			TP4	1SNK900205R0000		20	2.40
4	**Terminal block markers**	Blank card		White	MC812	1SNK160000R0000		22	10.00
					MC812PA	1SNK169999R0000		20	14.00
		Blank marker			MG-CPM 13 41791	1SNB041791R0612		1680	0.273
		Universal wire markers holder		Grey	UMH	1SNK900611R0000		10	0.20

Complete list of accessories is indicated in the terminal block datasheet including end stops. Some accessories such as jumper bars may modify the terminal block's ratings: Complete information available in the accessories section of the catalog.

Ground PI-Spring terminal blocks

Description		Color	Type	Part Number		Pkg qty	Weight (1 pce) g
Ground	Profile aligned with ZK16	Green-yellow	ZK16-PE	1SNK712150R0000		20	47.00

1SNK162082S0201

Technical data valid for copper conductors only.

ZK16-3P PI-Spring terminal blocks

Feed-through with 3 connections - 12 mm 0.472 in spacing

16 mm²
4 AWG

1SNK162098V0014

ZK16-3P

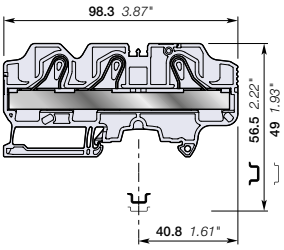

12 mm 0.472 in spacing

Description

- Find all the features of the ZK16 terminal block with the added option of distributing or branching 3 conductors,
- ZK16-3P is perfectly adapted to solar applications: 1250 V DC (1000 V AC) IEC, 1000 V UL.

Ordering details

Description		Color	Type	Part Number		Pkg qty	Weight (1 pce) g
Feed-through	3 connections	Grey	ZK16-3P	1SNK712011R0000		20	44.3
		Blue	ZK16-3P-BL	1SNK712021R0000		20	44.3

Main technical data

Connecting capacity		IEC	UL - CSA
1 conductor per clamp	Rigid: Solid/Stranded	0.5 ... 25 mm²	20 ... 4 AWG
	Flexible without ferrule	0.5 ... 16 mm²	
	Flexible with non insulated ferrule	0.5 ... 16 mm²	20 ... 6 AWG
	Flexible with insulated ferrule	0.5 ... 16 mm²	20 ... 6 AWG
2 conductors per clamp	Flexible with twin ferrule	0.5 ... 6 mm²	20 ... 10 AWG
Rated current / Rated cross section		76 A / 16 mm²	75 A / 4 AWG
Rated short-time withstand current (1s)		1920 A	
Short Circuit Current Rating (with specific conditions)			100 kA
Rated voltage		1000 V	1000 V
Impulse withstand voltage		8000 V	
Protection		IP20	NEMA 1
Increased safety Ex e		693 V 76 A - IM2 II 2 GD Ex eb I/II/IIIC	

Mounting instructions

Rail		TH 35-7.5, TH 35-15
Wire stripping length		15 mm 0.591 in
Tool (for flexible conductor without ferrule)		Flat screwdriver Ø 4 mm Ø 0.157 in

The connecting capacity data for one Rigid: Solid/Stranded, or one Flexible conductor (when applicable) is a mandatory information required by IEC, UL and CSA standards (Copper conductors). All other data are provided as supplementary information only. For more details, please consult our CB, UL or CSA certificates and technical datasheet available on http://www.TE.com

CE, CB, RoHS, USR CNR, CSA, EAC Ex, ATEX, IECEx, BV

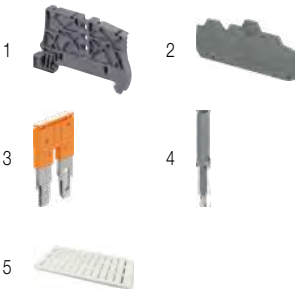

Accessories

	Description			Color	Type	Part Number		Pkg qty	Weight (1 pce) g
1	**End stops**	5.2 mm	0.205 in	Dark grey	BAZ1	1SNK900002R0000		50	5.30
2	**End sections**	2 mm	0.079 in	Dark grey	EK10-3P	1SNK710911R0000		20	4.5
3	**Jumper bars**	2 poles	76 A (IEC)	Orange	JB12-2	1SNK912302R0000		50	4.90
		3 poles	76 A (IEC)		JB12-3	1SNK912303R0000		50	7.60
		5 poles	76 A (IEC)		JB12-5	1SNK912305R0000		20	12.90
4	**Test adapters**	For test plugs DIA 2 mm 0.079 in		Dark grey	TP2	1SNK900203R0000		20	1.70
		For test plugs DIA 4 mm 0.157 in			TP4	1SNK900205R0000		20	2.40
5	**Terminal block markers**	Blank marker		White	MG-CPM 13 41791	1SNB041791R0612		1680	0.27
		Blank card			MC812	1SNK160000R0000		22	10.00
					MC812PA	1SNK169999R0000		20	14.00
		Universal wire markers holder		Grey	UMH	1SNK900611R0000		10	0.20

Complete list of accessories is indicated in the terminal block datasheet including end stops.
Some accessories such as jumper bars may modify the terminal block's ratings: Complete information available in the accessories section of the catalog.

Ground PI-Spring terminal blocks

Description		Color	Type	Part Number		Pkg qty	Weight (1 pce) g
Ground	Profile aligned with ZK16-3P	Green-yellow	ZK16-PE-3P	1SNK712151R0000		20	56.65

1SNK162063S0201

Technical data valid for copper conductors only.

ZK16-3P-PV PI-Spring terminal blocks

Feed-through with 3 connections - 14 mm 0.551 in spacing

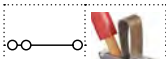

16 mm²
4 AWG

1SNK162130V0014

ZK16-3P-PV

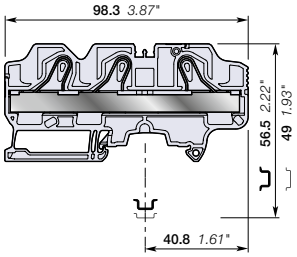

14 mm 0.551 in spacing

Description

Specially designed for high voltage utility scale solar power plants:
- Rated voltage of 1500 V DC IEC and 1000 V DC UL,
- Pre-mounted end section with light grey color specific to this application,
- Improved design with ribs to increase creepage distance,
- Compact solution only 2 mm thicker than normal product,
- 3 connections configuration for easy grouping: 2 inputs / 1 output or 1 input / 2 outputs,
- No available jumpers for ZK16-PV and ZK16-3P-PV (14 mm spacing).

Ordering details

Description		Color	Type	Part Number		Pkg qty	Weight (1 pce) g
Feed-through	3 connections	Grey	ZK16-3P-PV	1SNK712064R0000		15	48.01
		Blue	ZK16-3P-PV-BL	1SNK712067R0000		15	48.01

Main technical data

Connecting capacity		IEC	UL - CSA
1 conductor per clamp	Rigid: Solid/Stranded	0.5 ... 25 mm²	20 ... 4 AWG
	Flexible without ferrule	0.5 ... 16 mm²	
	Flexible with non insulated ferrule	0.5 ... 16 mm²	20 ... 6 AWG
	Flexible with insulated ferrule	0.5 ... 16 mm²	20 ... 6 AWG
2 conductors per clamp	Flexible with twin ferrule	0.5 ... 6 AWG	20 ... 10 AWG
Rated current / Rated cross section		76 A / 16 mm²	75 A / 4 AWG
Rated short-time withstand current (1s)		1920 A	2544 A
Short Circuit Current Rating (with specific conditions)			100 kA
Rated voltage		1000 V AC / 1500 V DC	1000 V
Impulse withstand voltage		8000 V	
Protection		IP20	NEMA 1

Mounting instructions

Rail		TH 35-7.5, TH 35-15
Wire stripping length		15 mm 0.591 in
Tool (for flexible conductor without ferrule)		Flat screwdriver Ø 4 mm Ø 0.157 in

The connecting capacity data for one Rigid: Solid/Stranded, or one Flexible conductor (when applicable) is a mandatory information required by IEC, UL and CSA standards (Copper conductors). All other data are provided as supplementary information only. For more details, please consult our CB, UL or CSA certificates and technical datasheet available on http://www.TE.com

CE CB RoHS USR CNR CSA EAC

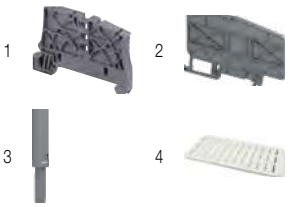

Accessories

	Description			Color	Type	Part Number		Pkg qty	Weight (1 pce) g
1	**End stops**	5.2 mm	0.205 in	Dark grey	BAZ1	1SNK900002R0000		50	5.30
2	**Circuit separators**	3 mm	0.118 in	Dark grey	CS-R3	1SNK900107R0000		20	6.40
3	**Test adapters**	For test plugs DIA 2 mm 0.079 in		Dark grey	TP2	1SNK900203R0000		20	1.70
		For test plugs DIA 4 mm 0.157 in			TP4	1SNK900205R0000		20	2.40
4	**Terminal block markers**	Blank card		White	MC812	1SNK160000R0000		22	10.00
					MC812PA	1SNK169999R0000		20	14.00
		Blank marker			MG-CPM 13 41791	1SNB041791R0612		1680	0.273
		Universal wire markers holder		Grey	UMH	1SNK900611R0000		10	0.20

Complete list of accessories is indicated in the terminal block datasheet including end stops.
Some accessories such as jumper bars may modify the terminal block's ratings: Complete information available in the accessories section of the catalog.

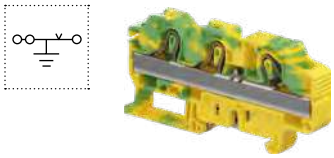

Ground PI-Spring terminal blocks

Description		Color	Type	Part Number		Pkg qty	Weight (1 pce) g
Ground	Profile aligned with ZK16-3P	Green-yellow	ZK16-PE-3P	1SNK712151R0000		20	56.65

1SNK162083S0201

Technical data valid for copper conductors only.

ZK2.5-PE PI-Spring terminal blocks
Ground - 5.2 mm 0.205 in spacing

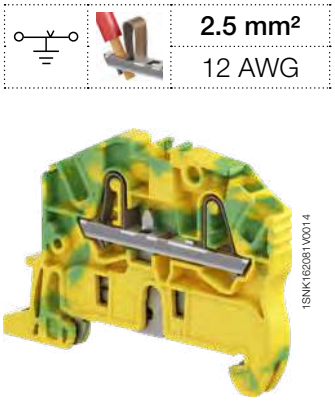

2.5 mm²	
12 AWG	

ZK2.5-PE

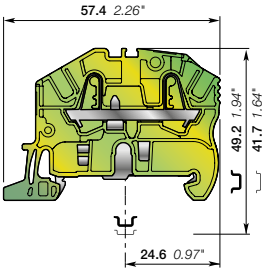

5.2 mm 0.205 in spacing

Description

Improve the safety of your installation in the event of a short-circuit thanks to our screwless rail contact:
- Rail contact non operator dependent,
- Performances above the requirements of the IEC 60947-7-2 terminal block standard,
- Secured snap on or off the rail,
- Profile aligned with ZK2.5.

Ordering details

Description		Color	Type	Part Number		Pkg qty	Weight (1 pce) g
Ground	2 connections	Green-yellow	ZK2.5-PE	1SNK705150R0000		20	10.00

Main technical data

Connecting capacity		IEC	UL - CSA
1 conductor per clamp	Rigid: Solid/Stranded	0.2 ... 4 mm²	26 ... 12 AWG
	Flexible without ferrule	0.22 ... 2.5 mm²	
	Flexible with non insulated ferrule	0.22 ... 2.5 mm²	26 ... 14 AWG
	Flexible with insulated ferrule	0.22 ... 2.5 mm²	26 ... 14 AWG
Rated cross section		2.5 mm²	12 AWG
Rated short-time withstand current (1s)		300 A	396 A
Protection		IP20	NEMA 1
Explosive atmosphere classification		IM2 II 2 GD Ex eb I/IIC/IIIC – Class I, Zone 1, AEx e II, Ex e II U	

Mounting instructions

Rail	TH 35-7.5, TH 35-15
Wire stripping length	11 mm 0.433 in
Tool (for flexible conductor without ferrule)	Flat screwdriver Ø 3.5 mm Ø 0.138 in

The connecting capacity data for one Rigid: Solid/Stranded, or one Flexible conductor (when applicable) is a mandatory information required by IEC, UL and CSA standards (Copper conductors). All other data are provided as supplementary information only. For more details, please consult our CB, UL or CSA certificates and technical datasheet available on http://www.TE.com

CE | CB | RoHS | USR CNR | CSA | EAC Ex | ATEX | IECEx | Haz Loc | BV | DNV

Accessories

	Description			Color	Type	Part Number		Pkg qty	Weight (1 pce) g
1	**End stops**	5.2 mm	0.205 in	Dark grey	BAZ1	1SNK900002R0000		50	5.30
2	**End sections**	2 mm	0.079 in	Dark grey	EK2.5	1SNK705910R0000		20	1.80
3	**Circuit separators**	3 mm	0.118 in	Dark grey	CS-R2	1SNK900106R0000		20	3.80
4	**Terminal block markers**	Blank marker		White	MG-CPM 13 41790	1SNB041790R0512		1960	0.23
		Blank card			MC512	1SNK140000R0000		22	9.00
					MC512PA	1SNK149999R0000		20	10.00
		Universal wire markers holder		Grey	UMH	1SNK900611R0000		10	0.20

Complete list of accessories is indicated in the terminal block datasheet including end stops.
Some accessories such as jumper bars may modify the terminal block's ratings: Complete information available in the accessories section of the catalog.

1SNK162039S0201

Technical data valid for copper conductors only.

ZK2.5-PE-3P PI-Spring terminal blocks

Ground with 3 connections - 5.2 mm 0.205 in spacing

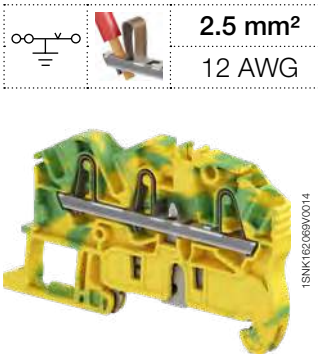

ZK2.5-PE-3P

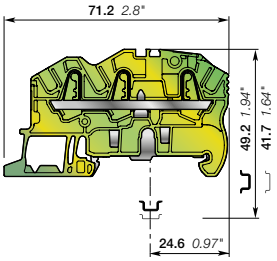

5.2 mm 0.205 in spacing

	2.5 mm²
	12 AWG

Description

Improve the safety of your installation in the event of a short-circuit thanks to our screwless rail contact:

- Rail contact non operator dependent,
- Performances above the requirements of the IEC 60947-7-2 terminal block standard,
- Secured snap on or off the rail,
- Profile aligned with ZK2.5-3P.

Ordering details

Description		Color	Type	Part Number		Pkg qty	Weight (1 pce) g
Ground	3 connections	Green-yellow	ZK2.5-PE-3P	1SNK705151R0000		20	11.90

Main technical data

Connecting capacity		IEC	UL - CSA
1 conductor per clamp	Rigid: Solid/Stranded	0.2 ... 4 mm²	26 ... 12 AWG
	Flexible without ferrule	0.22 ... 2.5 mm²	
	Flexible with non insulated ferrule	0.22 ... 2.5 mm²	26 ... 14 AWG
	Flexible with insulated ferrule	0.22 ... 2.5 mm²	26 ... 14 AWG
Rated cross section		2.5 mm²	12 AWG
Rated short-time withstand current (1s)		300 A	396 A
Protection		IP20	NEMA 1
Explosive atmosphere classification		IM2 II 2 GD Ex eb I/IIC/IIIC – Class I, Zone 1, AEx e II, Ex e II U	

Mounting instructions

Rail	TH 35-7.5, TH 35-15
Wire stripping length	11 mm 0.433 in
Tool (for flexible conductor without ferrule)	Flat screwdriver Ø 3.5 mm Ø 0.138 in

The connecting capacity data for one Rigid: Solid/Stranded, or one Flexible conductor (when applicable) is a mandatory information required by IEC, UL and CSA standards (Copper conductors). All other data are provided as supplementary information only. For more details, please consult our CB, UL or CSA certificates and technical datasheet available on http://www.TE.com

CE | CB | RoHS | USR CNR | CSA | EAC Ex | ATEX | IECEx | Haz Loc | BV | DNV

Accessories

	Description			Color	Type	Part Number		Pkg qty	Weight (1 pce) g
1	**End stops**	5.2 mm	0.205 in	Dark grey	BAZ1	1SNK900002R0000		50	5.30
2	**End sections**	2 mm	0.079 in	Dark grey	EK2.5-3P	1SNK705911R0000		20	2.40
3	**Circuit separators**	3 mm	0.118 in	Dark grey	CS-R3	1SNK900107R0000		20	6.40
4	**Terminal block markers**	Blank marker		White	MG-CPM 13 41790	1SNB041790R0512		1960	0.23
		Blank card			MC512	1SNK140000R0000		22	9.00
					MC512PA	1SNK149999R0000		20	10.00
		Universal wire markers holder		Grey	UMH	1SNK900611R0000		10	0.20

Complete list of accessories is indicated in the terminal block datasheet including end stops.
Some accessories such as jumper bars may modify the terminal block's ratings: Complete information available in the accessories section of the catalog.

1SNK162040S0201

Technical data valid for copper conductors only.

ZK2.5-PE-4P PI-Spring terminal blocks

Ground with 4 connections - 5.2 mm 0.205 in spacing

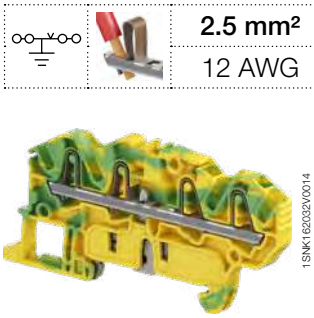

ZK2.5-PE-4P

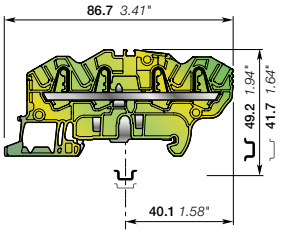

5.2 mm 0.205 in spacing

	2.5 mm²
	12 AWG

Description

Improve the safety of your installation in the event of a short-circuit thanks to our screwless rail contact:

- Rail contact non operator dependent,
- Performances above the requirements of the IEC 60947-7-2 terminal block standard,
- Secured snap on or off the rail,
- Profile aligned with ZK2.5-4P.

Ordering details

Description		Color	Type	Part Number		Pkg qty	Weight (1 pce) g
Ground	4 connections	Green-yellow	ZK2.5-PE-4P	1SNK705152R0000		20	13.60

Main technical data

Connecting capacity		IEC	UL - CSA
1 conductor per clamp	Rigid: Solid/Stranded	0.2 ... 4 mm²	26 ... 12 AWG
	Flexible without ferrule	0.22 ... 2.5 mm²	
	Flexible with non insulated ferrule	0.22 ... 2.5 mm²	26 ... 14 AWG
	Flexible with insulated ferrule	0.22 ... 2.5 mm²	26 ... 14 AWG
Rated cross section		2.5 mm²	12 AWG
Rated short-time withstand current (1s)		300 A	396 A
Protection		IP20	NEMA 1
Explosive atmosphere classification		IM2 II 2 GD Ex eb I/IIC/IIIC – Class I, Zone 1, AEx e II, Ex e II U	

The connecting capacity data for one Rigid: Solid/Stranded, or one Flexible conductor (when applicable) is a mandatory information required by IEC, UL and CSA standards (Copper conductors). All other data are provided as supplementary information only. For more details, please consult our CB, UL or CSA certificates and technical datasheet available on http://www.TE.com

CE, CB, RoHS, USR CNR, CSA, EAC Ex, ATEX, IECEx, Haz Loc, BV, DNV

Mounting instructions

Rail		TH 35-7.5, TH 35-15
Wire stripping length		11 mm 0.433 in
Tool (for flexible conductor without ferrule)		Flat screwdriver Ø 3.5 mm Ø 0.138 in

2

Accessories

	Description			Color	Type	Part Number		Pkg qty	Weight (1 pce) g
1	**End stops**	5.2 mm	0.205 in	Dark grey	BAZ1	1SNK900002R0000		50	5.30
2	**End sections**	2 mm	0.079 in	Dark grey	EK2.5-4P	1SNK705912R0000		20	2.70
3	**Circuit separators**	3 mm	0.118 in	Dark grey	CS-R3	1SNK900107R0000		20	6.40
4	**Terminal block markers**	Blank marker		White	MG-CPM 13 41790	1SNB041790R0512		1960	0.23
		Blank card			MC512	1SNK140000R0000		22	9.00
					MC512PA	1SNK149999R0000		20	10.00
		Universal wire markers holder		Grey	UMH	1SNK900611R0000		10	0.20

Complete list of accessories is indicated in the terminal block datasheet including end stops.
Some accessories such as jumper bars may modify the terminal block's ratings: Complete information available in the accessories section of the catalog.

1SNK162041S0201

Technical data valid for copper conductors only.

ZK4-PE PI-Spring terminal blocks
Ground - 6 mm 0.236 in spacing

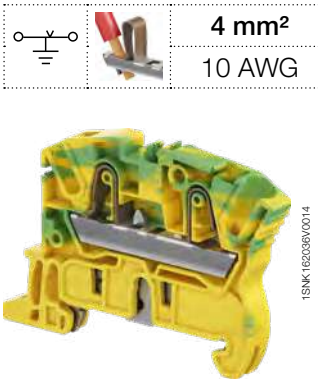

ZK4-PE

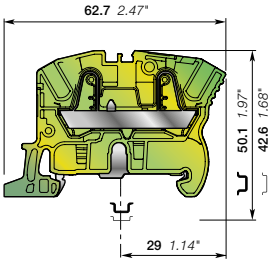

6 mm 0.236 in spacing

	4 mm²
	10 AWG

Description

Improve the safety of your installation in the event of a short-circuit thanks to our screwless rail contact:
- Rail contact non operator dependent,
- Performances above the requirements of the IEC 60947-7-2 terminal block standard,
- Secured snap on or off the rail,
- Profile aligned with ZK4.

Ordering details

Description		Color	Type	Part Number		Pkg qty	Weight (1 pce) g
Ground	2 connections	Green-yellow	ZK4-PE	1SNK706150R0000		20	12.60

Main technical data

Connecting capacity		IEC	UL - CSA
1 conductor per clamp	Rigid: Solid/Stranded	0.5 ... 6 mm²	26 ... 10 AWG
	Flexible without ferrule	0.5 ... 4 mm²	
	Flexible with non insulated ferrule	0.5 ... 4 mm²	26 ... 12 AWG
	Flexible with insulated ferrule	0.5 ... 4 mm²	26 ... 12 AWG
Rated cross section		4 mm²	10 AWG
Rated short-time withstand current (1s)		480 A	636 A
Protection		IP20	NEMA 1
Explosive atmosphere classification		IM2 II 2 GD Ex eb I/IIC/IIIC – Class I, Zone 1, AEx e II, Ex e II U	

Mounting instructions

Rail	TH 35-7.5, TH 35-15
Wire stripping length	12.5 mm 0.492 in
Tool (for flexible conductor without ferrule)	Flat screwdriver Ø 3.5 mm Ø 0.138 in

The connecting capacity data for one Rigid: Solid/Stranded, or one Flexible conductor (when applicable) is a mandatory information required by IEC, UL and CSA standards (Copper conductors). All other data are provided as supplementary information only. For more details, please consult our CB, UL or CSA certificates and technical datasheet available on http://www.TE.com

CE, CB, RoHS, USR CNR, CSA, EAC Ex, ATEX, IECEx, Haz Loc, BV, DNV

Accessories

	Description			Color	Type	Part Number		Pkg qty	Weight (1 pce) g
1	**End stops**	5.2 mm	0.205 in	Dark grey	BAZ1	1SNK900002R0000		50	5.30
2	**End sections**	2 mm	0.079 in	Dark grey	EK2.5	1SNK705910R0000		20	1.80
3	**Circuit separators**	3 mm	0.118 in	Dark grey	CS-R2	1SNK900106R0000		20	3.80
4	**Terminal block markers**	Blank marker		White	MG-CPM 13 41791	1SNB041791R0612		1680	0.27
		Blank card			MC612	1SNK150000R0000		22	10.00
					MC612PA	1SNK159999R0000		20	11.00
		Universal wire markers holder		Grey	UMH	1SNK900611R0000		10	0.20

Complete list of accessories is indicated in the terminal block datasheet including end stops.
Some accessories such as jumper bars may modify the terminal block's ratings: Complete information available in the accessories section of the catalog.

1SNK162042S0201

Technical data valid for copper conductors only.

ZK4-PE-3P PI-Spring terminal blocks

Ground with 3 connections - 6 mm 0.236 in spacing

4 mm²
10 AWG

1SNK162040V0014

ZK4-PE-3P

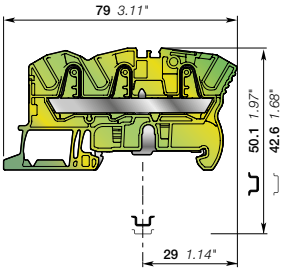

6 mm 0.236 in spacing

Description

Improve the safety of your installation in the event of a short-circuit thanks to our screwless rail contact:

- Rail contact non operator dependent,
- Performances above the requirements of the IEC 60947-7-2 terminal block standard,
- Secured snap on or off the rail,
- Profile aligned with ZK4-3P.

Ordering details

Description		Color	Type	Part Number		Pkg qty	Weight (1 pce) g
Ground	3 connections	Green-yellow	ZK4-PE-3P	1SNK706151R0000		20	15.70

Main technical data

Connecting capacity		IEC	UL - CSA
1 conductor per clamp	Rigid: Solid/Stranded	0.5 ... 6 mm²	26 ... 10 AWG
	Flexible without ferrule	0.5 ... 4 mm²	
	Flexible with non insulated ferrule	0.5 ... 4 mm²	26 ... 12 AWG
	Flexible with insulated ferrule	0.5 ... 4 mm²	26 ... 12 AWG
Rated cross section		4 mm²	10 AWG
Rated short-time withstand current (1s)		480 A	636 A
Protection		IP20	NEMA 1
Explosive atmosphere classification		IM2 II 2 GD Ex eb I/IIC/IIIC – Class I, Zone 1, AEx e II, Ex e II U	

Mounting instructions

Rail		TH 35-7.5, TH 35-15
Wire stripping length		12.5 mm 0.492 in
Tool (for flexible conductor without ferrule)		Flat screwdriver Ø 3.5 mm Ø 0.138 in

The connecting capacity data for one Rigid: Solid/Stranded, or one Flexible conductor (when applicable) is a mandatory information required by IEC, UL and CSA standards (Copper conductors). All other data are provided as supplementary information only. For more details, please consult our CB, UL or CSA certificates and technical datasheet available on http://www.TE.com

CE, CB, RoHS, USR CNR, CSA, EAC Ex, ATEX, IECEx, Haz Loc, BV, DNV

Accessories

	Description			Color	Type	Part Number		Pkg qty	Weight (1 pce) g
1	**End stops**	5.2 mm	0.205 in	Dark grey	BAZ1	1SNK900002R0000		50	5.30
2	**End sections**	2 mm	0.079 in	Dark grey	EK2.5-3P	1SNK705911R0000		20	2.40
3	**Circuit separators**	3 mm	0.118 in	Dark grey	CS-R3	1SNK900107R0000		20	6.40
4	**Terminal block markers**	Blank marker		White	MG-CPM 13 41791	1SNB041791R0612		1680	0.27
		Blank card			MC612	1SNK150000R0000		22	10.00
					MC612PA	1SNK159999R0000		20	11.00
		Universal wire markers holder		Grey	UMH	1SNK900611R0000		10	0.20

Complete list of accessories is indicated in the terminal block datasheet including end stops.
Some accessories such as jumper bars may modify the terminal block's ratings: Complete information available in the accessories section of the catalog.

1SNK162043S0201

Technical data valid for copper conductors only.

ZK4-PE-4P PI-Spring terminal blocks

Ground with 4 connections - 6 mm 0.236 in spacing

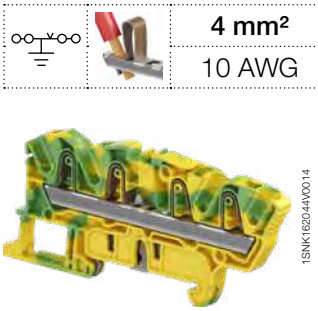

ZK4-PE-4P

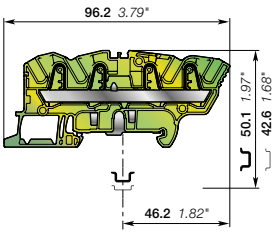

6 mm 0.236 in spacing

4 mm²
10 AWG

Description

Improve the safety of your installation in the event of a short-circuit thanks to our screwless rail contact:

- Rail contact non operator dependent,
- Performances above the requirements of the IEC 60947-7-2 terminal block standard,
- Secured snap on or off the rail,
- Profile aligned with ZK4-4P.

Ordering details

Description		Color	Type	Part Number		Pkg qty	Weight (1 pce) g
Ground	4 connections	Green-yellow	ZK4-PE-4P	1SNK706152R0000		20	18.40

Main technical data

Connecting capacity		IEC	UL - CSA
1 conductor per clamp	Rigid: Solid/Stranded	0.5 ... 6 mm²	26 ... 10 AWG
	Flexible without ferrule	0.5 ... 4 mm²	
	Flexible with non insulated ferrule	0.5 ... 4 mm²	26 ... 12 AWG
	Flexible with insulated ferrule	0.5 ... 4 mm²	26 ... 12 AWG
Rated cross section		4 mm²	10 AWG
Rated short-time withstand current (1s)		480 A	636 A
Protection		IP20	NEMA 1
Explosive atmosphere classification		IM2 II 2 GD Ex eb I/IIC/IIIC – Class I, Zone 1, AEx e II, Ex e II U	

Mounting instructions

Rail	TH 35-7.5, TH 35-15
Wire stripping length	12.5 mm 0.492 in
Tool (for flexible conductor without ferrule)	Flat screwdriver Ø 3.5 mm Ø 0.138 in

The connecting capacity data for one Rigid: Solid/Stranded, or one Flexible conductor (when applicable) is a mandatory information required by IEC, UL and CSA standards (Copper conductors). All other data are provided as supplementary information only. For more details, please consult our CB, UL or CSA certificates and technical datasheet available on http://www.TE.com

CE, CB, RoHS, USR CNR, CSA, EAC Ex, ATEX, IECEx, Haz Loc, BV, DNV

Accessories

	Description			Color	Type	Part Number		Pkg qty	Weight (1 pce) g
1	End stops	5.2 mm	0.205 in	Dark grey	BAZ1	1SNK900002R0000		50	5.30
2	End sections	2 mm	0.079 in	Dark grey	EK2.5-4P	1SNK705912R0000		20	2.70
3	Circuit separators	3 mm	0.118 in	Dark grey	CS-R3	1SNK900107R0000		20	6.40
4	Terminal block markers	Blank marker		White	MG-CPM 13 41791	1SNB041791R0612		1680	0.27
		Blank card			MC612	1SNK150000R0000		22	10.00
					MC612PA	1SNK159999R0000		20	11.00
		Universal wire markers holder		Grey	UMH	1SNK900611R0000		10	0.20

Complete list of accessories is indicated in the terminal block datasheet including end stops.
Some accessories such as jumper bars may modify the terminal block's ratings: Complete information available in the accessories section of the catalog.

1SNK162044S0201

Technical data valid for copper conductors only.

ZK6-PE PI-Spring terminal blocks
Ground - 8 mm 0.315 in spacing

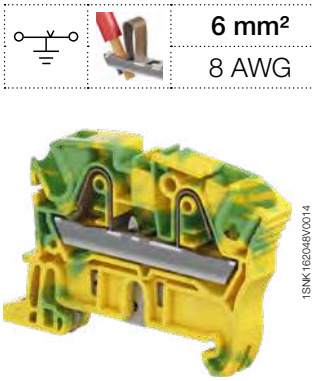

ZK6-PE

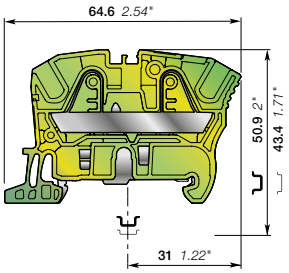

8 mm 0.315 in spacing

	6 mm²
	8 AWG

Description

Improve the safety of your installation in the event of a short-circuit thanks to our screwless rail contact:
- Rail contact non operator dependent,
- Performances above the requirements of the IEC 60947-7-2 terminal block standard,
- Secured snap on or off the rail,
- Profile aligned with ZK6.

Ordering details

Description		Color	Type	Part Number		Pkg qty	Weight (1 pce) g
Ground	2 connections	Green-yellow	ZK6-PE	1SNK708150R0000		20	20.30

Main technical data

Connecting capacity		IEC	UL - CSA
1 conductor per clamp	Rigid: Solid/Stranded	0.5 ... 10 mm²	24 ... 8 AWG
	Flexible without ferrule	0.5 ... 6 mm²	
	Flexible with non insulated ferrule	0.5 ... 6 mm²	24 ... 10 AWG
	Flexible with insulated ferrule	0.5 ... 6 mm²	24 ... 10 AWG
Rated cross section		6 mm²	8 AWG
Rated short-time withstand current (1s)		720 A	1008 A
Protection		IP20	NEMA 1
Explosive atmosphere classification		IM2 II 2 GD Ex eb I/IIC/IIIC – Class I, Zone 1, AEx e II, Ex e II U	

Mounting instructions

Rail	TH 35-7.5, TH 35-15
Wire stripping length	12.5 mm 0.492 in
Tool (for flexible conductor without ferrule)	Flat screwdriver Ø 3.5 mm Ø 0.138 in

The connecting capacity data for one Rigid: Solid/Stranded, or one Flexible conductor (when applicable) is a mandatory information required by IEC, UL and CSA standards (Copper conductors). All other data are provided as supplementary information only. For more details, please consult our CB, UL or CSA certificates and technical datasheet available on http://www.TE.com

CE, CB, RoHS, USR CNR, CSA, EAC Ex, ATEX, IECEx, Haz Loc, BV, DNV

Accessories

	Description			Color	Type	Part Number		Pkg qty	Weight (1 pce) g
1	**End stops**	5.2 mm	0.205 in	Dark grey	BAZ1	1SNK900002R0000		50	5.30
2	**End sections**	2 mm	0.079 in	Dark grey	EK2.5	1SNK705910R0000		20	1.80
3	**Circuit separators**	3 mm	0.118 in	Dark grey	CS-R2	1SNK900106R0000		20	3.80
4	**Terminal block markers**	Blank marker		White	MG-CPM 13 41791	1SNB041791R0612		1680	0.27
		Blank card			MC812	1SNK160000R0000		22	10.00
					MC812PA	1SNK169999R0000		20	14.00
		Universal wire markers holder		Grey	UMH	1SNK900611R0000		10	0.20

Complete list of accessories is indicated in the terminal block datasheet including end stops.
Some accessories such as jumper bars may modify the terminal block's ratings: Complete information available in the accessories section of the catalog.

1SNK162045S0201

Technical data valid for copper conductors only.

ZK6-PE-3P PI-Spring terminal blocks

Ground with 3 connections - 8 mm 0.315 in spacing

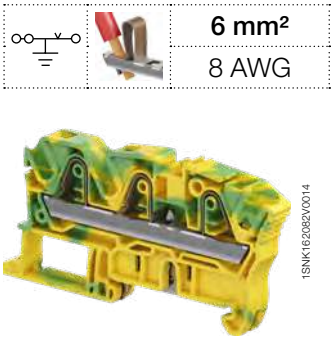

6 mm²
8 AWG

1SNK162082V0014

ZK6-PE-3P

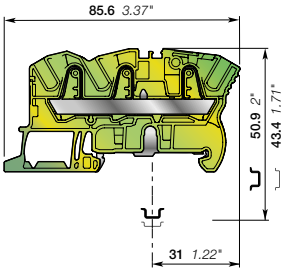

8 mm 0.315 in spacing

Description

Improve the safety of your installation in the event of a short-circuit thanks to our screwless rail contact:

- Rail contact non operator dependent,
- Performances above the requirements of the IEC 60947-7-2 terminal block standard,
- Secured snap on or off the rail,
- Profile aligned with ZK6-3P.

Ordering details

Description		Color	Type	Part Number		Pkg qty	Weight (1 pce) g
Ground	3 connections	Green-yellow	ZK6-PE-3P	1SNK708151R0000		20	21.50

Main technical data

Connecting capacity		IEC	UL - CSA
1 conductor per clamp	Rigid: Solid/Stranded	0.5 ... 10 mm²	24 ... 8 AWG
	Flexible without ferrule	0.5 ... 6 mm²	
	Flexible with non insulated ferrule	0.5 ... 6 mm²	24 ... 10 AWG
	Flexible with insulated ferrule	0.5 ... 6 mm²	24 ... 10 AWG
Rated cross section		6 mm²	8 AWG
Rated short-time withstand current (1s)		720 A	1008 A
Protection		IP20	NEMA 1
Explosive atmosphere classification		IM2 II 2 GD Ex eb I/IIC/IIIC – Class I, Zone 1, AEx e II, Ex e II U	

The connecting capacity data for one Rigid: Solid/Stranded, or one Flexible conductor (when applicable) is a mandatory information required by IEC, UL and CSA standards (Copper conductors). All other data are provided as supplementary information only. For more details, please consult our CB, UL or CSA certificates and technical datasheet available on http://www.TE.com

Mounting instructions

Rail	TH 35-7.5, TH 35-15
Wire stripping length	12.5 mm 0.492 in
Tool (for flexible conductor without ferrule)	Flat screwdriver Ø 3.5 mm Ø 0.138 in

CE, CB, RoHS, USR CNR, CSA, EAC Ex, ATEX, IECEx, Haz Loc, BV, DNV

Accessories

	Description			Color	Type	Part Number		Pkg qty	Weight (1 pce) g
1	End stops	5.2 mm	0.205 in	Dark grey	BAZ1	1SNK900002R0000		50	5.30
2	End sections	2 mm	0.079 in	Dark grey	EK6-3P	1SNK708911R0000		20	2.80
3	Circuit separators	3 mm	0.118 in	Dark grey	CS-R3	1SNK900107R0000		20	6.40
4	Terminal block markers	Blank marker		White	MG-CPM 13 41791	1SNB041791R0612		1680	0.27
		Blank card			MC812	1SNK160000R0000		22	10.00
					MC812PA	1SNK169999R0000		20	14.00
		Universal wire markers holder		Grey	UMH	1SNK900611R0000		10	0.20

Complete list of accessories is indicated in the terminal block datasheet including end stops.
Some accessories such as jumper bars may modify the terminal block's ratings: Complete information available in the accessories section of the catalog.

1SNK162046S0201

Technical data valid for copper conductors only.

ZK10-PE PI-Spring terminal blocks
Ground - 10 mm 0.394 in spacing

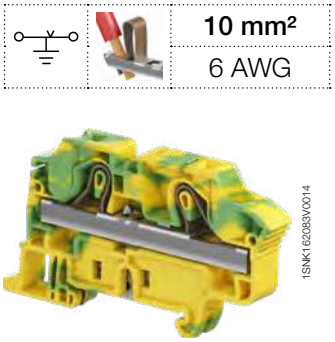

10 mm²	
6 AWG	

ZK10-PE

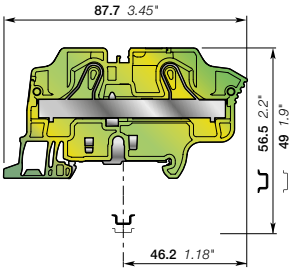

10 mm 0.394 in spacing

Description

Improve the safety of your installation in the event of a short-circuit thanks to our screwless rail contact:
- Rail contact non operator dependent,
- Performances above the requirements of the IEC 60947-7-2 terminal block standard,
- Secured snap on or off the rail,
- Profile aligned with ZK10.

Ordering details

Description		Color	Type	Part Number		Pkg qty	Weight (1 pce) g
Ground	2 connections	Green-yellow	ZK10-PE	1SNK710150R0000		20	36.20

Main technical data

Connecting capacity		IEC	UL - CSA
1 conductor per clamp	Rigid: Solid/Stranded	0.5 ... 16 mm²	20 ... 6 AWG
	Flexible without ferrule	0.5 ... 10 mm²	
	Flexible with non insulated ferrule	0.5 ... 10 mm²	20 ... 8 AWG
	Flexible with insulated ferrule	0.5 ... 10 mm²	20 ... 8 AWG
Rated cross section		10 mm²	6 AWG
Rated short-time withstand current (1s)		1200 A	1596 A
Protection		IP20	NEMA 1
Explosive atmosphere classification		IM2 II 2 GD Ex eb I/IIC/IIIC – Class I, Zone 1, AEx e II, Ex e II U	

The connecting capacity data for one Rigid: Solid/Stranded, or one Flexible conductor (when applicable) is a mandatory information required by IEC, UL and CSA standards (Copper conductors). All other data are provided as supplementary information only. For more details, please consult our CB, UL or CSA certificates and technical datasheet available on http://www.TE.com

CE, CB, RoHS, USR CNR, CSA, EAC Ex, ATEX, IECEx, Haz Loc, BV, DNV

Mounting instructions

Rail		TH 35-7.5, TH 35-15
Wire stripping length		15 mm 0.591 in
Tool (for flexible conductor without ferrule)		Flat screwdriver Ø 4 mm Ø 0.157 in

Accessories

	Description			Color	Type	Part Number		Pkg qty	Weight (1 pce) g
1	End stops	5.2 mm	0.205 in	Dark grey	BAZ1	1SNK900002R0000		50	5.30
2	End sections	2 mm	0.079 in	Dark grey	EK10	1SNK710910R0000		20	3.30
3	Circuit separators	3 mm	0.118 in	Dark grey	CS-R3	1SNK900107R0000		20	6.40
4	Test adapters	For test plugs DIA 2 mm 0.079 in		Dark grey	TP2	1SNK900203R0000		20	1.70
		For test plugs DIA 4 mm 0.157 in			TP4	1SNK900205R0000		20	2.40
5	Terminal block markers	Blank marker		White	MG-CPM 13 41791	1SNB041791R0612		1680	0.27
		Blank card			MC812	1SNK160000R0000		22	10.00
					MC812PA	1SNK169999R0000		20	14.00
		Universal wire markers holder		Grey	UMH	1SNK900611R0000		10	0.20

Complete list of accessories is indicated in the terminal block datasheet including end stops.
Some accessories such as jumper bars may modify the terminal block's ratings: Complete information available in the accessories section of the catalog.

1SNK162047S0201

Technical data valid for copper conductors only.

ZK10-PE-3P PI-Spring terminal blocks

Ground with 3 connections - 10 mm 0.394 in spacing

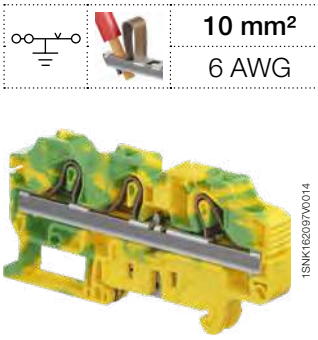

ZK10-PE-3P

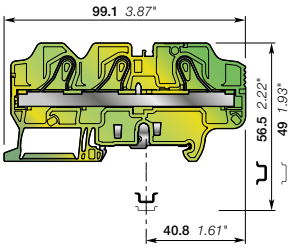

10 mm 0.394 in spacing

	10 mm²
	6 AWG

Description

Improve the safety of your installation in the event of a short-circuit thanks to our screwless rail contact:

- Rail contact non operator dependent,
- Performances above the requirements of the IEC 60947-7-2 standard,
- Secured snap on or off the rail,
- Profile aligned with ZK10-3P.

Ordering details

Description		Color	Type	Part Number		Pkg qty	Weight (1 pce) g
Ground	3 connections	Green-yellow	ZK10-PE-3P	1SNK710151R0000		20	43.3

Main technical data

Connecting capacity		IEC	UL - CSA
1 conductor per clamp	Rigid: Solid/Stranded	0.5 ... 16 mm²	20 ... 6 AWG
	Flexible without ferrule	0.5 ... 10 mm²	
	Flexible with non insulated ferrule	0.5 ... 10 mm²	20 ... 8 AWG
	Flexible with insulated ferrule	0.5 ... 10 mm²	20 ... 8 AWG
Rated cross section		10 mm²	6 AWG
Rated short-time withstand current (1s)		1200 A	1596 A
Protection		IP20	NEMA 1
Explosive atmosphere classification		IM2 II 2 GD Ex eb I/II/IIIC	

The connecting capacity data for one Rigid: Solid/Stranded, or one Flexible conductor (when applicable) is a mandatory information required by IEC, UL and CSA standards (Copper conductors). All other data are provided as supplementary information only. For more details, please consult our CB, UL or CSA certificates and technical datasheet available on http://www.TE.com

CE, CB, RoHS, USR CNR, CSA, EAC Ex, ATEX, IECEx, BV

Mounting instructions

Rail		TH 35-7.5, TH 35-15
Wire stripping length		15 mm 0.591 in
Tool (for flexible conductor without ferrule)		Flat screwdriver Ø 4 mm Ø 0.157 in

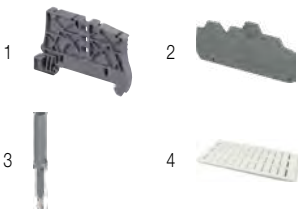

Accessories

	Description			Color	Type	Part Number		Pkg qty	Weight (1 pce) g
1	**End stops**	5.2 mm	0.205 in	Dark grey	BAZ1	1SNK900002R0000		50	5.30
2	**End sections**	2 mm	0.079 in	Dark grey	EK10-3P	1SNK710911R0000		20	4.5
3	**Test adapters**	For test plugs DIA 2 mm 0.079 in		Dark grey	TP2	1SNK900203R0000		20	1.70
		For test plugs DIA 4 mm 0.157 in			TP4	1SNK900205R0000		20	2.40
4	**Terminal block markers**	Blank marker		White	MG-CPM 13 41791	1SNB041791R0612		1680	0.27
		Blank card			MC812	1SNK160000R0000		22	10.00
					MC812PA	1SNK169999R0000		20	14.00
		Universal wire markers holder		Grey	UMH	1SNK900611R0000		10	0.20

Complete list of accessories is indicated in the terminal block datasheet including end stops.
Some accessories such as jumper bars may modify the terminal block's ratings: Complete information available in the accessories section of the catalog.

1SNK162062S0201

Technical data valid for copper conductors only.

ZK16-PE PI-Spring terminal blocks
Ground - 12 mm 0.472 in spacing

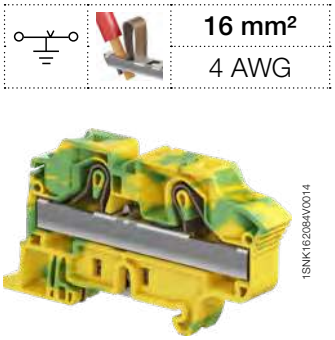

ZK16-PE

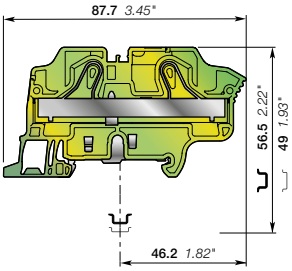

12 mm 0.472 in spacing

	16 mm²
	4 AWG

Description

Improve the safety of your installation in the event of a short-circuit thanks to our screwless rail contact:
- Rail contact non operator dependent,
- Performances above the requirements of the IEC 60947-7-2 terminal block standard,
- Secured snap on or off the rail,
- Profile aligned with ZK16.

Ordering details

Description		Color	Type	Part Number		Pkg qty	Weight (1 pce) g
Ground	2 connections	Green-yellow	ZK16-PE	1SNK712150R0000		20	47.00

Main technical data

Connecting capacity		IEC	UL - CSA
1 conductor per clamp	Rigid: Solid/Stranded	0.5 ... 25 mm²	20 ... 4 AWG
	Flexible without ferrule	0.5 ... 16 mm²	
	Flexible with non insulated ferrule	0.5 ... 16 mm²	20 ... 6 AWG
	Flexible with insulated ferrule	0.5 ... 16 mm²	20 ... 6 AWG
Rated cross section		16 mm²	4 AWG
Rated short-time withstand current (1s)		1920 A	2544 A
Protection		IP20	NEMA 1
Explosive atmosphere classification		IM2 II 2 GD Ex eb I/IIC/IIIC – Class I, Zone 1, AEx e II, Ex e II U	

Mounting instructions

Rail	TH 35-7.5, TH 35-15
Wire stripping length	15 mm 0.591 in
Tool (for flexible conductor without ferrule)	Flat screwdriver Ø 4 mm Ø 0.157 in

The connecting capacity data for one Rigid: Solid/Stranded, or one Flexible conductor (when applicable) is a mandatory information required by IEC, UL and CSA standards (Copper conductors). All other data are provided as supplementary information only. For more details, please consult our CB, UL or CSA certificates and technical datasheet available on http://www.TE.com

CE, CB, RoHS, USR CNR, CSA, EAC Ex, ATEX, IECEx, Haz Loc, BV, DNV

Accessories

	Description			Color	Type	Part Number		Pkg qty	Weight (1 pce) g
1	**End stops**	5.2 mm	0.205 in	Dark grey	BAZ1	1SNK900002R0000		50	5.30
2	**End sections**	2 mm	0.079 in	Dark grey	EK10	1SNK710910R0000		20	3.30
3	**Circuit separators**	3 mm	0.118 in	Dark grey	CS-R3	1SNK900107R0000		20	6.40
4	**Test adapters**	For test plugs DIA 2 mm 0.079 in		Dark grey	TP2	1SNK900203R0000		20	1.70
		For test plugs DIA 4 mm 0.157 in			TP4	1SNK900205R0000		20	2.40
5	**Terminal block markers**	Blank marker		White	MG-CPM 13 41791	1SNB041791R0612		1680	0.27
		Blank card			MC812	1SNK160000R0000		22	10.00
					MC812PA	1SNK169999R0000		20	14.00
		Universal wire markers holder		Grey	UMH	1SNK900611R0000		10	0.20

Complete list of accessories is indicated in the terminal block datasheet including end stops.
Some accessories such as jumper bars may modify the terminal block's ratings: Complete information available in the accessories section of the catalog.

1SNK162048S0201

Technical data valid for copper conductors only.

ZK16-PE-3P PI-Spring terminal blocks

Ground with 3 connections - 12 mm 0.472 in spacing

16 mm²
4 AWG

ZK16-PE-3P

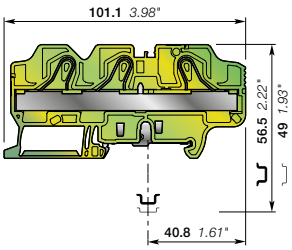

12 mm 0.472 in spacing

Description

Improve the safety of your installation in the event of a short-circuit thanks to our screwless rail contact:

- Rail contact non operator dependent,
- Performances above the requirements of the IEC 60947-7-2 standard,
- Secured snap on or off the rail,
- Profile aligned with ZK16-3P.

Ordering details

Description		Color	Type	Part Number		Pkg qty	Weight (1 pce) g
Ground	3 connections	Green-yellow	ZK16-PE-3P	1SNK712151R0000		20	56.65

Main technical data

Connecting capacity		IEC	UL - CSA
1 conductor per clamp	Rigid: Solid/Stranded	0.5 ... 25 mm²	20 ... 4 AWG
	Flexible without ferrule	0.5 ... 16 mm²	
	Flexible with non insulated ferrule	0.5 ... 16 mm²	20 ... 6 AWG
	Flexible with insulated ferrule	0.5 ... 16 mm²	20 ... 6 AWG
Rated cross section		16 mm²	4 AWG
Rated short-time withstand current (1s)		1920 A	2544 A
Protection		IP20	NEMA 1
Explosive atmosphere classification		IM2 II 2 GD Ex eb I/II/IIIC	

Mounting instructions

Rail	TH 35-7.5, TH 35-15
Wire stripping length	15 mm 0.591 in
Tool (for flexible conductor without ferrule)	Flat screwdriver Ø 4 mm Ø 0.157 in

The connecting capacity data for one Rigid: Solid/Stranded, or one Flexible conductor (when applicable) is a mandatory information required by IEC, UL and CSA standards (Copper conductors). All other data are provided as supplementary information only. For more details, please consult our CB, UL or CSA certificates and technical datasheet available on http://www.TE.com

CE, CB, RoHS, USR CNR, CSA, EAC Ex, ATEX, IECEx, BV

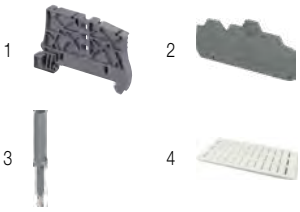

Accessories

	Description			Color	Type	Part Number		Pkg qty	Weight (1 pce) g
1	**End stops**	5.2 mm	0.205 in	Dark grey	BAZ1	1SNK900002R0000		50	5.30
2	**End sections**	2 mm	0.079 in	Dark grey	EK10-3P	1SNK710911R0000		20	4.5
3	**Test adapters**	For test plugs DIA 2 mm 0.079 in		Dark grey	TP2	1SNK900203R0000		20	1.70
		For test plugs DIA 4 mm 0.157 in			TP4	1SNK900205R0000		20	2.40
4	**Terminal block markers**	Blank marker		White	MG-CPM 13 41791	1SNB041791R0612		1680	0.27
		Blank card			MC812	1SNK160000R0000		22	10.00
					MC812PA	1SNK169999R0000		20	14.00
		Universal wire markers holder		Grey	UMH	1SNK900611R0000		10	0.20

Complete list of accessories is indicated in the terminal block datasheet including end stops.
Some accessories such as jumper bars may modify the terminal block's ratings: Complete information available in the accessories section of the catalog.

1SNK162064S0201

Technical data valid for copper conductors only.

ZK2.5-S PI-Spring terminal blocks

Disconnect with blade - with test sockets - 5.2 mm 0.205 in spacing

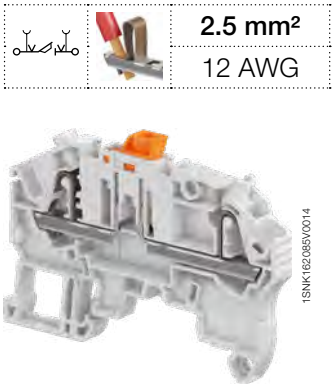

2.5 mm²
12 AWG

ZK2.5-S

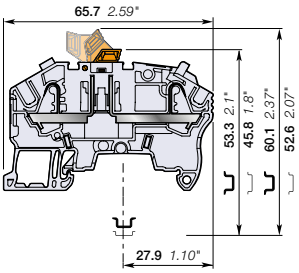

5.2 mm 0.205 in spacing

Description

Combine high performance with compact dimensions: 630 V IEC 300 V UL.
Secure the current measurement:
- for currents below 50 mA, thanks to 2 built in test points DIA 2 mm 0.079 in,
- for currents up to 16 A, by using the TP4 test adapter inserted into the jumper channels.

Ordering details

Description		Color	Type	Part Number		Pkg qty	Weight (1 pce) g
Disconnect	with 2 test sockets DIA 2 mm 0.079 in	Grey	ZK2.5-S	1SNK705310R0000		50	8.10
		Blue	ZK2.5-S-BL	1SNK705320R0000		50	8.10
		Orange	ZK2.5-S-OR	1SNK705330R0000		50	8.10

Main technical data

Connecting capacity		IEC	UL - CSA
1 conductor per clamp	Rigid: Solid/Stranded	0.2 ... 4 mm²	26 ... 12 AWG
	Flexible without ferrule	0.22 ... 2.5 mm²	
	Flexible with non insulated ferrule	0.22 ... 2.5 mm²	26 ... 14 AWG
	Flexible with insulated ferrule	0.22 ... 2.5 mm²	26 ... 14 AWG
2 conductors per clamp	Flexible with twin ferrule	0.22 ... 0.5 mm²	26 ... 20 AWG
Rated current / Rated cross section		20 A / 2.5 mm²	20 A / 12 AWG
Rated short-time withstand current (1s)		300 A	396 A
Rated voltage		630 V	300 V
Impulse withstand voltage		6000 V	
Protection		IP20	NEMA 1

Mounting instructions

Rail		TH 35-7.5, TH 35-15
Wire stripping length		11 mm 0.433 in
Tool (for flexible conductor without ferrule)		Flat screwdriver Ø 3.5 mm Ø 0.138 in

Recommendation for best usage: in horizontal assemblies, disconnect terminal blocks should be mounted with fixed foot on top (power side) so that the disconnect knife does not partially close through gravity. Furthermore, as specified per IEC 60947-7-1, disconnect terminal blocks are intended to be used for temporary disconnection at zero potential and at no load.

The connecting capacity data for one Rigid: Solid/Stranded, or one Flexible conductor (when applicable) is a mandatory information required by IEC, UL and CSA standards (Copper conductors). All other data are provided as supplementary information only. For more details, please consult our CB, UL or CSA certificates and technical datasheet available on http://www.TE.com

CE, CB, RoHS, USR CNR, CSA, EAC, BV, DNV

Accessories

	Description			Color	Type	Part Number		Pkg qty	Weight (1 pce) g
1	**End stops**	5.2 mm	0.205 in	Dark grey	BAZ1	1SNK900002R0000		50	5.30
2	**End sections**	2 mm	0.079 in	Dark grey	EK2.5-3P	1SNK705911R0000		20	2.40
3	**Jumper bars**	2 poles	32 A (IEC)	Orange	JB5-2	1SNK905302R0000		50	1.30
		3 poles	32 A (IEC)		JB5-3	1SNK905303R0000		50	2.00
		4 poles	32 A (IEC)		JB5-4	1SNK905304R0000		50	2.70
		5 poles	32 A (IEC)		JB5-5	1SNK905305R0000		50	3.50
		10 poles	32 A (IEC)		JB5-10	1SNK905310R0000		30	7.10
		50 poles	32 A (IEC)		JB5-50	1SNK905350R0000		10	36.00
4	**Circuit separators**	3 mm	0.118 in	Dark grey	CS-R3	1SNK900107R0000		20	6.40
5	**Test adapters**	For test plugs DIA 2 mm 0.079 in		Dark grey	TP2	1SNK900203R0000		20	1.70
		For test plugs DIA 4 mm 0.157 in			TP4	1SNK900205R0000		20	2.40
6	**Test connectors**	5.2 mm 0.205 in spacing		Dark grey	TC5	1SNK900200R0000		10	5.20
		End module, 5.2 mm 0.205 in			TC5-R1	1SNK900201R0000		10	5.20
7	**Shield connectors**				SHBP	1SNK900601R0000		20	4.10
8	**Terminal block markers**	Blank marker		White	MG-CPM 13 41790	1SNB041790R0512		1960	0.23
		Blank card			MC512	1SNK140000R0000		22	9.00
					MC512PA	1SNK149999R0000		20	10.00
		Universal wire markers holder		Grey	UMH	1SNK900611R0000		10	0.20

Complete list of accessories is indicated in the terminal block datasheet including end stops.
Some accessories such as jumper bars may modify the terminal block's ratings: Complete information available in the accessories section of the catalog.

1SNK162036S0201

Technical data valid for copper conductors only.

ZK2.5-S-4P PI-Spring terminal blocks

Disconnect with blade - with test socket - 5.2 mm 0.205 in spacing

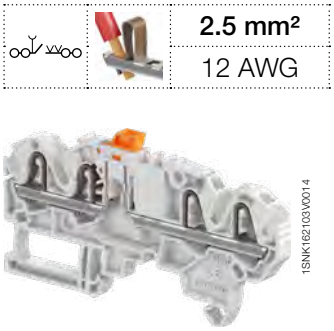

2.5 mm²
12 AWG

ZK2.5-S-4P

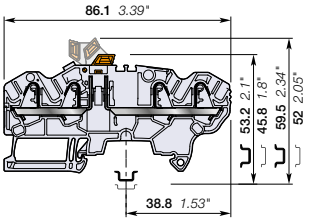

5.2 mm 0.205 in spacing

Description

- Combine high performances with compact dimensions: 630 V IEC 300 V UL,
- Simplify the measurement with 1 built in test point DIA 2 mm 0.079 in (for current below 50mA) and TP... test adapter inserted into one jumper channel,
- Clear marking visibility with SNK top marking location 20% enlarged.

Ordering details

Description		Color	Type	Part Number		Pkg qty	Weight (1 pce) g
Disconnect	with 1 test socket DIA 2 mm 0.079 in	Grey	ZK2.5-S-4P	1SNK705312R0000		50	11.14
		Blue	ZK2.5-S-4P-BL	1SNK705321R0000		50	11.14
		Orange	ZK2.5-S-4P-OR	1SNK705331R0000		50	11.14

Main technical data

Connecting capacity		IEC	UL - CSA
1 conductor per clamp	Rigid: Solid/Stranded	0.2 ... 4 mm²	26 ... 12 AWG
	Flexible without ferrule	0.22 ... 2.5 mm²	
	Flexible with non insulated ferrule	0.22 ... 2.5 mm²	26 ... 14 AWG
	Flexible with insulated ferrule	0.22 ... 2.5 mm²	26 ... 14 AWG
2 conductors per clamp	Flexible with twin ferrule	0.22 ... 0.5 mm²	26 ... 20 AWG
Rated current / Rated cross section		20 A / 2.5 mm²	20 A / 12 AWG
Rated short-time withstand current (1s)		300 A	
Short Circuit Current Rating (with specific conditions)			
Rated voltage		630 V	300 V
Impulse withstand voltage		6000 V	
Protection		IP20	NEMA 1

Mounting instructions

Rail		TH 35-7.5, TH 35-15
Wire stripping length		11 mm 0.433 in
Tool (for flexible conductor without ferrule)		Flat screwdriver Ø 3.5 mm Ø 0.138 in

Recommendation for best usage: in horizontal assemblies, disconnect terminal blocks should be mounted with fixed foot on top (power side) so that the disconnect knife does not partially close through gravity. Furthermore, as specified per IEC 60947-7-1, disconnect terminal blocks are intended to be used for temporary disconnection at zero potential and at no load.

The connecting capacity data for one Rigid: Solid/Stranded, or one Flexible conductor (when applicable) is a mandatory information required by IEC, UL and CSA standards (Copper conductors). All other data are provided as supplementary information only. For more details, please consult our CB, UL or CSA certificates and technical datasheet available on http://www.TE.com

CE CB RoHS USR CNR CSA EAC BV

Accessories

	Description			Color	Type	Part Number		Pkg qty	Weight (1 pce) g
1	**End stops**	5.2 mm	0.205 in	Dark grey	BAZ1	1SNK900002R0000		50	5.30
2	**End sections**	2 mm	0.158 in	Dark grey	EK2.5-S-4P	1SNK705913R0000		20	2.94
3	**Jumper bars**	2 poles	32 A (IEC)	Orange	JB5-2	1SNK905302R0000		50	1.30
		3 poles	32 A (IEC)		JB5-3	1SNK905303R0000		50	2.00
		4 poles	32 A (IEC)		JB5-4	1SNK905304R0000		50	2.70
		5 poles	32 A (IEC)		JB5-5	1SNK905305R0000		50	3.50
		10 poles	32 A (IEC)		JB5-10	1SNK905310R0000		30	7.10
		50 poles	32 A (IEC)		JB5-50	1SNK905350R0000		10	36.00
4	**Circuit separators**	3 mm	0.118 in	Dark grey	CS-R3	1SNK900107R0000		20	6.40
5	**Test adapters**	For test plugs DIA 2 mm 0.079 in		Dark grey	TP2	1SNK900203R0000		20	1.70
		For test plugs DIA 4 mm 0.157 in			TP4	1SNK900205R0000		20	2.40
6	**Test connectors**	5.2 mm 0.205 in spacing		Dark grey	TC5	1SNK900200R0000		10	5.20
		End module, 5.2 mm 0.205 in			TC5-R1	1SNK900201R0000		10	5.20
7	**Terminal block markers**	Blank marker		White	MG-CPM 13 41790	1SNB041790R0512		1960	0.23
		Blank card			MC512	1SNK140000R0000		22	9.00
					MC512PA	1SNK149999R0000		20	10.00
		Universal wire markers holder		Grey	UMH	1SNK900611R0000		10	0.20

Complete list of accessories is indicated in the terminal block datasheet including end stops.
Some accessories such as jumper bars may modify the terminal block's ratings: Complete information available in the accessories section of the catalog.

1SNK162069S0201

Technical data valid for copper conductors only.

ZK2.5-S-R1 PI-Spring terminal blocks

Disconnect with blade - 6 mm 0.236 in spacing

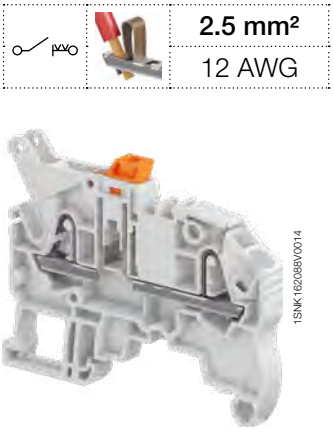

2.5 mm²
12 AWG

Description

Simplify the distribution of circuits in marshalling cabinets thanks to our disconnect terminal blocks with the same profile as ZK2.5-SF fuse.

1SNK162088V0014

ZK2.5-S-R1

Ordering details

Description		Color	Type	Part Number		Pkg qty	Weight (1 pce) g
Disconnect	Profile aligned with ZK2.5-SF	Grey	ZK2.5-S-R1	1SNK706310R0000		50	8.90

Main technical data

Connecting capacity		IEC	UL - CSA
1 conductor per clamp	Rigid: Solid/Stranded	0.2 ... 4 mm²	26 ... 12 AWG
	Flexible without ferrule	0.22 ... 2.5 mm²	
	Flexible with non insulated ferrule	0.22 ... 2.5 mm²	26 ... 14 AWG
	Flexible with insulated ferrule	0.22 ... 2.5 mm²	26 ... 14 AWG
2 conductors per clamp	Flexible with twin ferrule	0.22 ... 0.5 mm²	26 ... 20 AWG
Rated current / Rated cross section		20 A / 2.5 mm²	20 A / 12 AWG
Rated short-time withstand current (1s)		300 A	396 A
Rated voltage		630 V	300 V
Impulse withstand voltage		6000 V	
Protection		IP20	NEMA 1

Mounting instructions

Rail		TH 35-7.5, TH 35-15
Wire stripping length		11 mm 0.433 in
Tool (for flexible conductor without ferrule)		Flat screwdriver Ø 3.5 mm Ø 0.138 in

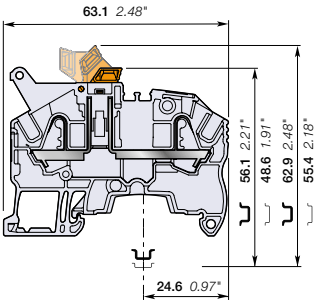

6 mm 0.236 in spacing

Recommendation for best usage: in horizontal assemblies, disconnect terminal blocks should be mounted with fixed foot on top (power side) so that the disconnect knife does not partially close through gravity. Furthermore, as specified per IEC 60947-7-1, disconnect terminal blocks are intended to be used for temporary disconnection at zero potential and at no load.

The connecting capacity data for one Rigid: Solid/Stranded, or one Flexible conductor (when applicable) is a mandatory information required by IEC, UL and CSA standards (Copper conductors). All other data are provided as supplementary information only. For more details, please consult our CB, UL or CSA certificates and technical datasheet available on http://www.TE.com

CE CB RoHS USR CNR CSA EAC BV DNV

Accessories

	Description			Color	Type	Part Number		Pkg qty	Weight (1 pce) g
1	End stops	5.2 mm	0.205 in	Dark grey	BAZ1	1SNK900002R0000		50	5.30
2	End sections	2 mm	0.079 in	Dark grey	EK2.5-3P	1SNK705911R0000		20	2.40
3	Jumper bars	2 poles	41 A (IEC)	Orange	JB6-2	1SNK906302R0000		50	1.30
		3 poles	41 A (IEC)		JB6-3	1SNK906303R0000		50	2.10
		4 poles	41 A (IEC)		JB6-4	1SNK906304R0000		50	2.90
		5 poles	41 A (IEC)		JB6-5	1SNK906305R0000		50	3.60
		10 poles	41 A (IEC)		JB6-10	1SNK906310R0000		20	7.40
		50 poles	41 A (IEC)		JB6-50	1SNK906350R0000		10	38.10
4	Circuit separators	3 mm	0.118 in	Dark grey	CS-R3	1SNK900107R0000		20	6.40
5	Test adapters	For test plugs DIA 2 mm 0.079 in		Dark grey	TP2	1SNK900203R0000		20	1.70
		For test plugs DIA 4 mm 0.157 in			TP4	1SNK900205R0000		20	2.40
6	Test connectors	End module, 5.2 mm 0.205 in		Dark grey	TC5-R1	1SNK900201R0000		10	5.20
7	Spacers	0.8 mm	0.031 in	Dark grey	ES-TC6	1SNK900105R0000		10	0.80
8	Terminal block markers	Blank marker		White	MG-CPM 13 41791	1SNB041791R0612		1680	0.27
		Blank card			MC612	1SNK150000R0000		22	10.00
					MC612PA	1SNK159999R0000		20	11.00
		Universal wire markers holder		Grey	UMH	1SNK900611R0000		10	0.20

Complete list of accessories is indicated in the terminal block datasheet including end stops.
Some accessories such as jumper bars may modify the terminal block's ratings: Complete information available in the accessories section of the catalog.

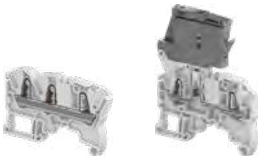

ZK4-3P ZK2.5-SF

PI-Spring terminal blocks

Description	Color	Type	Part Number		Pkg qty	Weight (1 pce) g
Feed-through	Grey	ZK4-3P	1SNK706011R0000		50	11.00
Fuse	Grey, dark grey	ZK2.5-SF	1SNK706410R0000		50	16.20

1SNK162037S0201

Technical data valid for copper conductors only.

ZK2.5-SP PI-Spring terminal blocks

Disconnect with plug - with test sockets - 5.2 mm 0.205 in spacing

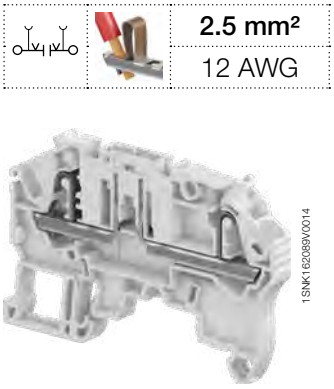

1SNK162089V0014

ZK2.5-SP

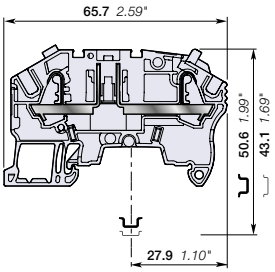

5.2 mm 0.205 in spacing

2.5 mm²
12 AWG

Description

The flexible solution for fitting the component of your choice in series with our quick-fitting PG5 component holder plug:

– compatible with components of 8.8 x 3.2 mm 0.346 x 0.125 in, such as resistors, diodes or mini axial fuses.

Ordering details

Description		Color	Type	Part Number		Pkg qty	Weight (1 pce) g
Disconnect	with 2 test sockets DIA 2 mm 0.079 in	Grey	ZK2.5-SP	1SNK705311R0000		50	11.50

Main technical data

Connecting capacity		IEC	UL - CSA
1 conductor per clamp	Rigid: Solid/Stranded	0.2 ... 4 mm²	26 ... 12 AWG
	Flexible without ferrule	0.22 ... 2.5 mm²	
	Flexible with non insulated ferrule	0.22 ... 2.5 mm²	26 ... 14 AWG
	Flexible with insulated ferrule	0.22 ... 2.5 mm²	26 ... 14 AWG
2 conductors per clamp	Flexible with twin ferrule	0.22 ... 0.5 mm²	26 ... 20 AWG
Rated current / Rated cross section		17 A / 2.5 mm²	18 A / 12 AWG
Rated short-time withstand current (1s)		300 A	396 A
Rated voltage		630 V	300 V
Impulse withstand voltage		6000 V	
Protection		IP20	NEMA 1

Mounting instructions

Rail	TH 35-7.5, TH 35-15
Wire stripping length	11 mm 0.433 in
Tool (for flexible conductor without ferrule)	Flat screwdriver Ø 3.5 mm Ø 0.138 in

The connecting capacity data for one Rigid: Solid/Stranded, or one Flexible conductor (when applicable) is a mandatory information required by IEC, UL and CSA standards (Copper conductors). All other data are provided as supplementary information only. For more details, please consult our CB, UL or CSA certificates and technical datasheet available on http://www.TE.com

CE, CB, RoHS, USR CNR, CSA, EAC, BV, DNV

Accessories

	Description			Color	Type	Part Number		Pkg qty	Weight (1 pce) g
1	**End stops**	5.2 mm	0.205 in	Dark grey	BAZ1	1SNK900002R0000		50	5.30
2	**End sections**	2 mm	0.079 in	Dark grey	EK2.5-3P	1SNK705911R0000		20	2.40
3	**Jumper bars**	2 poles	32 A (IEC)	Orange	JB5-2	1SNK905302R0000		50	1.30
		3 poles	32 A (IEC)		JB5-3	1SNK905303R0000		50	2.00
		4 poles	32 A (IEC)		JB5-4	1SNK905304R0000		50	2.70
		5 poles	32 A (IEC)		JB5-5	1SNK905305R0000		50	3.50
		10 poles	32 A (IEC)		JB5-10	1SNK905310R0000		30	7.10
		50 poles	32 A (IEC)		JB5-50	1SNK905350R0000		10	36.00
4	**Circuit separators**	3 mm	0.118 in	Dark grey	CS-R3	1SNK900107R0000		20	6.40
5	**Test adapters**	For test plugs DIA 2 mm 0.079 in		Dark grey	TP2	1SNK900203R0000		20	1.70
		For test plugs DIA 4 mm 0.157 in			TP4	1SNK900205R0000		20	2.40
6	**Test connectors**	5.2 mm 0.205 in spacing		Dark grey	TC5	1SNK900200R0000		10	5.20
		End module, 5.2 mm 0.205 in			TC5-R1	1SNK900201R0000		10	5.20
7	**Shield connectors**				SHBP	1SNK900601R0000		20	4.10
8	**Component plugs**	Components in series with circuit		Dark grey	PG5	1SNK900401R0000		20	3.50
9	**Disconnect plugs**	Equipped with linking bar		Orange	PG5-R1	1SNK900402R0000		20	3.50
10	**Terminal block markers**	Blank marker		White	MG-CPM 13 41790	1SNB041790R0512		1960	0.23
		Blank card			MC512	1SNK140000R0000		22	9.00
					MC512PA	1SNK149999R0000		20	10.00
		Universal wire markers holder		Grey	UMH	1SNK900611R0000		10	0.20

Complete list of accessories is indicated in the terminal block datasheet including end stops.
Some accessories such as jumper bars may modify the terminal block's ratings: Complete information available in the accessories section of the catalog.

1SNK162038S0201

Technical data valid for copper conductors only.

ZK2.5-SP-4P PI-Spring terminal blocks

Disconnect with plug - with test socket - 5.2 mm 0.205 in spacing

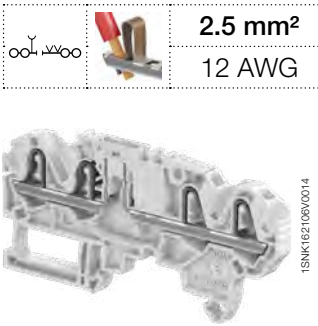

ZK2.5-SP-4P

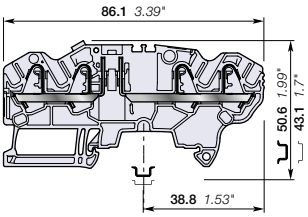

5.2 mm 0.205 in spacing

	2.5 mm²
	12 AWG

Description

The flexible solution for fitting the component of your choice in series with our quick-fitting PG5 component holder plug:

– compatible with components of 8.8 x 3.2 mm 0.346 x 0.125 in, such as resistors, diodes or mini axial fuses.

Ordering details

Description		Color	Type	Part Number		Pkg qty	Weight (1 pce) g
Disconnect	with 1 test socket DIA 2 mm 0.079 in	Grey	ZK2.5-SP-4P	1SNK705313R0000		50	10.67

Main technical data

Connecting capacity		IEC	UL - CSA
1 conductor per clamp	Rigid: Solid/Stranded	0.2 ... 4 mm²	26 ... 12 AWG
	Flexible without ferrule	0.22 ... 2.5 mm²	
	Flexible with non insulated ferrule	0.22 ... 2.5 mm²	26 ... 14 AWG
	Flexible with insulated ferrule	0.22 ... 2.5 mm²	26 ... 14 AWG
2 conductors per clamp	Flexible with twin ferrule	0.22 ... 0.5 mm²	26 ... 20 AWG
Rated current / Rated cross section		17 A / 2.5 mm²	18 A / 12 AWG
Rated short-time withstand current (1s)		300 A	
Short Circuit Current Rating (with specific conditions)			
Rated voltage		630 V	300 V
Impulse withstand voltage		6000 V	
Protection		IP20	NEMA 1

Mounting instructions

Rail		TH 35-7.5, TH 35-15
Wire stripping length		11 mm 0.433 in
Tool (for flexible conductor without ferrule)		Flat screwdriver Ø 3.5 mm Ø 0.138 in

The connecting capacity data for one Rigid: Solid/Stranded, or one Flexible conductor (when applicable) is a mandatory information required by IEC, UL and CSA standards (Copper conductors). All other data are provided as supplementary information only. For more details, please consult our CB, UL or CSA certificates and technical datasheet available on http://www.TE.com

CE CB RoHS USR CNR CSA EAC BV

Accessories

	Description			Color	Type	Part Number		Pkg qty	Weight (1 pce) g
1	**End stops**	5.2 mm	0.205 in	Dark grey	BAZ1	1SNK900002R0000		50	5.30
2	**End sections**	2 mm	0.158 in	Dark grey	EK2.5-S-4P	1SNK705913R0000		20	2.94
3	**Jumper bars**	2 poles	32 A (IEC)	Orange	JB5-2	1SNK905302R0000		50	1.30
		3 poles	32 A (IEC)		JB5-3	1SNK905303R0000		50	2.00
		4 poles	32 A (IEC)		JB5-4	1SNK905304R0000		50	2.70
		5 poles	32 A (IEC)		JB5-5	1SNK905305R0000		50	3.50
		10 poles	32 A (IEC)		JB5-10	1SNK905310R0000		30	7.10
		50 poles	32 A (IEC)		JB5-50	1SNK905350R0000		10	36.00
4	**Circuit separators**	3 mm	0.118 in	Dark grey	CS-R3	1SNK900107R0000		20	6.40
5	**Test adapters**	For test plugs DIA 2 mm 0.079 in		Dark grey	TP2	1SNK900203R0000		20	1.70
		For test plugs DIA 4 mm 0.157 in			TP4	1SNK900205R0000		20	2.40
6	**Test connectors**	5.2 mm 0.205 in spacing		Dark grey	TC5	1SNK900200R0000		10	5.20
		End module, 5.2 mm 0.205 in			TC5-R1	1SNK900201R0000		10	5.20
7	**Component plugs**	Components in series with circuit		Dark grey	PG5	1SNK900401R0000		20	3.50
8	**Disconnect plugs**	Equipped with linking bar		Orange	PG5-R1	1SNK900402R0000		20	3.50
9	**Terminal block markers**	Blank marker		White	MG-CPM 13 41790	1SNB041790R0512		1960	0.23
		Blank card			MC512	1SNK140000R0000		22	9.00
					MC512PA	1SNK149999R0000		20	10.00
		Universal wire markers holder		Grey	UMH	1SNK900611R0000		10	0.20

Complete list of accessories is indicated in the terminal block datasheet including end stops.
Some accessories such as jumper bars may modify the terminal block's ratings: Complete information available in the accessories section of the catalog.

1SNK162070S0201

Technical data valid for copper conductors only.

ZK2.5-SF PI-Spring terminal blocks
For 5x20 fuses - 6 mm 0.236 in spacing

2.5 mm²
12 AWG

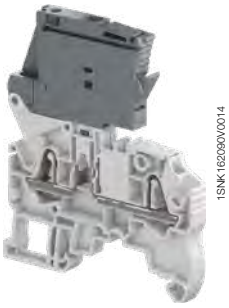

ZK2.5-SF

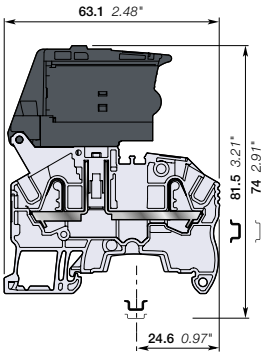

6 mm 0.236 in spacing

Description

Protect your circuits with 5x20 fuse terminal blocks compliant with IEC 60947-7-3 standard (fuse not supplied with the terminal blocks),

– Simplify the distribution thanks to the 2 jumper channels aligned with ZK4-3P feed-through and ZK2.5-S-R1 disconnect terminal blocks.

Ordering details

Description	Color	Type	Part Number		Pkg qty	Weight (1 pce) g
Fuse	Grey, dark grey	ZK2.5-SF	1SNK706410R0000		50	16.20

Main technical data

Connecting capacity		IEC	UL - CSA
1 conductor per clamp	Rigid: Solid/Stranded	0.2 ... 4 mm²	26 ... 12 AWG
	Flexible without ferrule	0.22 ... 2.5 mm²	
	Flexible with non insulated ferrule	0.22 ... 2.5 mm²	26 ... 14 AWG
	Flexible with insulated ferrule	0.22 ... 2.5 mm²	26 ... 14 AWG
2 conductors per clamp	Flexible with twin ferrule	0.22 ... 0.5 mm²	26 ... 20 AWG
Rated current / Rated cross section		6.3 A / 2.5 mm²	16 A / 12 AWG
Rated short-time withstand current (1s)			396 A
Rated voltage		500 V	300 V
Impulse withstand voltage		6000 V	
Protection		IP20	NEMA 1

Mounting instructions

Rail		TH 35-7.5, TH 35-15
Wire stripping length		11 mm 0.433 in
Tool (for flexible conductor without ferrule)		Flat screwdriver Ø 3.5 mm Ø 0.138 in

The fuse holder must be first disconnected prior any fuse replacement. Mount your fuse safely without touching any active part: put the fuse into the hooks of the fuse holder shutter; at the closing of the shutter, the fuse is perfectly in place in the fuse holder.

Separate arrangement		Assembly composed of 1 fuse terminal block in between non fuse terminal blocks	Overload and short-circuit protection	2.5 W
			Exclusive short-circuit protection	4 W
Compound arrangement		Assembly composed of 5 fuse terminal blocks	Overload and short-circuit protection	1.6 W
			Exclusive short-circuit protection	4 W

The connecting capacity data for one Rigid: Solid/Stranded, or one Flexible conductor (when applicable) is a mandatory information required by IEC, UL and CSA standards (Copper conductors). All other data are provided as supplementary information only. For more details, please consult our CB, UL or CSA certificates and technical datasheet available on http://www.TE.com

CE | CB | RoHS | USR CNR | CSA | EAC | BV | DNV

Accessories

	Description			Color	Type	Part Number		Pkg qty	Weight (1 pce) g
1	End stops	5.2 mm	0.205 in	Dark grey	BAZ1	1SNK900002R0000		50	5.30
2	End sections	2 mm	0.079 in	Dark grey	EK2.5-3P	1SNK705911R0000		20	2.40
3	Jumper bars	2 poles	41 A (IEC)	Orange	JB6-2	1SNK906302R0000		50	1.30
		3 poles	41 A (IEC)		JB6-3	1SNK906303R0000		50	2.10
		4 poles	41 A (IEC)		JB6-4	1SNK906304R0000		50	2.90
		5 poles	41 A (IEC)		JB6-5	1SNK906305R0000		50	3.60
		10 poles	41 A (IEC)		JB6-10	1SNK906310R0000		20	7.40
		50 poles	41 A (IEC)		JB6-50	1SNK906350R0000		10	38.10
4	Circuit separators	3 mm	0.118 in	Dark grey	CS-R3	1SNK900107R0000		20	6.40
5	Test adapters	For test plugs DIA 2 mm 0.079 in		Dark grey	TP2	1SNK900203R0000		20	1.70
		For test plugs DIA 4 mm 0.157 in			TP4	1SNK900205R0000		20	2.40
6	Test connectors	End module, 5.2 mm 0.205 in		Dark grey	TC5-R1	1SNK900201R0000		10	5.20
7	Spacers	0.8 mm	0.031 in	Dark grey	ES-TC6	1SNK900105R0000		10	0.80
8	Terminal block markers	Blank marker		White	MG-CPM 13 41791	1SNB041791R0612		1680	0.27
		Blank card			MC612	1SNK150000R0000		22	10.00
					MC612PA	1SNK159999R0000		20	11.00

Complete list of accessories is indicated in the terminal block datasheet including end stops.
Some accessories such as jumper bars may modify the terminal block's ratings: Complete information available in the accessories section of the catalog.

1SNK162021S0201

Technical data valid for copper conductors only.

ZK2.5-SF-R PI-Spring terminal blocks

For 5x20 fuses - with blown fuse indicator - 6 mm 0.236 in spacing

2.5 mm²	
12 AWG	

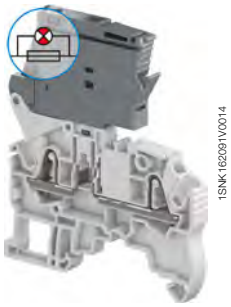

ZK2.5-SF-R

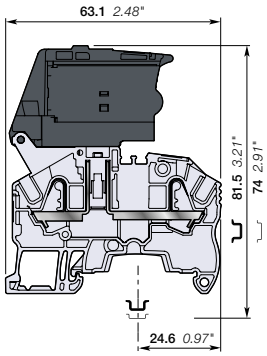

6 mm 0.236 in spacing

Description

- Protect your circuits with 5x20 fuse terminal blocks compliant with IEC 60947-7-3 standard (fuse not supplied with the terminal blocks),
- Simplify the distribution thanks to the 2 jumper channels aligned with ZK4-3P feed-through and ZK2.5-S-R1 disconnect terminal blocks,
- Quickly identify the defective circuit thanks to the blown fuse indicator (with leakage current < 0.5 mA).

Ordering details

Description		Color	Type	Part Number		Pkg qty	Weight (1 pce) g
Fuse	with blown fuse indicator 24 ... 110 V AC / DC	Grey, dark grey	ZK2.5-SF-R1	1SNK706411R0000		50	16.30
	with blown fuse indicator 115 ... 250 V AC / DC		ZK2.5-SF-R3	1SNK706412R0000		50	16.30

Main technical data

Connecting capacity		IEC	UL - CSA
1 conductor per clamp	Rigid: Solid/Stranded	0.2 ... 4 mm²	26 ... 12 AWG
	Flexible without ferrule	0.22 ... 2.5 mm²	
	Flexible with non insulated ferrule	0.22 ... 2.5 mm²	26 ... 14 AWG
	Flexible with insulated ferrule	0.22 ... 2.5 mm²	26 ... 14 AWG
2 conductors per clamp	Flexible with twin ferrule	0.22 ... 0.5 mm²	26 ... 20 AWG
Rated current / Rated cross section		6.3 A / 2.5 mm²	16 A / 12 AWG
Rated short-time withstand current (1s)			396 A
Rated voltage		500 V	300 V
Impulse withstand voltage		6000 V	
Protection		IP20	NEMA 1

Mounting instructions

Rail		TH 35-7.5, TH 35-15
Wire stripping length		11 mm 0.433 in
Tool (for flexible conductor without ferrule)		Flat screwdriver Ø 3.5 mm Ø 0.138 in

The fuse holder must be first disconnected prior any fuse replacement. Mount your fuse safely without touching any active part: put the fuse into the hooks of the fuse holder shutter; at the closing of the shutter, the fuse is perfectly in place in the fuse holder.

Separate arrangement	Assembly composed of 1 fuse terminal block in between non fuse terminal blocks	Overload and short-circuit protection	2.5 W
		Exclusive short-circuit protection	4 W
Compound arrangement	Assembly composed of 5 fuse terminal blocks	Overload and short-circuit protection	1.6 W
		Exclusive short-circuit protection	4 W

The connecting capacity data for one Rigid: Solid/Stranded, or one Flexible conductor (when applicable) is a mandatory information required by IEC, UL and CSA standards (Copper conductors). All other data are provided as supplementary information only. For more details, please consult our CB, UL or CSA certificates and technical datasheet available on http://www.TE.com

CE CB RoHS USR CNR CSA EAC BV DNV

Accessories

	Description			Color	Type	Part Number		Pkg qty	Weight (1 pce) g
1	**End stops**	5.2 mm	0.205 in	Dark grey	BAZ1	1SNK900002R0000		50	5.30
2	**End sections**	2 mm	0.079 in	Dark grey	EK2.5-3P	1SNK705911R0000		20	2.40
3	**Jumper bars**	2 poles	41 A (IEC)	Orange	JB6-2	1SNK906302R0000		50	1.30
		3 poles	41 A (IEC)		JB6-3	1SNK906303R0000		50	2.10
		4 poles	41 A (IEC)		JB6-4	1SNK906304R0000		50	2.90
		5 poles	41 A (IEC)		JB6-5	1SNK906305R0000		50	3.60
		10 poles	41 A (IEC)		JB6-10	1SNK906310R0000		20	7.40
		50 poles	41 A (IEC)		JB6-50	1SNK906350R0000		10	38.10
4	**Circuit separators**	3 mm	0.118 in	Dark grey	CS-R3	1SNK900107R0000		20	6.40
5	**Test adapters**	For test plugs DIA 2 mm 0.079 in		Dark grey	TP2	1SNK900203R0000		20	1.70
		For test plugs DIA 4 mm 0.157 in			TP4	1SNK900205R0000		20	2.40
6	**Test connectors**	End module, 5.2 mm 0.205 in		Dark grey	TC5-R1	1SNK900201R0000		10	5.20
7	**Spacers**	0.8 mm	0.031 in	Dark grey	ES-TC6	1SNK900105R0000		10	0.80
8	**Terminal block markers**	Blank marker		White	MG-CPM 13 41791	1SNB041791R0612		1680	0.27
		Blank card			MC612	1SNK150000R0000		22	10.00
					MC612PA	1SNK159999R0000		20	11.00

Complete list of accessories is indicated in the terminal block datasheet including end stops.
Some accessories such as jumper bars may modify the terminal block's ratings: Complete information available in the accessories section of the catalog.

1SNK162022S0201

Technical data valid for copper conductors only.

ZK2.5-D2 PI-Spring terminal blocks

Double deck with 2 feed-through circuits - 5.2 mm 0.205 in spacing

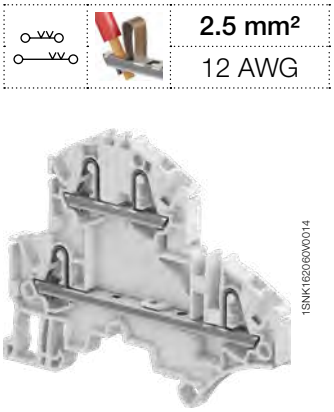

2.5 mm²	
12 AWG	

1SNK162060V0014

ZK2.5-D2

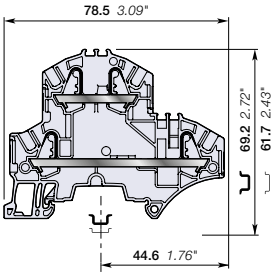

5.2 mm 0.205 in spacing

Description

Combine high performance with compact dimensions:

- 800 V IEC 600 V UL,
- 2 jumper channels and a large input and output marker zone on each deck.

Ordering details

Description		Color	Type	Part Number		Pkg qty	Weight (1 pce) g
Feed-through	2 feed-through circuits	Grey	ZK2.5-D2	1SNK705210R0000		50	11.20
		Blue	ZK2.5-D2-BL	1SNK705220R0000		50	11.20

Main technical data

Connecting capacity		IEC	UL - CSA
1 conductor per clamp	Rigid: Solid/Stranded	0.2 ... 4 mm²	26 ... 12 AWG
	Flexible without ferrule	0.22 ... 2.5 mm²	
	Flexible with non insulated ferrule	0.22 ... 2.5 mm²	26 ... 14 AWG
	Flexible with insulated ferrule	0.22 ... 2.5 mm²	26 ... 14 AWG
2 conductors per clamp	Flexible with twin ferrule	0.22 ... 0.5 mm²	26 ... 20 AWG
Rated current / Rated cross section		24 A / 2.5 mm²	20 A / 12 AWG
Rated short-time withstand current (1s)		300 A	396 A
Short Circuit Current Rating (with specific conditions)			100 kA
Rated voltage		800 V	600 V
Impulse withstand voltage		8000 V	
Protection		IP20	NEMA 1
Increased safety Ex e		693 V 21 A IEC/EN 60079-7 - IM2 II 2 GD Ex eb I/IIC/IIIC	

Mounting instructions

Rail		TH 35-7.5, TH 35-15
Wire stripping length		11 mm 0.433 in
Tool (for flexible conductor without ferrule)		Flat screwdriver Ø 3.5 mm Ø 0.138 in

The connecting capacity data for one Rigid: Solid/Stranded, or one Flexible conductor (when applicable) is a mandatory information required by IEC, UL and CSA standards (Copper conductors). All other data are provided as supplementary information only. For more details, please consult our CB, UL or CSA certificates and technical datasheet available on http://www.TE.com

CE, CB, RoHS, USR CNR, CSA, EAC Ex, ATEX, IECEx, Haz Loc, BV, DNV

Accessories

	Description			Color	Type	Part Number		Pkg qty	Weight (1 pce) g
1	**End stops**	10 mm	0.394 in	Dark grey	BAZH1	1SNK900102R0000		20	24.00
2	**End sections**	2 mm	0.079 in	Dark grey	EK2.5-D2	1SNK705960R0000		20	3.40
3	**Jumper bars**	2 poles	32 A (IEC)	Orange	JB5-2	1SNK905302R0000		50	1.30
		3 poles	32 A (IEC)		JB5-3	1SNK905303R0000		50	2.00
		4 poles	32 A (IEC)		JB5-4	1SNK905304R0000		50	2.70
		5 poles	32 A (IEC)		JB5-5	1SNK905305R0000		50	3.50
		10 poles	32 A (IEC)		JB5-10	1SNK905310R0000		30	7.10
		50 poles	32 A (IEC)		JB5-50	1SNK905350R0000		10	36.00
4	**Test adapters**	For test plugs DIA 2 mm 0.079 in		Dark grey	TP2	1SNK900203R0000		20	1.70
		For test plugs DIA 4 mm 0.157 in			TP4	1SNK900205R0000		20	2.40
5	**Test connectors**	5.2 mm 0.205 in spacing		Dark grey	TC5	1SNK900200R0000		10	5.20
		End module, 5.2 mm 0.205 in			TC5-R1	1SNK900201R0000		10	5.20
6	**Shield connectors**				SHB	1SNK900602R0000		20	4.90
7	**Label holders**			Dark grey	LH-J	1SNK900606R0000		100	0.73
8	**Terminal block markers**	Blank marker		White	MG-CPM 13 41790	1SNB041790R0512		1960	0.23
		Blank card			MC512	1SNK140000R0000		22	9.00
					MC512PA	1SNK149999R0000		20	10.00
		Universal wire markers holder		Grey	UMH	1SNK900611R0000		10	0.20

Complete list of accessories is indicated in the terminal block datasheet including end stops.
Some accessories such as jumper bars may modify the terminal block's ratings: Complete information available in the accessories section of the catalog.

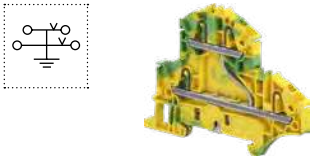

Ground PI-Spring terminal blocks

Description		Color	Type	Part Number		Pkg qty	Weight (1 pce) g
Ground	Profile aligned with ZK2.5-D2 and ZK2.5-D1	Green-yellow	ZK2.5-D1-PE	1SNK705250R0000		20	15.70

1SNK162033S0201

Technical data valid for copper conductors only.

ZK2.5-D1 PI-Spring terminal blocks

Double deck with 1 feed-through circuit - 5.2 mm 0.205 in spacing

1SNK162078V0014

ZK2.5-D1

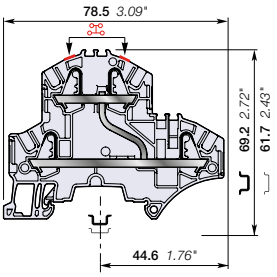

5.2 mm 0.205 in spacing

2.5 mm²
12 AWG

Description

– Find the same functionalities as ZK2.5-D2 and ease one potential distribution on 4 independent connections.

Ordering details

Description		Color	Type	Part Number		Pkg qty	Weight (1 pce) g
Feed-through	1 feed-through circuit	Grey	ZK2.5-D1	1SNK705211R0000		50	11.20

Main technical data

Connecting capacity		IEC	UL - CSA
1 conductor per clamp	Rigid: Solid/Stranded	0.2 ... 4 mm²	26 ... 12 AWG
	Flexible without ferrule	0.22 ... 2.5 mm²	
	Flexible with non insulated ferrule	0.22 ... 2.5 mm²	26 ... 14 AWG
	Flexible with insulated ferrule	0.22 ... 2.5 mm²	26 ... 14 AWG
2 conductors per clamp	Flexible with twin ferrule	0.22 ... 0.5 mm²	26 ... 20 AWG
Rated current / Rated cross section		24 A / 2.5 mm²	20 A / 12 AWG
Rated short-time withstand current (1s)		300 A	396 A
Short Circuit Current Rating (with specific conditions)			100 kA
Rated voltage		800 V	600 V
Impulse withstand voltage		8000 V	
Protection		IP20	NEMA 1
Increased safety Ex e		693 V 21 A IEC/EN 60079-7 - IM2 II 2 GD Ex eb I/IIC/IIIC	

Mounting instructions

Rail		TH 35-7.5, TH 35-15
Wire stripping length		11 mm 0.433 in
Tool (for flexible conductor without ferrule)		Flat screwdriver Ø 3.5 mm Ø 0.138 in

The connecting capacity data for one Rigid: Solid/Stranded, or one Flexible conductor (when applicable) is a mandatory information required by IEC, UL and CSA standards (Copper conductors). All other data are provided as supplementary information only. For more details, please consult our CB, UL or CSA certificates and technical datasheet available on http://www.TE.com

CE, CB, RoHS, USR CNR, CSA, EAC Ex, ATEX, IECEx, Haz Loc, BV, DNV

Accessories

	Description			Color	Type	Part Number		Pkg qty	Weight (1 pce) g
1	**End stops**	10 mm	0.394 in	Dark grey	BAZH1	1SNK900102R0000		20	24.00
2	**End sections**	2 mm	0.079 in	Dark grey	EK2.5-D2	1SNK705960R0000		20	3.40
3	**Jumper bars**	2 poles	32 A (IEC)	Orange	JB5-2	1SNK905302R0000		50	1.30
		3 poles	32 A (IEC)		JB5-3	1SNK905303R0000		50	2.00
		4 poles	32 A (IEC)		JB5-4	1SNK905304R0000		50	2.70
		5 poles	32 A (IEC)		JB5-5	1SNK905305R0000		50	3.50
		10 poles	32 A (IEC)		JB5-10	1SNK905310R0000		30	7.10
		50 poles	32 A (IEC)		JB5-50	1SNK905350R0000		10	36.00
4	**Test adapters**	For test plugs DIA 2 mm 0.079 in		Dark grey	TP2	1SNK900203R0000		20	1.70
		For test plugs DIA 4 mm 0.157 in			TP4	1SNK900205R0000		20	2.40
5	**Test connectors**	5.2 mm 0.205 in spacing		Dark grey	TC5	1SNK900200R0000		10	5.20
		End module, 5.2 mm 0.205 in			TC5-R1	1SNK900201R0000		10	5.20
6	**Shield connectors**				SHB	1SNK900602R0000		20	4.90
7	**Label holders**			Dark grey	LH-J	1SNK900606R0000		100	0.73
8	**Terminal block markers**	Blank marker		White	MG-CPM 13 41790	1SNB041790R0512		1960	0.23
		Blank card			MC512	1SNK140000R0000		22	9.00
					MC512PA	1SNK149999R0000		20	10.00
		Universal wire markers holder		Grey	UMH	1SNK900611R0000		10	0.20

Complete list of accessories is indicated in the terminal block datasheet including end stops.
Some accessories such as jumper bars may modify the terminal block's ratings: Complete information available in the accessories section of the catalog.

Ground PI-Spring terminal blocks

Description		Color	Type	Part Number		Pkg qty	Weight (1 pce) g
Ground	Profile aligned with ZK2.5-D2 and ZK2.5-D1	Green-yellow	ZK2.5-D1-PE	1SNK705250R0000		20	15.70

1SNK162035S0201

Technical data valid for copper conductors only.

ZK2.5-D2-PE PI-Spring terminal blocks

Double deck with 1 feed-through circuit and 1 ground circuit - 5.2 mm 0.205 in spacing

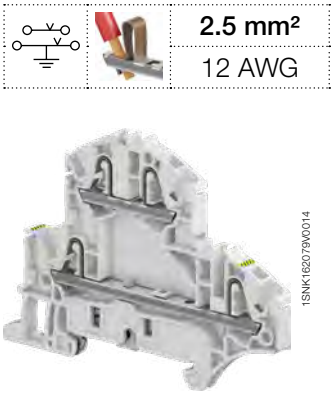

2.5 mm²
12 AWG

1SNK162079W0014

ZK2.5-D2-PE

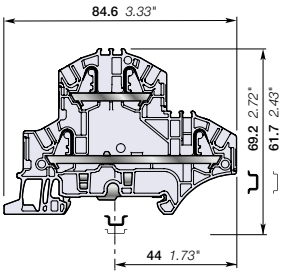

5.2 mm 0.205 in spacing

Description

Combine high performance with compact dimensions:

- 800 V IEC 600 V UL,
- 1 feed through circuit and 1 ground circuit in just 5.2 mm 0.205 in spacing,
- 2 jumper channels and a large input and output marker zone on each deck,
- designed for easy wiring.

Ordering details

Description		Color	Type	Part Number		Pkg qty	Weight (1 pce) g
Feed-through + ground	1 feed-through circuit and 1 ground circuit	Grey, Green-yellow	ZK2.5-D2-PE	1SNK705212R0000		20	15.70

Main technical data

Connecting capacity		IEC	UL - CSA
1 conductor per clamp	Rigid: Solid/Stranded	0.2 ... 4 mm²	26 ... 12 AWG
	Flexible without ferrule	0.22 ... 2.5 mm²	
	Flexible with non insulated ferrule	0.22 ... 2.5 mm²	26 ... 14 AWG
	Flexible with insulated ferrule	0.22 ... 2.5 mm²	26 ... 14 AWG
2 conductors per clamp	Flexible with twin ferrule	0.22 ... 0.5 mm²	26 ... 20 AWG
Rated current / Rated cross section		24 A / 2.5 mm²	20 A / 12 AWG
Rated short-time withstand current (1s)		300 A	396 A
Short Circuit Current Rating (with specific conditions)			
Rated voltage		800 V	600 V
Impulse withstand voltage		8000 V	
Protection		IP20	NEMA 1
Increased safety Ex e		693 V 21 A IEC/EN 60079-7 - IM2 II 2 GD Ex eb I/IIC/IIIC	

Mounting instructions

Rail		TH 35-7.5, TH 35-15
Wire stripping length		11 mm 0.433 in
Tool (for flexible conductor without ferrule)		Flat screwdriver Ø 3.5 mm Ø 0.138 in

The connecting capacity data for one Rigid: Solid/Stranded, or one Flexible conductor (when applicable) is a mandatory information required by IEC, UL and CSA standards (Copper conductors). All other data are provided as supplementary information only. For more details, please consult our CB, UL or CSA certificates and technical datasheet available on http://www.TE.com

CE, CB, RoHS, USR CNR, CSA, EAC Ex, ATEX, IECEx, Haz Loc, BV, DNV

Accessories

	Description			Color	Type	Part Number		Pkg qty	Weight (1 pce) g
1	**End stops**	10 mm	0.394 in	Dark grey	BAZH1	1SNK900102R0000		20	24.00
2	**End sections**	2 mm	0.079 in	Dark grey	EK2.5-D2	1SNK705960R0000		20	3.40
3	**Jumper bars**	2 poles	32 A (IEC)	Orange	JB5-2	1SNK905302R0000		50	1.30
		3 poles	32 A (IEC)		JB5-3	1SNK905303R0000		50	2.00
		4 poles	32 A (IEC)		JB5-4	1SNK905304R0000		50	2.70
		5 poles	32 A (IEC)		JB5-5	1SNK905305R0000		50	3.50
		10 poles	32 A (IEC)		JB5-10	1SNK905310R0000		30	7.10
		50 poles	32 A (IEC)		JB5-50	1SNK905350R0000		10	36.00
4	**Test adapters**	For test plugs DIA 2 mm 0.079 in		Dark grey	TP2	1SNK900203R0000		20	1.70
		For test plugs DIA 4 mm 0.157 in			TP4	1SNK900205R0000		20	2.40
5	**Test connectors**	5.2 mm 0.205 in spacing		Dark grey	TC5	1SNK900200R0000		10	5.20
		End module, 5.2 mm 0.205 in			TC5-R1	1SNK900201R0000		10	5.20
6	**Shield connectors**				SHB	1SNK900602R0000		20	4.90
7	**Label holders**			Dark grey	LH-J	1SNK900606R0000		100	0.73
8	**Terminal block markers**	Blank marker		White	MG-CPM 13 41790	1SNB041790R0512		1960	0.23
		Blank card			MC512	1SNK140000R0000		22	9.00
					MC512PA	1SNK149999R0000		20	10.00
		Universal wire markers holder		Grey	UMH	1SNK900611R0000		10	0.20

Complete list of accessories is indicated in the terminal block datasheet including end stops.
Some accessories such as jumper bars may modify the terminal block's ratings: Complete information available in the accessories section of the catalog.

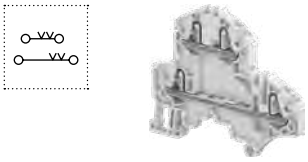

Feed-through PI-Spring terminal blocks

Description	Color	Type	Part Number		Pkg qty	Weight (1 pce) g
Feed-through	Grey	ZK2.5-D2	1SNK705210R0000		50	11.20

1SNK162034S0201

Technical data valid for copper conductors only.

ZK2.5-D1-PE PI-Spring terminal blocks

Double deck with 1 ground circuit - 5.2 mm 0.205 in spacing

2.5 mm²
12 AWG

1SNK162080V0014

ZK2.5-D1-PE

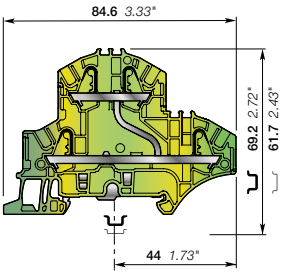

5.2 mm 0.205 in spacing

Description

Improve the safety of your installation in the event of a short-circuit thanks to our screwless rail contact:

- Rail contact non operator dependent,
- Performances above the requirements of the IEC 60947-7-2 terminal block standard,
- Secured snap on or off the rail,
- Profile aligned with ZK2.5-D2.

Ordering details

Description		Color	Type	Part Number		Pkg qty	Weight (1 pce) g
Ground	1 ground circuit	Green-yellow	ZK2.5-D1-PE	1SNK705250R0000		20	15.70

Main technical data

Connecting capacity		IEC	UL - CSA
1 conductor per clamp	Rigid: Solid/Stranded	0.2 ... 4 mm²	26 ... 12 AWG
	Flexible without ferrule	0.22 ... 2.5 mm²	
	Flexible with non insulated ferrule	0.22 ... 2.5 mm²	26 ... 14 AWG
	Flexible with insulated ferrule	0.22 ... 2.5 mm²	26 ... 14 AWG
Rated cross section		2.5 mm²	12 AWG
Rated short-time withstand current (1s)		300 A	396 A
Protection		IP20	NEMA 1
Explosive atmosphere classification		IM2 II 2 GD Ex eb I/IIC/IIIC – Class I, Zone 1, AEx e II, Ex e II U	

Mounting instructions

Rail		TH 35-7.5, TH 35-15
Wire stripping length		11 mm 0.433 in
Tool (for flexible conductor without ferrule)		Flat screwdriver Ø 3.5 mm Ø 0.138 in

The connecting capacity data for one Rigid: Solid/Stranded, or one Flexible conductor (when applicable) is a mandatory information required by IEC, UL and CSA standards (Copper conductors). All other data are provided as supplementary information only. For more details, please consult our CB, UL or CSA certificates and technical datasheet available on http://www.TE.com

CE, CB, RoHS, USR CNR, CSA, EAC Ex, ATEX, IECEx, Haz Loc, BV, DNV

Accessories

	Description			Color	Type	Part Number		Pkg qty	Weight (1 pce) g
1	**End stops**	10 mm	0.394 in	Dark grey	BAZH1	1SNK900102R0000		20	24.00
2	**End sections**	2 mm	0.079 in	Dark grey	EK2.5-D2	1SNK705960R0000		20	3.40
3	**Test adapters**	For test plugs DIA 2 mm 0.079 in		Dark grey	TP2	1SNK900203R0000		20	1.70
		For test plugs DIA 4 mm 0.157 in			TP4	1SNK900205R0000		20	2.40
4	**Test connectors**	5.2 mm 0.205 in spacing		Dark grey	TC5	1SNK900200R0000		10	5.20
		End module, 5.2 mm 0.205 in			TC5-R1	1SNK900201R0000		10	5.20
5	**Shield connectors**				SHB	1SNK900602R0000		20	4.90
6	**Label holders**			Dark grey	LH-J	1SNK900606R0000		100	0.73
7	**Terminal block markers**	Blank marker		White	MG-CPM 13 41790	1SNB041790R0512		1960	0.23
		Blank card			MC512	1SNK140000R0000		22	9.00
					MC512PA	1SNK149999R0000		20	10.00
		Universal wire markers holder		Grey	UMH	1SNK900611R0000		10	0.20

Complete list of accessories is indicated in the terminal block datasheet including end stops.
Some accessories such as jumper bars may modify the terminal block's ratings: Complete information available in the accessories section of the catalog.

1SNK162049S0201

Technical data valid for copper conductors only.

ZK2.5-T3 PI-Spring terminal blocks

Triple deck with 3 feed-through circuits - 5.2 mm 0.205 in spacing

2.5 mm²
12 AWG

1SNK162109V0014

ZK2.5-T3

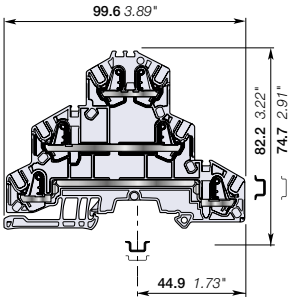

5.2 mm 0.205 in spacing

Description

Combine high performance with compact dimensions in just 5.2 mm 0.205 in spacing:
- 500 V IEC 300 V UL,
- 1 jumper channel and a large input and output marker zone on each deck.

Ordering details

Description		Color	Type	Part Number		Pkg qty	Weight (1 pce) g
Feed-through	3 feed-through circuits	Grey	ZK2.5-T3	1SNK705510R0000		25	17.33

Main technical data

Connecting capacity		IEC	UL - CSA
1 conductor per clamp	Rigid: Solid/Stranded	0.2 ... 4 mm²	26 ... 12 AWG
	Flexible without ferrule	0.22 ... 2.5 mm²	
	Flexible with non insulated ferrule	0.22 ... 2.5 mm²	26 ... 14 AWG
	Flexible with insulated ferrule	0.22 ... 2.5 mm²	26 ... 14 AWG
2 conductors per clamp	Flexible with twin ferrule	0.22 ... 0.5 mm²	26 ... 20 AWG
Rated current / Rated cross section		22 A / 2.5 mm²	20 A / 12 AWG
Rated short-time withstand current (1s)		300 A	
Short Circuit Current Rating (with specific conditions)			
Rated voltage		500 V	300 V
Impulse withstand voltage		8000 V	
Protection		IP20	NEMA 1
Increased safety Ex e		440 V 20 A IEC/EN 60079-7 - IM2 II 2 GD Ex eb I/IIC/IIIC	

Mounting instructions

Rail		TH 35-7.5, TH 35-15
Wire stripping length		11 mm 0.433 in
Tool (for flexible conductor without ferrule)		Flat screwdriver Ø 3.5 mm Ø 0.138 in

The connecting capacity data for one Rigid: Solid/Stranded, or one Flexible conductor (when applicable) is a mandatory information required by IEC, UL and CSA standards (Copper conductors). All other data are provided as supplementary information only. For more details, please consult our CB, UL or CSA certificates and technical datasheet available on http://www.TE.com

CE, CB, RoHS, USR CNR, CSA, EAC, ATEX, IECEx, BV

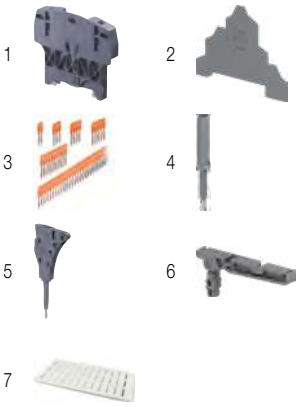

Accessories

	Description			Color	Type	Part Number		Pkg qty	Weight (1 pce) g
1	**End stops**	10 mm	0.394 in	Dark grey	BAZH1	1SNK900102R0000		20	24.00
2	**End sections**	0.8 mm	0.031 in	Dark grey	EK2.5-T3	1SNK705961R0000		20	4.76
3	**Jumper bars**	2 poles	32 A (IEC)	Orange	JB5-2	1SNK905302R0000		50	1.30
		3 poles	32 A (IEC)		JB5-3	1SNK905303R0000		50	2.00
		4 poles	32 A (IEC)		JB5-4	1SNK905304R0000		50	2.70
		5 poles	32 A (IEC)		JB5-5	1SNK905305R0000		50	3.50
		10 poles	32 A (IEC)		JB5-10	1SNK905310R0000		30	7.10
		50 poles	32 A (IEC)		JB5-50	1SNK905350R0000		10	36.00
4	**Test adapters**	For test plugs DIA 2 mm 0.079 in		Dark grey	TP2	1SNK900203R0000		20	1.70
		For test plugs DIA 4 mm 0.157 in			TP4	1SNK900205R0000		20	2.40
5	**Test connectors**	5.2 mm 0.205 in spacing		Dark grey	TC5	1SNK900200R0000		10	5.20
		End module, 5.2 mm 0.205 in			TC5-R1	1SNK900201R0000		10	5.20
6	**Label holders**			Dark grey	LH-J	1SNK900606R0000		100	0.73
7	**Terminal block markers**	Blank marker		White	MG-CPM 13 41790	1SNB041790R0512		1960	0.23
		Blank card			MC512	1SNK140000R0000		22	9.00
					MC512PA	1SNK149999R0000		20	10.00
		Universal wire markers holder		Grey	UMH	1SNK900611R0000		10	0.20

Complete list of accessories is indicated in the terminal block datasheet including end stops.
Some accessories such as jumper bars may modify the terminal block's ratings: Complete information available in the accessories section of the catalog.

Ground PI-Spring terminal blocks

Description	Color	Type	Part Number		Pkg qty	Weight (1 pce) g
Ground	Green-yellow	ZK2.5-T1-PE	1SNK705550R0000		25	21.53

1SNK162075S0201

Technical data valid for copper conductors only.

ZK2.5-T1 PI-Spring terminal blocks

Triple deck with 1 feed-through circuit - 5.2 mm 0.205 in spacing

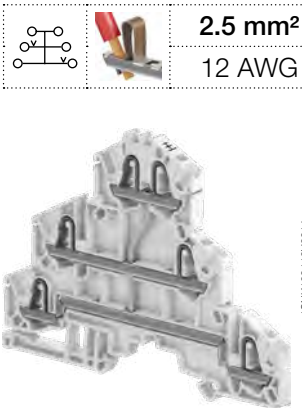

2.5 mm²
12 AWG

1SNK162110V0014

ZK2.5-T1

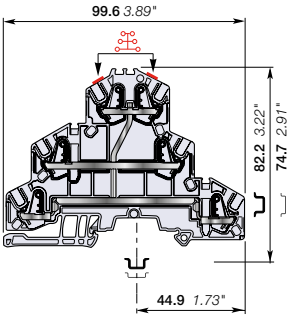

5.2 mm 0.205 in spacing

Description

Find the same functionalities as ZK2.5-T3 and ease one potential distribution on 6 independent connections.

Ordering details

Description		Color	Type	Part Number		Pkg qty	Weight (1 pce) g
Feed-through	1 feed-through circuit	Grey	ZK2.5-T1	1SNK705511R0000		25	17.33

Main technical data

Connecting capacity		IEC	UL - CSA
1 conductor per clamp	Rigid: Solid/Stranded	0.2 ... 4 mm²	26 ... 12 AWG
	Flexible without ferrule	0.22 ... 2.5 mm²	
	Flexible with non insulated ferrule	0.22 ... 2.5 mm²	26 ... 14 AWG
	Flexible with insulated ferrule	0.22 ... 2.5 mm²	26 ... 14 AWG
2 conductors per clamp	Flexible with twin ferrule	0.22 ... 0.5 mm²	26 ... 20 AWG
Rated current / Rated cross section		22 A / 2.5 mm²	20 A / 12 AWG
Rated short-time withstand current (1s)		300 A	
Short Circuit Current Rating (with specific conditions)			
Rated voltage		500 V	300 V
Impulse withstand voltage		8000 V	
Protection		IP20	NEMA 1
Increased safety Ex e		440 V 20 A IEC/EN 60079-7 - IM2 II 2 GD Ex eb I/IIC/IIIC	

The connecting capacity data for one Rigid: Solid/Stranded, or one Flexible conductor (when applicable) is a mandatory information required by IEC, UL and CSA standards (Copper conductors). All other data are provided as supplementary information only. For more details, please consult our CB, UL or CSA certificates and technical datasheet available on http://www.TE.com

CE, CB, RoHS, USR CNR, CSA, EAC, ATEX, IECEx, BV

Mounting instructions

Rail		TH 35-7.5, TH 35-15
Wire stripping length		11 mm 0.433 in
Tool (for flexible conductor without ferrule)		Flat screwdriver Ø 3.5 mm Ø 0.138 in

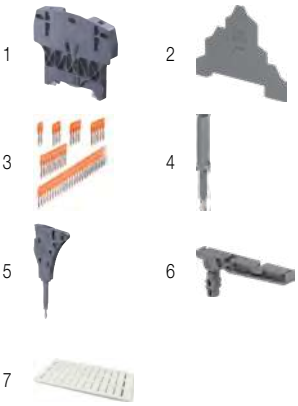

Accessories

	Description			Color	Type	Part Number		Pkg qty	Weight (1 pce) g
1	**End stops**	10 mm	0.394 in	Dark grey	BAZH1	1SNK900102R0000		20	24.00
2	**End sections**	0.8 mm	0.031 in	Dark grey	EK2.5-T3	1SNK705961R0000		20	4.76
3	**Jumper bars**	2 poles	32 A (IEC)	Orange	JB5-2	1SNK905302R0000		50	1.30
		3 poles	32 A (IEC)		JB5-3	1SNK905303R0000		50	2.00
		4 poles	32 A (IEC)		JB5-4	1SNK905304R0000		50	2.70
		5 poles	32 A (IEC)		JB5-5	1SNK905305R0000		50	3.50
		10 poles	32 A (IEC)		JB5-10	1SNK905310R0000		30	7.10
		50 poles	32 A (IEC)		JB5-50	1SNK905350R0000		10	36.00
4	**Test adapters**	For test plugs DIA 2 mm 0.079 in		Dark grey	TP2	1SNK900203R0000		20	1.70
		For test plugs DIA 4 mm 0.157 in			TP4	1SNK900205R0000		20	2.40
5	**Test connectors**	5.2 mm 0.205 in spacing		Dark grey	TC5	1SNK900200R0000		10	5.20
		End module, 5.2 mm 0.205 in			TC5-R1	1SNK900201R0000		10	5.20
6	**Label holders**			Dark grey	LH-J	1SNK900606R0000		100	0.73
7	**Terminal block markers**	Blank marker		White	MG-CPM 13 41790	1SNB041790R0512		1960	0.23
		Blank card			MC512	1SNK140000R0000		22	9.00
					MC512PA	1SNK149999R0000		20	10.00
		Universal wire markers holder		Grey	UMH	1SNK900611R0000		10	0.20

Complete list of accessories is indicated in the terminal block datasheet including end stops.
Some accessories such as jumper bars may modify the terminal block's ratings: Complete information available in the accessories section of the catalog.

Ground PI-Spring terminal blocks

Description	Color	Type	Part Number		Pkg qty	Weight (1 pce) g
Ground	Green-yellow	ZK2.5-T1-PE	1SNK705550R0000		25	21.53

1SNK162076S0201

Technical data valid for copper conductors only.

ZK2.5-L-L-PE PI-Spring terminal blocks

Triple deck with 2 feed-through circuits and 1 ground circuit - 5.2 mm 0.205 in spacing

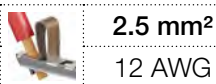

2.5 mm²
12 AWG

1SNK162112V0014

ZK2.5-L-L-PE

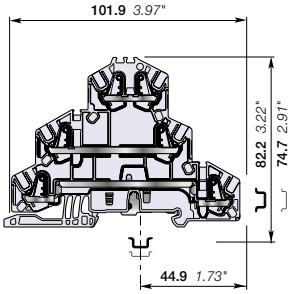

5.2 mm 0.205 in spacing

Description

Combine high performance with compact dimensions:
- 500V IEC 300 V UL,
- 2 feed through circuits and 1 ground circuit in just 5.2 mm 0.205 in spacing,
- 1 jumper channel and a large input and output marker zone on each deck,
- designed for easy wiring.

Ordering details

Description		Color	Type	Part Number		Pkg qty	Weight (1 pce) g
Feed-through + ground	2 feed-through circuits and 1 ground circuit	Grey, Green-yellow	ZK2.5-L-L-PE	1SNK705512R0000		25	21.38

Main technical data

Connecting capacity		IEC	UL - CSA
1 conductor per clamp	Rigid: Solid/Stranded	0.2 ... 4 mm²	26 ... 12 AWG
	Flexible without ferrule	0.22 ... 2.5 mm²	
	Flexible with non insulated ferrule	0.22 ... 2.5 mm²	26 ... 14 AWG
	Flexible with insulated ferrule	0.22 ... 2.5 mm²	26 ... 14 AWG
2 conductors per clamp	Flexible with twin ferrule	0.22 ... 0.5 mm²	26 ... 20 AWG
Rated current / Rated cross section		22 A / 2.5 mm²	20 A / 12 AWG
Rated short-time withstand current (1s)		300 A	396 A
Short Circuit Current Rating (with specific conditions)			
Rated voltage		500 V	300 V
Impulse withstand voltage		8000 V	
Protection		IP20	NEMA 1
Increased safety Ex e		440 V 20 A IEC/EN 60079-7 - IM2 II 2 GD Ex eb I/IIC/IIIC	

Mounting instructions

Rail		TH 35-7.5, TH 35-15
Wire stripping length		11 mm 0.433 in
Tool (for flexible conductor without ferrule)		Flat screwdriver Ø 3.5 mm Ø 0.138 in

The connecting capacity data for one Rigid: Solid/Stranded, or one Flexible conductor (when applicable) is a mandatory information required by IEC, UL and CSA standards (Copper conductors). All other data are provided as supplementary information only. For more details, please consult our CB, UL or CSA certificates and technical datasheet available on http://www.TE.com

CE, CB, RoHS, USR CNR, CSA, EAC, ATEX, IECEx, BV

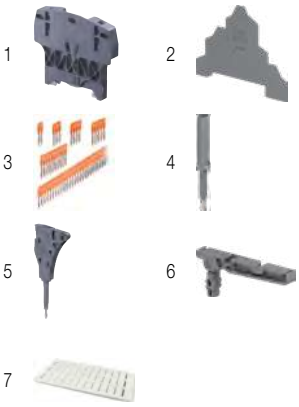

Accessories

	Description			Color	Type	Part Number		Pkg qty	Weight (1 pce) g
1	**End stops**	10 mm	0.394 in	Dark grey	BAZH1	1SNK900102R0000		20	24.00
2	**End sections**	0.8 mm	0.031 in	Dark grey	EK2.5-T3	1SNK705961R0000		20	4.76
3	**Jumper bars**	2 poles	32 A (IEC)	Orange	JB5-2	1SNK905302R0000		50	1.30
		3 poles	32 A (IEC)		JB5-3	1SNK905303R0000		50	2.00
		4 poles	32 A (IEC)		JB5-4	1SNK905304R0000		50	2.70
		5 poles	32 A (IEC)		JB5-5	1SNK905305R0000		50	3.50
		10 poles	32 A (IEC)		JB5-10	1SNK905310R0000		30	7.10
		50 poles	32 A (IEC)		JB5-50	1SNK905350R0000		10	36.00
4	**Test adapters**	For test plugs DIA 2 mm 0.079 in		Dark grey	TP2	1SNK900203R0000		20	1.70
		For test plugs DIA 4 mm 0.157 in			TP4	1SNK900205R0000		20	2.40
5	**Test connectors**	5.2 mm 0.205 in spacing		Dark grey	TC5	1SNK900200R0000		10	5.20
		End module, 5.2 mm 0.205 in			TC5-R1	1SNK900201R0000		10	5.20
6	**Label holders**			Dark grey	LH-J	1SNK900606R0000		100	0.73
7	**Terminal block markers**	Blank marker		White	MG-CPM 13 41790	1SNB041790R0512		1960	0.23
		Blank card			MC512	1SNK140000R0000		22	9.00
					MC512PA	1SNK149999R0000		20	10.00
		Universal wire markers holder		Grey	UMH	1SNK900611R0000		10	0.20

Complete list of accessories is indicated in the terminal block datasheet including end stops.
Some accessories such as jumper bars may modify the terminal block's ratings: Complete information available in the accessories section of the catalog.

Feed-through PI-Spring terminal blocks

Description	Color	Type	Part Number		Pkg qty	Weight (1 pce) g
Feed-through	Grey	ZK2.5-T3	1SNK705510R0000		25	17.33

1SNK162078S0201

Technical data valid for copper conductors only.

ZK2.5-L-N-PE PI-Spring terminal blocks

Triple deck with 2 feed-through circuits and 1 ground circuit - 5.2 mm 0.205 in spacing

2.5 mm²
12 AWG

1SNK162113V0014

ZK2.5-L-N-PE

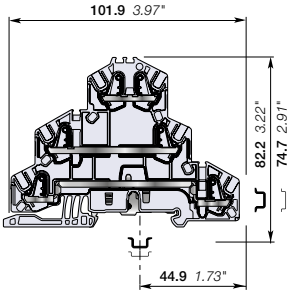

5.2 mm 0.205 in spacing

Description

Combine high performance with compact dimensions:
- 500 V IEC 300 V UL,
- 2 feed through circuits, phase and neutral, and 1 ground circuit in just 5.2 mm 0.205 in spacing,
- 1 jumper channel and a large input and output marker zone on each deck,
- designed for easy wiring.

Ordering details

Description		Color	Type	Part Number		Pkg qty	Weight (1 pce) g
Feed-through + ground	2 feed-through circuits and 1 ground circuit	Blue, grey, Green-yellow	ZK2.5-L-N-PE	1SNK705513R0000		25	21.38

Main technical data

Connecting capacity		IEC	UL - CSA
1 conductor per clamp	Rigid: Solid/Stranded	0.2 ... 4 mm²	26 ... 12 AWG
	Flexible without ferrule	0.22 ... 2.5 mm²	
	Flexible with non insulated ferrule	0.22 ... 2.5 mm²	26 ... 14 AWG
	Flexible with insulated ferrule	0.22 ... 2.5 mm²	26 ... 14 AWG
2 conductors per clamp	Flexible with twin ferrule	0.22 ... 0.5 mm²	26 ... 20 AWG
Rated current / Rated cross section		22 A / 2.5 mm²	20 A / 12 AWG
Rated short-time withstand current (1s)		300 A	396 A
Short Circuit Current Rating (with specific conditions)			
Rated voltage		500 V	300 V
Impulse withstand voltage		8000 V	
Protection		IP20	NEMA 1
Increased safety Ex e		440 V 20 A IEC/EN 60079-7 - IM2 II 2 GD Ex eb I/IIC/IIIC	

Mounting instructions

Rail		TH 35-7.5, TH 35-15
Wire stripping length		11 mm 0.433 in
Tool (for flexible conductor without ferrule)		Flat screwdriver Ø 3.5 mm Ø 0.138 in

The connecting capacity data for one Rigid: Solid/Stranded, or one Flexible conductor (when applicable) is a mandatory information required by IEC, UL and CSA standards (Copper conductors). All other data are provided as supplementary information only. For more details, please consult our CB, UL or CSA certificates and technical datasheet available on http://www.TE.com

CE, CB, RoHS, USR CNR, CSA, EAC, ATEX, IECEx, BV

Accessories

	Description			Color	Type	Part Number		Pkg qty	Weight (1 pce) g
1	**End stops**	10 mm	0.394 in	Dark grey	BAZH1	1SNK900102R0000		20	24.00
2	**End sections**	0.8 mm	0.031 in	Dark grey	EK2.5-T3	1SNK705961R0000		20	4.76
3	**Jumper bars**	2 poles	32 A (IEC)	Orange	JB5-2	1SNK905302R0000		50	1.30
		3 poles	32 A (IEC)		JB5-3	1SNK905303R0000		50	2.00
		4 poles	32 A (IEC)		JB5-4	1SNK905304R0000		50	2.70
		5 poles	32 A (IEC)		JB5-5	1SNK905305R0000		50	3.50
		10 poles	32 A (IEC)		JB5-10	1SNK905310R0000		30	7.10
		50 poles	32 A (IEC)		JB5-50	1SNK905350R0000		10	36.00
4	**Test adapters**	For test plugs DIA 2 mm 0.079 in		Dark grey	TP2	1SNK900203R0000		20	1.70
		For test plugs DIA 4 mm 0.157 in			TP4	1SNK900205R0000		20	2.40
5	**Test connectors**	5.2 mm 0.205 in spacing		Dark grey	TC5	1SNK900200R0000		10	5.20
		End module, 5.2 mm 0.205 in			TC5-R1	1SNK900201R0000		10	5.20
6	**Label holders**			Dark grey	LH-J	1SNK900606R0000		100	0.73
7	**Terminal block markers**	Blank marker		White	MG-CPM 13 41790	1SNB041790R0512		1960	0.23
		Blank card			MC512	1SNK140000R0000		22	9.00
					MC512PA	1SNK149999R0000		20	10.00
		Universal wire markers holder		Grey	UMH	1SNK900611R0000		10	0.20

Complete list of accessories is indicated in the terminal block datasheet including end stops.
Some accessories such as jumper bars may modify the terminal block's ratings: Complete information available in the accessories section of the catalog.

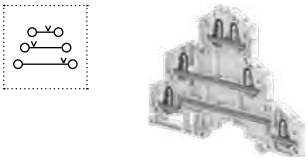

Feed-through PI-Spring terminal blocks

Description	Color	Type	Part Number		Pkg qty	Weight (1 pce) g
Feed-through	Grey	ZK2.5-T3	1SNK705510R0000		25	17.33

1SNK162079S0201

Technical data valid for copper conductors only.

ZK2.5-T1-PE PI-Spring terminal blocks

Triple deck with 1 ground circuit - 5.2 mm 0.205 in spacing

2.5 mm²
12 AWG

1SNK162111V0014

ZK2.5-T1-PE

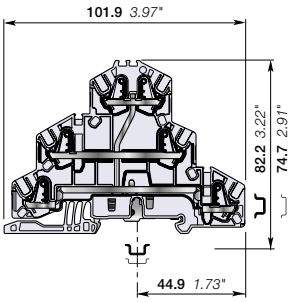

5.2 mm 0.205 in spacing

Description

Improve the safety of your installation in the event of a short-circuit thanks to our screwless rail contact:

- Rail contact non operator dependent,
- Performances above the requirements of the IEC 60947-7-2 terminal block standard,
- Secured snap on or off the rail,
- Profile aligned with ZK2.5-T3,
- 1 jumper channel on bottom and middle decks.

Ordering details

Description		Color	Type	Part Number		Pkg qty	Weight (1 pce) g
Ground	1 ground circuit	Green-yellow	ZK2.5-T1-PE	1SNK705550R0000		25	21.53

Main technical data

Connecting capacity		IEC	UL - CSA
1 conductor per clamp	Rigid: Solid/Stranded	0.2 ... 4 mm²	26 ... 12 AWG
	Flexible without ferrule	0.22 ... 2.5 mm²	
	Flexible with non insulated ferrule	0.22 ... 2.5 mm²	26 ... 14 AWG
	Flexible with insulated ferrule	0.22 ... 2.5 mm²	26 ... 14 AWG
Rated cross section		2.5 mm²	12 AWG
Rated short-time withstand current (1s)		300 A	396 A
Protection		IP20	NEMA 1
Explosive atmosphere classification		IM2 II 2 GD Ex eb I/IIC/IIIC	

Mounting instructions

Rail		TH 35-7.5, TH 35-15
Wire stripping length		11 mm 0.433 in
Tool (for flexible conductor without ferrule)		Flat screwdriver Ø 3.5 mm Ø 0.138 in

The connecting capacity data for one Rigid: Solid/Stranded, or one Flexible conductor (when applicable) is a mandatory information required by IEC, UL and CSA standards (Copper conductors). All other data are provided as supplementary information only. For more details, please consult our CB, UL or CSA certificates and technical datasheet available on http://www.TE.com

CE, CB, RoHS, USR CNR, CSA, EAC, ATEX, IECEx, BV

Accessories

	Description			Color	Type	Part Number		Pkg qty	Weight (1 pce) g
1	End stops	10 mm	0.394 in	Dark grey	BAZH1	1SNK900102R0000		20	24.00
2	End sections	0.8 mm	0.031 in	Dark grey	EK2.5-T3	1SNK705961R0000		20	4.76
3	Test adapters	For test plugs DIA 2 mm 0.079 in		Dark grey	TP2	1SNK900203R0000		20	1.70
		For test plugs DIA 4 mm 0.157 in			TP4	1SNK900205R0000		20	2.40
4	Test connectors	5.2 mm 0.205 in spacing		Dark grey	TC5	1SNK900200R0000		10	5.20
		End module, 5.2 mm 0.205 in			TC5-R1	1SNK900201R0000		10	5.20
5	Label holders			Dark grey	LH-J	1SNK900606R0000		100	0.73
6	Terminal block markers	Blank marker		White	MG-CPM 13 41790	1SNB041790R0512		1960	0.23
		Blank card			MC512	1SNK140000R0000		22	9.00
					MC512PA	1SNK149999R0000		20	10.00
		Universal wire markers holder		Grey	UMH	1SNK900611R0000		10	0.20

Complete list of accessories is indicated in the terminal block datasheet including end stops.
Some accessories such as jumper bars may modify the terminal block's ratings: Complete information available in the accessories section of the catalog.

1SNK162077S0201

Technical data valid for copper conductors only.

ZK2.5-CH-4P-LR PI-Spring terminal blocks
Component holder - 5.2 mm 0.205 in spacing

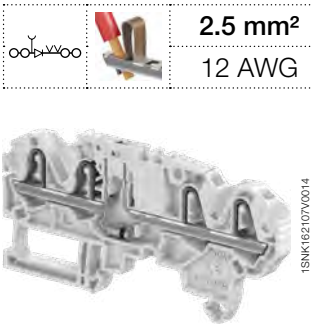

ZK2.5-CH-4P

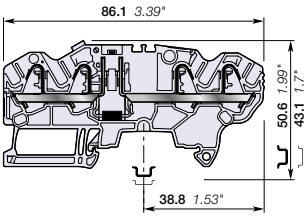

5.2 mm 0.205 in spacing

		2.5 mm²
		12 AWG

Description

- Protect your circuit with one 1N4007 diode,
- Clear identification of the diode orientation with marking identification on the top of the terminal block

Ordering details

Description		Color	Type	Part Number		Pkg qty	Weight (1 pce) g
Component holder	with 1 test socket DIA 2 mm 0.079 in	Grey	ZK2.5-CH-4P-LR	1SNK705710R0000		50	10.91

Main technical data

Connecting capacity		IEC	UL - CSA
1 conductor per clamp	Rigid: Solid/Stranded	0.2 ... 4 mm²	26 ... 12 AWG
	Flexible without ferrule	0.22 ... 2.5 mm²	
	Flexible with non insulated ferrule	0.22 ... 2.5 mm²	26 ... 14 AWG
	Flexible with insulated ferrule	0.22 ... 2.5 mm²	26 ... 14 AWG
2 conductors per clamp	Flexible with twin ferrule	0.22 ... 0.5 mm²	26 ... 20 AWG
Rated current / Rated cross section		1 A / 2.5 mm²	1 A / 12 AWG
Rated short-time withstand current (1s)			
Short Circuit Current Rating (with specific conditions)			
Rated voltage		630 V	300 V
Impulse withstand voltage			
Protection		IP20	NEMA 1

Mounting instructions

Rail		TH 35-7.5, TH 35-15
Wire stripping length		11 mm 0.433 in
Tool (for flexible conductor without ferrule)		Flat screwdriver Ø 3.5 mm Ø 0.138 in

The connecting capacity data for one Rigid: Solid/Stranded, or one Flexible conductor (when applicable) is a mandatory information required by IEC, UL and CSA standards (Copper conductors). All other data are provided as supplementary information only. For more details, please consult our CB, UL or CSA certificates and technical datasheet available on http://www.TE.com

CE | CB | RoHS | USR CNR | CSA | EAC | BV

Accessories

	Description			Color	Type	Part Number		Pkg qty	Weight (1 pce) g
1	**End stops**	5.2 mm	0.205 in	Dark grey	BAZ1	1SNK900002R0000		50	5.30
2	**End sections**	2 mm	0.158 in	Dark grey	EK2.5-S-4P	1SNK705913R0000		20	2.94
3	**Jumper bars**	2 poles	32 A (IEC)	Orange	JB5-2	1SNK905302R0000		50	1.30
		3 poles	32 A (IEC)		JB5-3	1SNK905303R0000		50	2.00
		4 poles	32 A (IEC)		JB5-4	1SNK905304R0000		50	2.70
		5 poles	32 A (IEC)		JB5-5	1SNK905305R0000		50	3.50
		10 poles	32 A (IEC)		JB5-10	1SNK905310R0000		30	7.10
		50 poles	32 A (IEC)		JB5-50	1SNK905350R0000		10	36.00
4	**Circuit separators**	3 mm	0.118 in	Dark grey	CS-R3	1SNK900107R0000		20	6.40
5	**Test adapters**	For test plugs DIA 2 mm 0.079 in		Dark grey	TP2	1SNK900203R0000		20	1.70
		For test plugs DIA 4 mm 0.157 in			TP4	1SNK900205R0000		20	2.40
6	**Test connectors**	5.2 mm 0.205 in spacing		Dark grey	TC5	1SNK900200R0000		10	5.20
		End module, 5.2 mm 0.205 in			TC5-R1	1SNK900201R0000		10	5.20
7	**Terminal block markers**	Blank marker		White	MG-CPM 13 41790	1SNB041790R0512		1960	0.23
		Blank card			MC512	1SNK140000R0000		22	9.00
					MC512PA	1SNK149999R0000		20	10.00
		Universal wire markers holder		Grey	UMH	1SNK900611R0000		10	0.20

Complete list of accessories is indicated in the terminal block datasheet including end stops.
Some accessories such as jumper bars may modify the terminal block's ratings: Complete information available in the accessories section of the catalog.

1SNK162071S0201

Technical data valid for copper conductors only.

ZK2.5-CH-4P-RL PI-Spring terminal blocks
Component holder - 5.2 mm 0.205 in spacing

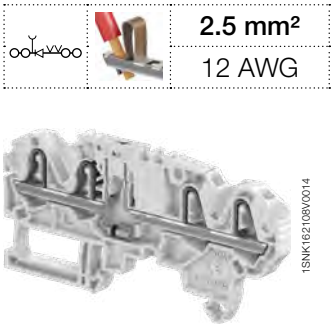

2.5 mm²
12 AWG

ZK2.5-CH-4P

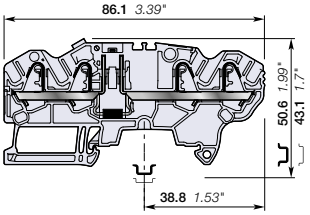

5.2 mm 0.205 in spacing

Description

- Protect your circuit with one 1N4007 diode,
- Clear identification of the diode orientation with marking identification on the top of the terminal block

Ordering details

Description		Color	Type	Part Number		Pkg qty	Weight (1 pce) g
Component holder	with 1 test socket DIA 2 mm 0.079 in	Grey	ZK2.5-CH-4P-RL	1SNK705711R0000		50	10.91

Main technical data

Connecting capacity		IEC	UL - CSA
1 conductor per clamp	Rigid: Solid/Stranded	0.2 ... 4 mm²	26 ... 12 AWG
	Flexible without ferrule	0.22 ... 2.5 mm²	
	Flexible with non insulated ferrule	0.22 ... 2.5 mm²	26 ... 14 AWG
	Flexible with insulated ferrule	0.22 ... 2.5 mm²	26 ... 14 AWG
2 conductors per clamp	Flexible with twin ferrule	0.22 ... 0.5 mm²	26 ... 20 AWG
Rated current / Rated cross section		1 A / 2.5 mm²	1 A / 12 AWG
Rated short-time withstand current (1s)			
Short Circuit Current Rating (with specific conditions)			
Rated voltage		630 V	300 V
Impulse withstand voltage			
Protection		IP20	NEMA 1

Mounting instructions

Rail		TH 35-7.5, TH 35-15
Wire stripping length		11 mm 0.433 in
Tool (for flexible conductor without ferrule)		Flat screwdriver Ø 3.5 mm Ø 0.138 in

The connecting capacity data for one Rigid: Solid/Stranded, or one Flexible conductor (when applicable) is a mandatory information required by IEC, UL and CSA standards (Copper conductors). All other data are provided as supplementary information only. For more details, please consult our CB, UL or CSA certificates and technical datasheet available on http://www.TE.com

CE | CB | RoHS | USR CNR | CSA | EAC | BV

Accessories

	Description			Color	Type	Part Number		Pkg qty	Weight (1 pce) g
1	**End stops**	5.2 mm	0.205 in	Dark grey	BAZ1	1SNK900002R0000		50	5.30
2	**End sections**	2 mm	0.158 in	Dark grey	EK2.5-S-4P	1SNK705913R0000		20	2.94
3	**Jumper bars**	2 poles	32 A (IEC)	Orange	JB5-2	1SNK905302R0000		50	1.30
		3 poles	32 A (IEC)		JB5-3	1SNK905303R0000		50	2.00
		4 poles	32 A (IEC)		JB5-4	1SNK905304R0000		50	2.70
		5 poles	32 A (IEC)		JB5-5	1SNK905305R0000		50	3.50
		10 poles	32 A (IEC)		JB5-10	1SNK905310R0000		30	7.10
		50 poles	32 A (IEC)		JB5-50	1SNK905350R0000		10	36.00
4	**Circuit separators**	3 mm	0.118 in	Dark grey	CS-R3	1SNK900107R0000		20	6.40
5	**Test adapters**	For test plugs DIA 2 mm 0.079 in		Dark grey	TP2	1SNK900203R0000		20	1.70
		For test plugs DIA 4 mm 0.157 in			TP4	1SNK900205R0000		20	2.40
6	**Test connectors**	5.2 mm 0.205 in spacing		Dark grey	TC5	1SNK900200R0000		10	5.20
		End module, 5.2 mm 0.205 in			TC5-R1	1SNK900201R0000		10	5.20
7	**Terminal block markers**	Blank marker		White	MG-CPM 13 41790	1SNB041790R0512		1960	0.23
		Blank card			MC512	1SNK140000R0000		22	9.00
					MC512PA	1SNK149999R0000		20	10.00
		Universal wire markers holder		Grey	UMH	1SNK900611R0000		10	0.20

Complete list of accessories is indicated in the terminal block datasheet including end stops.
Some accessories such as jumper bars may modify the terminal block's ratings: Complete information available in the accessories section of the catalog.

1SNK162072S0201

Technical data valid for copper conductors only.

ZK2.5-D-CH-UD PI-Spring terminal blocks
Component holder - 5.2 mm 0.205 in spacing

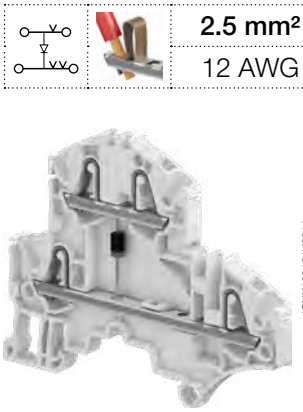

ZK2.5-D-CH

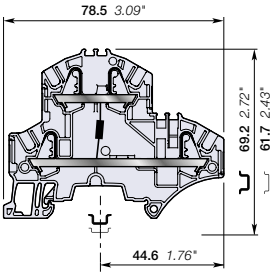

5.2 mm 0.205 in spacing

		2.5 mm²
		12 AWG

Description

Protect your circuit with one 1N4007 diode.

Ordering details

Description	Color	Type	Part Number		Pkg qty	Weight (1 pce) g
Component holder	Grey	ZK2.5-D-CH-UD	1SNK705213R0000		50	11.20

Main technical data

Connecting capacity		IEC	UL - CSA
1 conductor per clamp	Rigid: Solid/Stranded	0.2 ... 4 mm²	26 ... 12 AWG
	Flexible without ferrule	0.22 ... 2.5 mm²	
	Flexible with non insulated ferrule	0.22 ... 2.5 mm²	26 ... 14 AWG
	Flexible with insulated ferrule	0.22 ... 2.5 mm²	26 ... 14 AWG
2 conductors per clamp	Flexible with twin ferrule	0.22 ... 0.5 mm²	26 ... 20 AWG
Rated current / Rated cross section		24 A / 2.5 mm²	20 A / 12 AWG
Rated short-time withstand current (1s)		300 A	
Short Circuit Current Rating (with specific conditions)			
Rated voltage		800 V	600 V
Impulse withstand voltage			
Protection		IP20	NEMA 1

Mounting instructions

Rail		TH 35-7.5, TH 35-15
Wire stripping length		11 mm 0.443 in
Tool (for flexible conductor without ferrule)		Flat screwdriver Ø 3.5 mm Ø 0.138 in

The connecting capacity data for one Rigid: Solid/Stranded, or one Flexible conductor (when applicable) is a mandatory information required by IEC, UL and CSA standards (Copper conductors). All other data are provided as supplementary information only. For more details, please consult our CB, UL or CSA certificates and technical datasheet available on http://www.TE.com

CE | RoHS | USR CNR | CSA | EAC

Accessories

	Description			Color	Type	Part Number		Pkg qty	Weight (1 pce) g
1	End stops	10 mm	0.394 in	Dark grey	BAZH1	1SNK900102R0000		20	24.00
2	End sections	2 mm	0.079 in	Dark grey	EK2.5-D2	1SNK705960R0000		20	3.40
3	Jumper bars	2 poles	32 A (IEC)	Orange	JB5-2	1SNK905302R0000		50	1.30
		3 poles	32 A (IEC)		JB5-3	1SNK905303R0000		50	2.00
		4 poles	32 A (IEC)		JB5-4	1SNK905304R0000		50	2.70
		5 poles	32 A (IEC)		JB5-5	1SNK905305R0000		50	3.50
		10 poles	32 A (IEC)		JB5-10	1SNK905310R0000		30	7.10
		50 poles	32 A (IEC)		JB5-50	1SNK905350R0000		10	36.00
4	Test adapters	For test plugs DIA 2 mm 0.079 in		Dark grey	TP2	1SNK900203R0000		20	1.70
		For test plugs DIA 4 mm 0.157 in			TP4	1SNK900205R0000		20	2.40
5	Test connectors	5.2 mm 0.205 in spacing		Dark grey	TC5	1SNK900200R0000		10	5.20
		End module, 5.2 mm 0.205 in			TC5-R1	1SNK900201R0000		10	5.20
6	Shield connectors				SHB	1SNK900602R0000		20	4.90
7	Label holders			Dark grey	LH-J	1SNK900606R0000		100	0.73
8	Terminal block markers	Blank marker		White	MG-CPM 13 41790	1SNB041790R0512		1960	0.23
		Blank card			MC512	1SNK140000R0000		22	9.00
					MC512PA	1SNK149999R0000		20	10.00
		Universal wire markers holder		Grey	UMH	1SNK900611R0000		10	0.20

Complete list of accessories is indicated in the terminal block datasheet including end stops.
Some accessories such as jumper bars may modify the terminal block's ratings: Complete information available in the accessories section of the catalog.

1SNK162066S0201

Technical data valid for copper conductors only.

ZK2.5-D-CH-DU PI-Spring terminal blocks
Component holder - 5.2 mm 0.205 in spacing

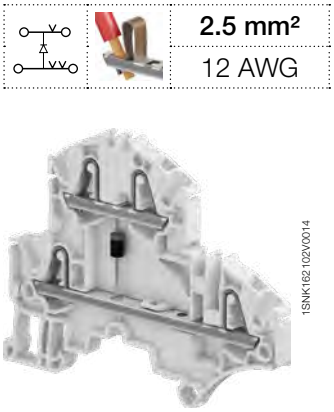

2.5 mm²	
12 AWG	

1SNK162102V0014

ZK2.5-D-CH

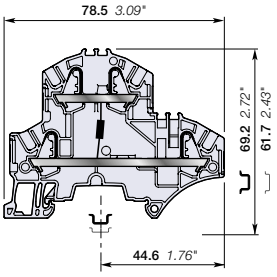

5.2 mm 0.205 in spacing

Description

Protect your circuit with one 1N4007 diode.

Ordering details

Description	Color	Type	Part Number		Pkg qty	Weight (1 pce) g
Component holder	Grey	ZK2.5-D-CH-DU	1SNK705214R0000		50	11.20

Main technical data

Connecting capacity		IEC	UL - CSA
1 conductor per clamp	Rigid: Solid/Stranded	0.2 ... 4 mm²	26 ... 12 AWG
	Flexible without ferrule	0.22 ... 2.5 mm²	
	Flexible with non insulated ferrule	0.22 ... 2.5 mm²	26 ... 14 AWG
	Flexible with insulated ferrule	0.22 ... 2.5 mm²	26 ... 14 AWG
2 conductors per clamp	Flexible with twin ferrule	0.22 ... 0.5 mm²	26 ... 20 AWG
Rated current / Rated cross section		24 A / 2.5 mm²	20 A / 12 AWG
Rated short-time withstand current (1s)		300 A	
Short Circuit Current Rating (with specific conditions)			
Rated voltage		800 V	600 V
Impulse withstand voltage			
Protection		IP20	NEMA 1

The connecting capacity data for one Rigid: Solid/Stranded, or one Flexible conductor (when applicable) is a mandatory information required by IEC, UL and CSA standards (Copper conductors). All other data are provided as supplementary information only. For more details, please consult our CB, UL or CSA certificates and technical datasheet available on http://www.TE.com

CE RoHS USR CNR CSA EAC

Mounting instructions

Rail	TH 35-7.5, TH 35-15
Wire stripping length	11 mm 0.443 in
Tool (for flexible conductor without ferrule)	Flat screwdriver Ø 3.5 mm Ø 0.138 in

Accessories

	Description			Color	Type	Part Number		Pkg qty	Weight (1 pce) g
1	End stops	10 mm	0.394 in	Dark grey	BAZH1	1SNK900102R0000		20	24.00
2	End sections	2 mm	0.079 in	Dark grey	EK2.5-D2	1SNK705960R0000		20	3.40
3	Jumper bars	2 poles	32 A (IEC)	Orange	JB5-2	1SNK905302R0000		50	1.30
		3 poles	32 A (IEC)		JB5-3	1SNK905303R0000		50	2.00
		4 poles	32 A (IEC)		JB5-4	1SNK905304R0000		50	2.70
		5 poles	32 A (IEC)		JB5-5	1SNK905305R0000		50	3.50
		10 poles	32 A (IEC)		JB5-10	1SNK905310R0000		30	7.10
		50 poles	32 A (IEC)		JB5-50	1SNK905350R0000		10	36.00
4	Test adapters	For test plugs DIA 2 mm 0.079 in		Dark grey	TP2	1SNK900203R0000		20	1.70
		For test plugs DIA 4 mm 0.157 in			TP4	1SNK900205R0000		20	2.40
5	Test connectors	5.2 mm 0.205 in spacing		Dark grey	TC5	1SNK900200R0000		10	5.20
		End module, 5.2 mm 0.205 in			TC5-R1	1SNK900201R0000		10	5.20
6	Shield connectors				SHB	1SNK900602R0000		20	4.90
7	Label holders			Dark grey	LH-J	1SNK900606R0000		100	0.73
8	Terminal block markers	Blank marker		White	MG-CPM 13 41790	1SNB041790R0512		1960	0.23
		Blank card			MC512	1SNK140000R0000		22	9.00
					MC512PA	1SNK149999R0000		20	10.00
		Universal wire markers holder		Grey	UMH	1SNK900611R0000		10	0.20

Complete list of accessories is indicated in the terminal block datasheet including end stops.
Some accessories such as jumper bars may modify the terminal block's ratings: Complete information available in the accessories section of the catalog.

1SNK162067S0201

Technical data valid for copper conductors only.

ZK2.5-D-CH2-DU-RL PI-Spring terminal blocks

Component holder - 5.2 mm 0.205 in spacing

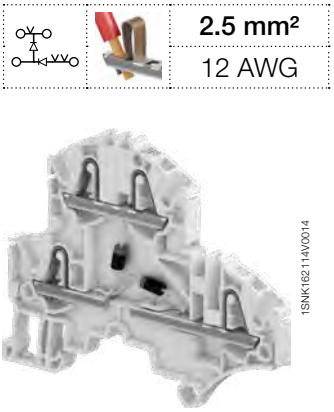

2.5 mm²	
12 AWG	

1SNK162114V0014

ZK2.5-D-CH2

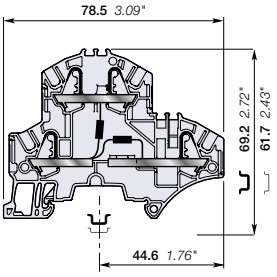

5.2 mm 0.205 in spacing

Description

- Protect your circuit with 1N4007 diodes;
- Convenient identification of the diodes orientation on the terminal block front side.

Ordering details

Description	Color	Type	Part Number		Pkg qty	Weight (1 pce) g
Component holder	Grey	ZK2.5-D-CH2-DU-RL	1SNK705219R0000		50	11.20

Main technical data

Connecting capacity		IEC	UL - CSA
1 conductor per clamp	Rigid: Solid/Stranded	0.2 ... 4 mm²	26 ... 12 AWG
	Flexible without ferrule	0.22 ... 2.5 mm²	
	Flexible with non insulated ferrule	0.22 ... 2.5 mm²	26 ... 14 AWG
	Flexible with insulated ferrule	0.22 ... 2.5 mm²	26 ... 14 AWG
2 conductors per clamp	Flexible with twin ferrule	0.22 ... 0.5 mm²	26 ... 20 AWG
Rated current / Rated cross section		1 A / 2.5 mm²	/ 12 AWG
Rated short-time withstand current (1s)			
Short Circuit Current Rating (with specific conditions)			
Rated voltage		800 V	600 V
Impulse withstand voltage			
Protection		IP20	NEMA 1

Mounting instructions

Rail		TH 35-7.5, TH 35-15
Wire stripping length		11 mm 0.443 in
Tool (for flexible conductor without ferrule)		Flat screwdriver Ø 3.5 mm Ø 0.138 in

The connecting capacity data for one Rigid: Solid/Stranded, or one Flexible conductor (when applicable) is a mandatory information required by IEC, UL and CSA standards (Copper conductors). All other data are provided as supplementary information only. For more details, please consult our CB, UL or CSA certificates and technical datasheet available on http://www.TE.com

CE RoHS EAC

Accessories

	Description			Color	Type	Part Number		Pkg qty	Weight (1 pce) g
1	End stops	10 mm	0.394 in	Dark grey	BAZH1	1SNK900102R0000		20	24.00
2	End sections	2 mm	0.079 in	Dark grey	EK2.5-D2	1SNK705960R0000		20	3.40
3	Jumper bars	2 poles	32 A (IEC)	Orange	JB5-2	1SNK905302R0000		50	1.30
		3 poles	32 A (IEC)		JB5-3	1SNK905303R0000		50	2.00
		4 poles	32 A (IEC)		JB5-4	1SNK905304R0000		50	2.70
		5 poles	32 A (IEC)		JB5-5	1SNK905305R0000		50	3.50
		10 poles	32 A (IEC)		JB5-10	1SNK905310R0000		30	7.10
		50 poles	32 A (IEC)		JB5-50	1SNK905350R0000		10	36.00
4	Test adapters	For test plugs DIA 2 mm 0.079 in		Dark grey	TP2	1SNK900203R0000		20	1.70
		For test plugs DIA 4 mm 0.157 in			TP4	1SNK900205R0000		20	2.40
5	Test connectors	5.2 mm 0.205 in spacing		Dark grey	TC5	1SNK900200R0000		10	5.20
		End module, 5.2 mm 0.205 in			TC5-R1	1SNK900201R0000		10	5.20
6	Shield connectors				SHB	1SNK900602R0000		20	4.90
7	Terminal block markers	Blank marker		White	MG-CPM 13 41790	1SNB041790R0512		1960	0.23
		Blank card			MC512	1SNK140000R0000		22	9.00
					MC512PA	1SNK149999R0000		20	10.00
		Universal wire markers holder		Grey	UMH	1SNK900611R0000		10	0.20

Complete list of accessories is indicated in the terminal block datasheet including end stops.
Some accessories such as jumper bars may modify the terminal block's ratings: Complete information available in the accessories section of the catalog.

1SNK162073S0201

Technical data valid for copper conductors only.

SNK series, terminal blocks
Screw clamp technology

Technologies presentation			72
Overview			76

Feed-through

4 mm² / 12 AWG	**ZS4**		80
6 mm² / 10 AWG	**ZS6**		81
	ZS6-3S and **ZS6-4S**	with 3 and 4 connections	82-83
10 mm² / 6 AWG	**ZS10**		84
16 mm² / 4 AWG	**ZS16**		85
25 mm² / 3 AWG	**ZS25**		86
35 mm² / 0 AWG	**ZS35**		87
50 mm² / 0 AWG	**ZS50**		88
70 mm² / 00 AWG	**ZS70**		89
95 mm² / 0000 AWG	**ZS95**		90
150 mm² / 350 Kcmil	**ZS150**		91
240 mm² / 240 Kcmil	**ZS240**		92

Ground

4 mm² / 12 AWG	**ZS4-PE**		93
6 mm² / 10 AWG	**ZS6-PE**		94
	ZS6-3S-PE and **ZS6-4S-PE**	with 3 and 4 connections	95-96
10 mm² / 6 AWG	**ZS10-PE**		97
16 mm² / 4 AWG	**ZS16-PE**		98
25 mm² / 3 AWG	**ZS25-PE**		99
35 mm² / 2 AWG	**ZS35-PE**		100
35 mm²	**ZS35-PEN**	+ neutral	101
50 mm² / 0 AWG	**ZS50-PE**		102
70 mm² / 00 AWG	**ZS70-PE**		103
95 mm² / 0000 AWG	**ZS95-PE**		104

Disconnect with blade

4 mm² / 10 AWG	**ZS4-S**, **ZS4-S-T**, **ZS4-S-R1** and **ZS4-S-T-R1**	with test	105-108
6 mm² / 10 AWG	**ZS6-S** and **ZS6-S-4S-T**	with test	109-110
10 mm² / 6 AWG	**ZS10-S**		111

Disconnect with plug

4 mm² / 10 AWG	**ZS4-SP**, **ZS4-SP-T2**, **ZS4-SP-R1** and **ZS4-SP-T2-R1**	with test	112-115
10 mm² / 6 AWG	**ZS10-SP**		116

Fuse and marshalling cabinets application overview			118

For 5x20 and 5x25 mm fuses

4 mm² / 10 AWG	**ZS4-SF1** and **ZS4-SF1-T**	with test	120-121
	ZS4-SF1-R	with fuse indicator and test	122-123
	ZS4-R1	feed-through	124
	ZS4-S-R3	disconnect with lever	125

For 5x20 mm fuses and marshalling cabinets application

4 mm² / 10 AWG	**ZS4-SF**		126
	ZS4-SF-T	with test	127
	ZS4-SF-R	with fuse indicator and test	128-129
	ZS4-R2	feed-through	130
	ZS4-PE-R2	ground	131
	ZS4-S-R2	disconnect with lever	132

For 6.3x32 mm fuses (¼ x 1¼ in)

10 mm² / 6 AWG	**ZS10-SF**		133
	ZS10-SF-R	with fuse indicator	134
	ZS10-S-R2	disconnect with lever	135

Double deck

4 mm² / 12 AWG	**ZS4-D2** and **ZS4-D1**	2 and 1 feed-through circuits	136-137
6 mm² / 10 AWG	**ZS6-D2** and **ZS6-D1**	2 and 1 feed-through circuits	138-139
	ZS6-D2-PE	1 feed-through circuit and 1 ground circuit	140
	ZS6-D1-PE	1 ground circuit	141
4 mm² / 10 AWG	**ZS4-D2-S**	1 disconnect circuit and 1 feed-through circuit	142
	ZS4-D2-S-T	1 disconnect circuit + test and 1 feed-through circuit	143
	ZS4-D2-SF1	1 fuse circuit and 1 feed-through circuit	144
	ZS4-D2-SF1-R	1 fuse circuit + fuse indicator and 1 feed-through circuit	145

Triple deck

4 mm² / 12 AWG	**ZS4-T3**	3 feed-through circuits	146
4 mm² / 10 AWG	**ZS4-T3-R1**	3 feed-through circuits	147

Component holder

4 mm² / 12 AWG	**ZS4-D-CH-UD** and **ZS4-D-CH-DU**		148-149

Test and measurement

Overview			150
10 mm² / 6 AWG	**ZS10-ST**		154
	ZS10-ST-1	for Potential Transformer circuits	155
	ZS10-ST-T4	for Current Transformer circuits	156
	ZS10-R1	feed-through	157
	ZS10-PE-R1	ground	158

TE Connectivity screw clamp technology benefits from 60 years of experience.

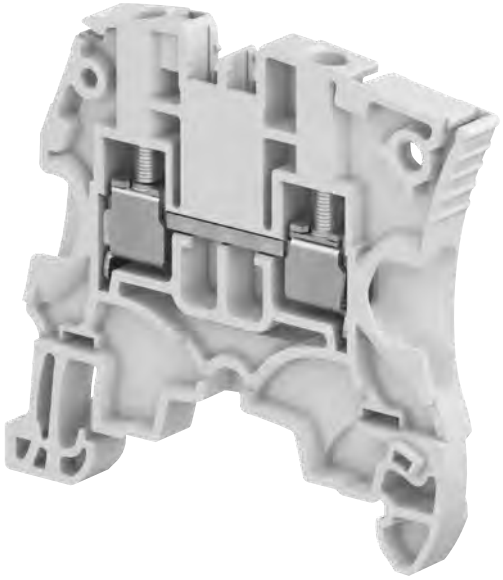

Speed up your projects

An optimized conductor guiding

Smooth connection process up to 2 conductors with or without ferrules thanks to funnel entry shape.
Also perfectly adapted to double ferrule shape 1
Security: flap avoiding the insertion of cable underneath the clamp 2.

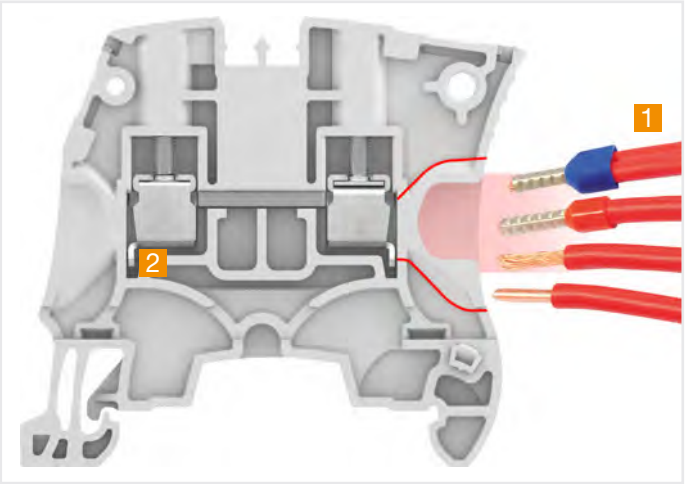

Engineered conductor entry

Better project identification

- Circuit identification is improved thanks to the 20% larger marking area
- Pre-mark by hand or with label on our flat marking surface and start immediately the wiring, before the final markers mounting
- Spare markers re-printing in case of modifications.

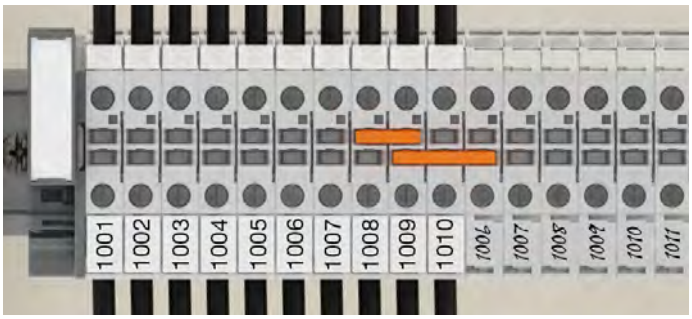

Clear circuit identification

1SNK161092S0201

Easy to install

Smart design facilitating assembly process.
Mounting, wiring, testing… made easy.

Avoid mounting and wiring errors: asymmetrical design allows immediate visual check in case of reversed terminal blocks.

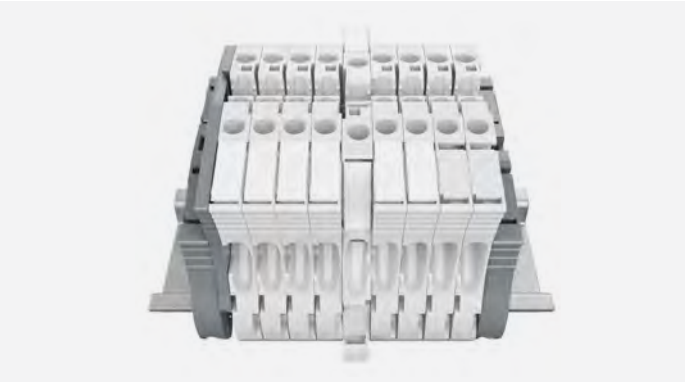

Asymmetrical design avoids mounting error

Minimize retightening campaigns
High torque resistance : the clamp is punched to increase the number of threads in contact by 30 % 1.
The TE Connectivity exclusive anti-release system creates a controlled locking-screw effect reinforced by the 2 overlapping tabs that maintain the clamp parts 2.

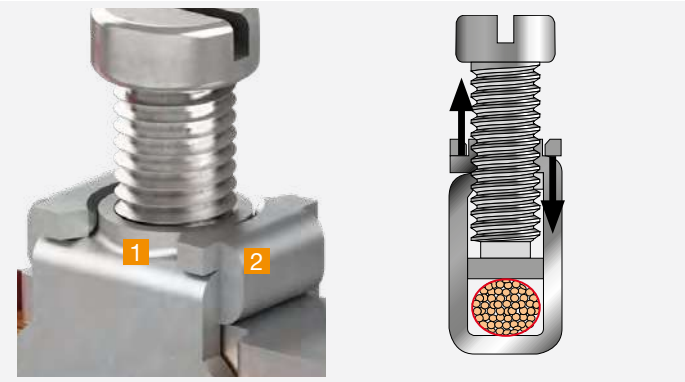

High torque resistance

Anti-release system

Faster accessories mounting
Save up to 70% mounting time thanks to screwless accessories: jumpers, component plugs, test devices, end stops and snap-in ground terminal blocks.

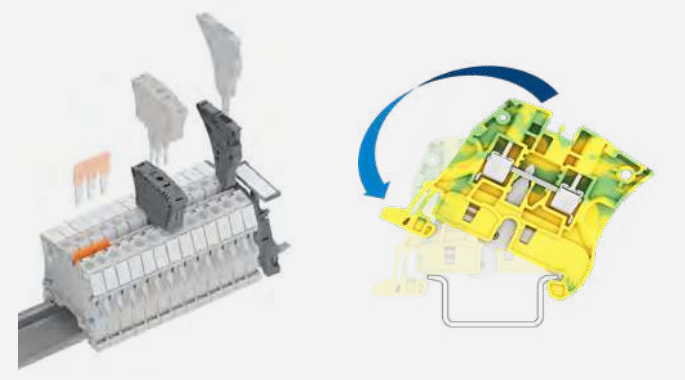

Screwless accessories

Snap-in ground terminal block for rapid installation

1SNK161092S0201

Easy to install

Smart design facilitating assembly process.
Mounting, wiring, testing… made easy.

Locking pin 1 allows quick and easy lock up to ten blocks in position at a time.

Closed jumper location allows great stiffness of the terminal block, optimal jumper guiding and avoids deflections while tightening.

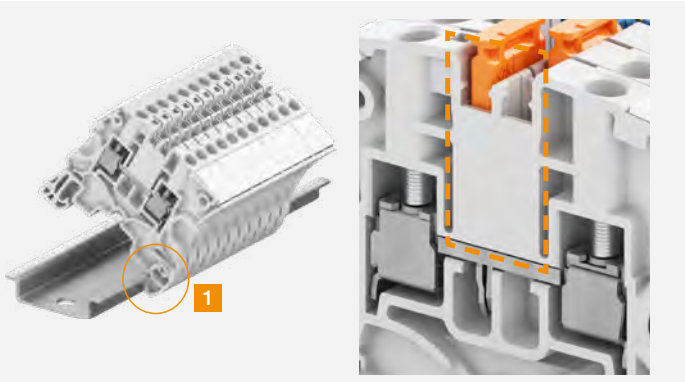

Lock up to ten blocks in position at a time

Closed jumper location for stiffness

Smart accessories
Flexible test solutions from individual insulated test adapter to test connectors for complete assemblies testing.
- Direct plug-in into jumpers channels
- 5, 6, 8 mm spacing, mixing various spacing is possible
- 1000 V rating.

Component holder plugs for series or parallel component mounting (resistors, filters, diodes..).
Can be installed after wiring.
Series plug offers screwless component connection (no soldering).

Plug-in individual test adapter

Plug-in test connector

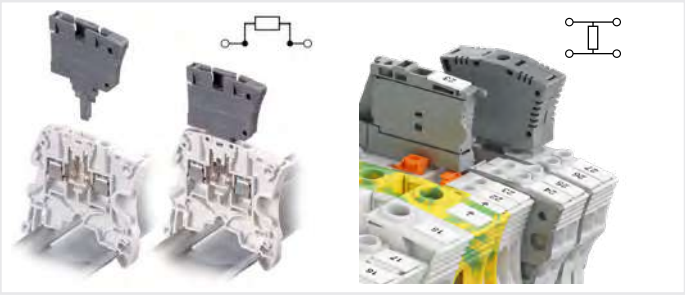

Series plug associated with disconnect blocks

Parallel plug to be installed between 2 blocks

Smart plug-in jumpers:
Pre-cut poles removable by hand: clean cut.
Insulated up to 1000 V (avoid use of separators).
Predefined shapes in molding to easily identify connected poles with a pen.

Pre-cut poles easy removable by hand

Predefined shape to identify connected poles

1SNK161092S0201

Optimized logistics

Reduce your accessories inventory by up to 50%

SNK PI-Spring, screw and pluggable ranges share the same accessories.
Reduced packaging adapted to the usage
(20 items packaging for some references).

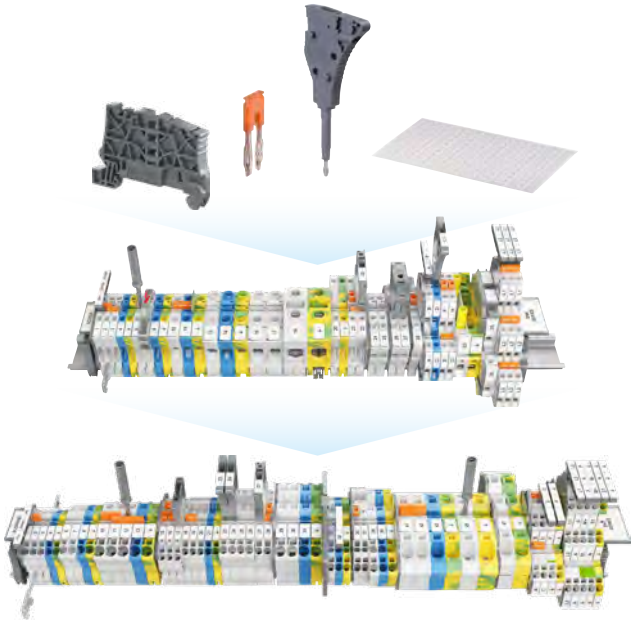

Shared accessories for SNK PI-Spring, screw and pluggable ranges

All end sections and circuit separators fit several types and sizes of blocks.

Stock only one end section for managing your assembly up to 240 mm²

Facilitate maintenance operations

Terminals can be individually removed from a terminal assembly equipped with markers:
TE Connectivity markers become independent after strip mounting, TE Connectivity markers remain on terminal in any situation.

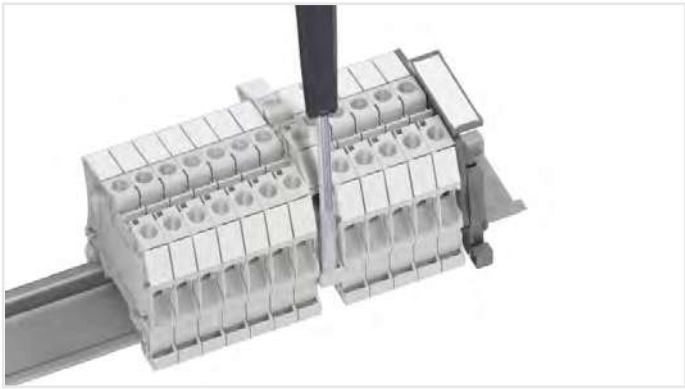

Maintenance operations facilitated

Reliable in harsh conditions

Qualified for worldwide markets, applications and for severe environments: vibration, shock, corrosion…

1SNK161092S0201

2 Connections

Single deck
Feed-through
Ground
Disconnect
Fuse

3 Connections

Single deck
Feed-through
Ground

4 Connections

Single deck
Feed-through
Ground
Disconnect

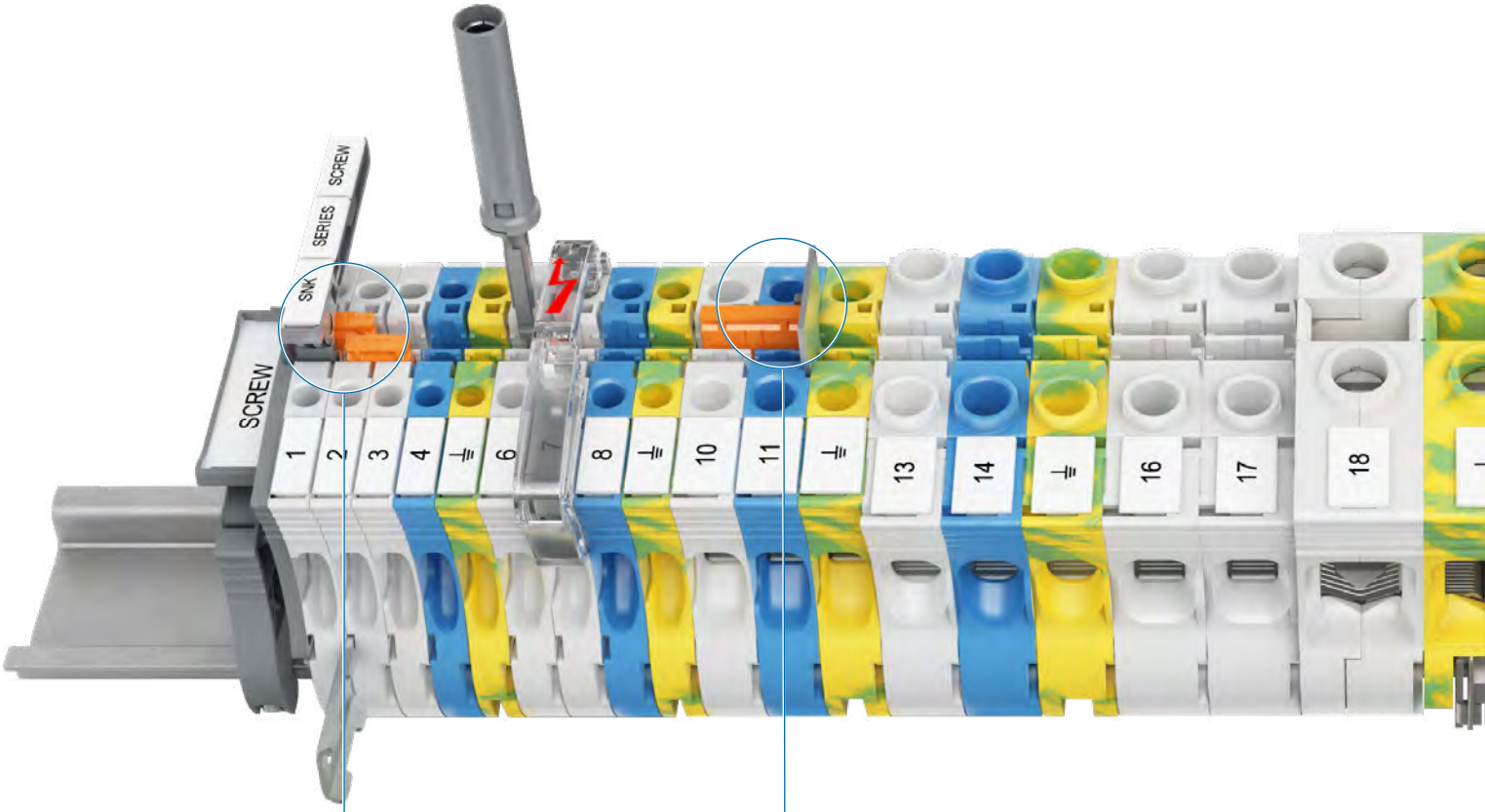

Double central channels
allows multiconfigurations (jumpering, testing and measuring)

Circuit separator
without spacing loss

2x2 Connections

Double deck
Feed-through
Ground
Disconnect
Fuse
Component holder

2 Connections

Test and measurement
Feed-through
Ground
Disconnect

3x2 Connections

Triple deck
Feed-through

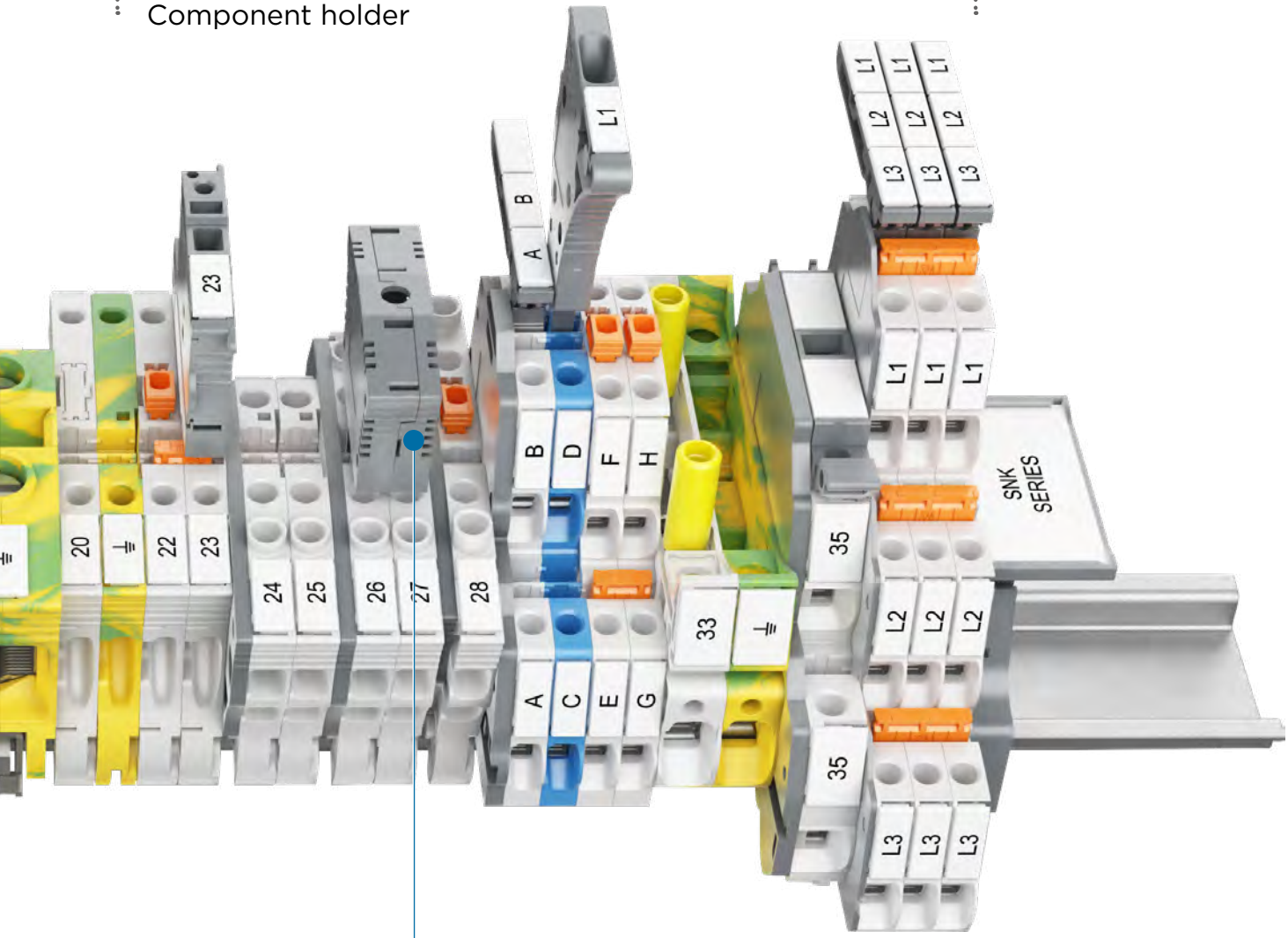

Plug
component holder

1SNK161089S0201

SNK series, terminal blocks
Screw clamp technology

Section		Feed-through					Ground			
4 mm²	12 AWG	ZS4					ZS4-PE			
	10 AWG									
6 mm²	10 AWG	ZS6	ZS6-3S	ZS6-4S			ZS6-PE	ZS6-3S-PE	ZS6-4S-PE	
10 mm²	6 AWG	ZS10					ZS10-PE			
16 mm²	4 AWG	ZS16					ZS16-PE			
25 mm²	3 AWG	ZS25					ZS25-PE			
35 mm²	0 AWG				ZS35					
	2 AWG									ZS35-PE
50 mm²	0 AWG				ZS50					ZS50-PE
70 mm²	00 AWG				ZS70					ZS70-PE
95 mm²	0000 AWG				ZS95					ZS95-PE
150 mm²	350 Kcmil					ZS150				
240 mm²	500 Kcmil					ZS240				

Section		Disconnect with blade					Disconnect with plug			
4 mm²	10 AWG	ZS4-S	ZS4-S-T2		ZS4-S-R1	ZS4-S-T2-R1	ZS4-SP	ZS4-SP-T2	ZS4-SP-R1	ZS4-SP-T2-R1
						ZS4-S-T2.3-R1				
6 mm²	10 AWG	ZS6-S		ZS6-S-4S-T2						
10 mm²	6 AWG	ZS10-S					ZS10-SP			

Section		For 5 x 20 mm fuses				Aligned for marshalling cabinets application			For 6.3 x 32 mm fuses (¼ x 1¼ in)		Aligned
4 mm²	10 AWG	ZS4-SF	ZS4-SF-T2	ZS4-SF-R1	ZS4-SF-R2	ZS4-R2	ZS4-PE-R2	ZS4-S-R2			
				ZS4-SF-R3	ZS4-SF-R4						
10 mm²	6 AWG								ZS10-SF	ZS10-SF-R1	ZS10-S-R2
										ZS10-SF-R3	

Clamp - Channels for jumpering or testing - Test socket - Blown-fuse indicator

1SNK161066S0201

Double deck										Triple deck
Feed-through		Ground		Disconnect with blade		For 5 x 20 mm and 5 x 25 mm fuses		Component holder		Feed-through
ZS4-D2	ZS4-D1							ZS4-D-CH-UD	ZS4-D-CH-DU	ZS4-T3
				ZS4-D2-S	ZS4-D2-S-T2	ZS4-D2-SF1	ZS4-D2-SF1-R1			ZS4-T3-R1
							ZS4-D2-SF-R3			
ZS6-D2	ZS6-D1	ZS6-D2-PE	ZS6-D1-PE							

Test & measurement			
Test disconnect with sliding link		Aligned with ZS10-ST	
ZS10-ST	ZS10-ST-T4	ZS10-R1	ZS10-PE-R1
	ZS10-ST-1		

For 5 x 20 mm and 5 x 25 mm fuses				Feed-through aligned with ZS4-SF1	
ZS4-SF1	ZS4-SF1-T2	ZS4-SF1-R1	ZS4-SF1-R2	ZS4-R1	ZS4-S-R3
		ZS4-SF1-R3	ZS4-SF1-R4		

1SNK161066S0201

ZS4 screw clamp terminal blocks

Feed-through - 5.2 mm 0.205 in spacing

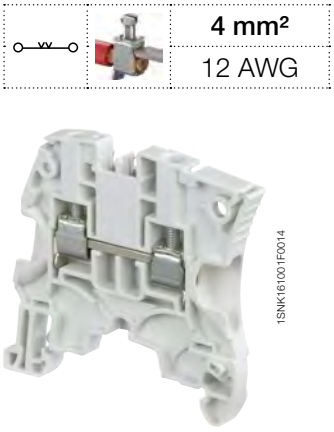

4 mm²
12 AWG

1SNK161001F0014

ZS4

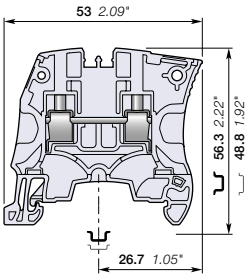

5.2 mm 0.205 in spacing

Description

- Save space by connecting conductors up to 4 mm² (without insulated ferrule, CB certified) 12 AWG in just 5.2 mm 0.205 in spacing,
- Perfectly adapted to solar applications: voltage is rated 1000 V AC / DC IEC.

Ordering details

Description	Color	Type	Part Number		Pkg qty	Weight (1 pce) g
Feed-through	Grey	ZS4	1SNK505010R0000		50	8.80
	Blue	ZS4-BL	1SNK505020R0000		50	8.80
	Orange	ZS4-OR	1SNK505030R0000		50	8.80
	Yellow	ZS4-YL	1SNK505060R0000		50	8.80
	Green	ZS4-GN	1SNK505061R0000		50	8.80
	Red	ZS4-RD	1SNK505062R0000		50	8.80
	Purple	ZS4-PR	1SNK505063R0000		50	8.80
	Brown	ZS4-BR	1SNK505064R0000		50	8.80
	White	ZS4-WH	1SNK505065R0000		50	8.80
	Black	ZS4-BK	1SNK505066R0000		50	8.80

Main technical data

Connecting capacity		IEC	UL - CSA
1 conductor per clamp	Rigid: Solid/Stranded	0.2 ... 4 mm²	24 ... 12 AWG
	Flexible without ferrule	0.22 ... 4 mm²	
	Flexible with non insulated ferrule	0.22 ... 4 mm²	24 ... 12 AWG
	Flexible with insulated ferrule	0.22 ... 2.5 mm²	24 ... 14 AWG
	Gauge	A3-B3	
2 conductors per clamp	Rigid: Solid/Stranded	0.2 ... 1.5 mm²	24 ... 16 AWG
	Flexible without ferrule	0.2 ... 1.5 mm²	
	Flexible with twin ferrule	0.22 ... 1.5 mm²	24 ... 16 AWG
Rated current / Rated cross section		32 A / 4 mm²	20 A / 12 AWG
Rated short-time withstand current (1s)		480 A	
Short Circuit Current Rating (with specific conditions)			100 kA
Rated voltage		1000 V	600 V
Impulse withstand voltage		8000 V	
Protection		IP20	NEMA 1
Increased safety Ex e		693 V 32 A IEC/EN 60079-7 - IM2 II 2 GD Ex eb I/II/IIIC – 600 V 20 A UL 60079-7 - Class I, Zone 1, AEx e II, Ex e II U	

Mounting instructions

Rail	TH 35-7.5, TH 35-15
Wire stripping length	10.5 mm 0.412 in
Tool	Flat screwdriver Ø 3.5 mm Ø 0.138 in
Torque	0.6 Nm ± 0.1 5.31 lb.in ± 0.885

The connecting capacity data for one Rigid: Solid/Stranded, or one Flexible conductor (when applicable) is a mandatory information required by IEC, UL and CSA standards (Copper conductors). All other data are provided as supplementary information only. For more details, please consult our CB, UL or CSA certificates and technical datasheet available on http://www.TE.com

CE, CB, RoHS, USR CNR, CSA, EAC Ex, ATEX, IECEx, BR-Ex e II, Haz Loc, BV, DNV, Rina

Accessories

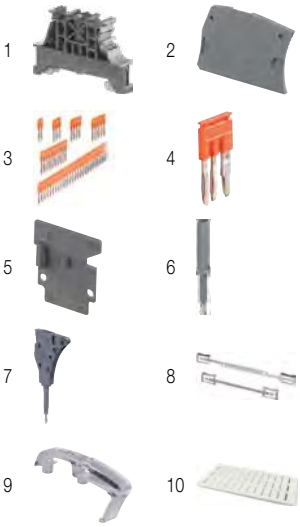

	Description			Color	Type	Part Number		Pkg qty	Weight (1 pce) g
1	End stops	10 mm	0.394 in	Dark grey	BAM4	1SNK900001R0000		50	14.00
2	End sections	2.2 mm	0.087 in	Dark grey	ES4	1SNK505910R0000		20	2.20
3	Jumper bars	2 poles	32 A (IEC)	Orange	JB5-2	1SNK905302R0000		50	1.30
		3 poles	32 A (IEC)		JB5-3	1SNK905303R0000		50	2.00
		4 poles	32 A (IEC)		JB5-4	1SNK905304R0000		50	2.70
		5 poles	32 A (IEC)		JB5-5	1SNK905305R0000		50	3.50
		10 poles	32 A (IEC)		JB5-10	1SNK905310R0000		30	7.10
		50 poles	32 A (IEC)		JB5-50	1SNK905350R0000		10	36.00
4	Cross spacing jumpers	3 poles	32 A (IEC)	Orange	JB85-3	1SNK900603R0000		10	2.80
5	Circuit separators	0 mm	0 in	Dark grey	CS	1SNK900101R0000		20	0.20
		3 mm	0.118 in		CS-R1	1SNK900103R0000		20	5.20
6	Test adapters	For test plugs DIA 2 mm 0.079 in		Dark grey	TP2	1SNK900203R0000		20	1.70
		For test plugs DIA 4 mm 0.157 in			TP4	1SNK900205R0000		20	2.40
7	Test connectors	5.2 mm 0.205 in spacing		Dark grey	TC5	1SNK900200R0000		10	5.20
		End module, 5.2 mm 0.205 in			TC5-R1	1SNK900201R0000		10	5.20
8	Shield connectors				SHBS	1SNK900600R0000		20	3.50
9	Protecting covers	5.2 mm 0.205 in spacing		Transparent	PL5	1SNK900618R0000		10	1.50
10	Terminal block markers	Blank marker		White	MG-CPM 13 41790	1SNB041790R0512		1960	0.23
		Blank card			MC512	1SNK140000R0000		22	9.00
					MC512PA	1SNK149999R0000		20	10.00
		Universal wire markers holder		Grey	UMH	1SNK900611R0000		10	0.20

Complete list of accessories is indicated in the terminal block datasheet including end stops.
Some accessories such as jumper bars may modify the terminal block's ratings: Complete information available in the accessories section of the catalog.

Ground screw clamp terminal blocks

Description		Color	Type	Part Number		Pkg qty	Weight (1 pce) g
Ground	Profile aligned with ZS4	Green-yellow	ZS4-PE	1SNK505150R0000		20	12.10

1SNK161001S0201

Technical data valid for copper conductors only.

ZS6 screw clamp terminal blocks
Feed-through - 6 mm 0.236 in spacing

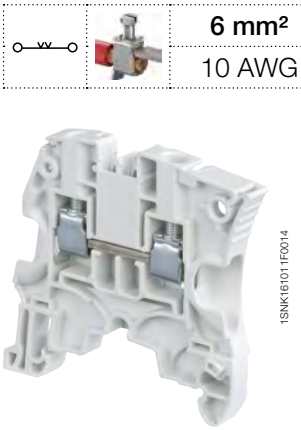

ZS6

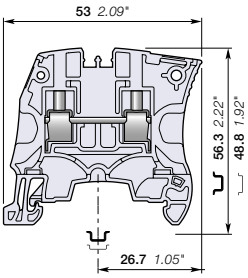

6 mm 0.236 in spacing

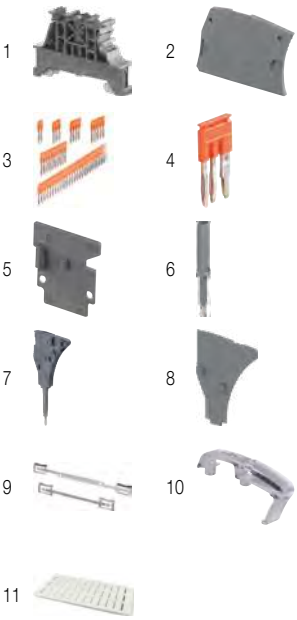

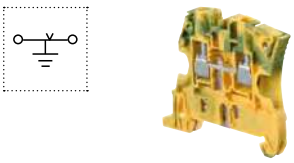

6 mm²
10 AWG

Description

Save space by connecting conductors up to 6 mm² (without insulated ferrule, CB certified) 10 AWG in just 6 mm 0.236 in spacing,

– Perfectly adapted to solar applications: voltage is rated 1000 V AC / DC IEC.

Ordering details

Description	Color	Type	Part Number		Pkg qty	Weight (1 pce) g
Feed-through	Grey	ZS6	1SNK506010R0000		50	10.60
	Blue	ZS6-BL	1SNK506020R0000		50	10.60
	Orange	ZS6-OR	1SNK506030R0000		50	10.60
	Yellow	ZS6-YL	1SNK506060R0000		50	10.60
	Green	ZS6-GN	1SNK506061R0000		50	10.60
	Red	ZS6-RD	1SNK506062R0000		50	10.60
	Purple	ZS6-PR	1SNK506063R0000		50	10.60
	Brown	ZS6-BR	1SNK506064R0000		50	10.60
	White	ZS6-WH	1SNK506065R0000		50	10.60
	Black	ZS6-BK	1SNK506066R0000		50	10.60

Main technical data

Connecting capacity		IEC	UL - CSA
1 conductor per clamp	Rigid: Solid/Stranded	0.2 ... 6 mm²	24 ... 10 AWG
	Flexible without ferrule	0.2 ... 6 mm²	
	Flexible with non insulated ferrule	0.22 ... 4 mm²	24 ... 12 AWG
	Flexible with insulated ferrule	0.22 ... 4 mm²	24 ... 12 AWG
	Gauge	A4-B3	
2 conductors per clamp	Rigid: Solid/Stranded	0.2 ... 2.5 mm²	24 ... 14 AWG
	Flexible without ferrule	0.2 ... 2.5 mm²	
	Flexible with twin ferrule	0.22 ... 2.5 mm²	24 ... 14 AWG
Rated current / Rated cross section		41 A / 6 mm²	30 A / 10 AWG
Rated short-time withstand current (1s)		720 A	
Short Circuit Current Rating (with specific conditions)			100 kA
Rated voltage		1000 V	600 V
Impulse withstand voltage		8000 V	
Protection		IP20	NEMA 1
Increased safety Ex e		693 V 41 A IEC/EN 60079-7 - IM2 II 2 GD Ex eb I/II/IIIC – 600 V 30 A UL 60079-7 - Class I, Zone 1, AEx e II, Ex e II U	

The connecting capacity data for one Rigid: Solid/Stranded, or one Flexible conductor (when applicable) is a mandatory information required by IEC, UL and CSA standards (Copper conductors). All other data are provided as supplementary information only. For more details, please consult our CB, UL or CSA certificates and technical datasheet available on http://www.TE.com

CE, CB, RoHS, USR CNR, CSA, EAC Ex, ATEX, IECEx, BR-Ex e II, Haz Loc, BV, DNV, Rina

Mounting instructions

Rail	TH 35-7.5, TH 35-15
Wire stripping length	10.5 mm 0.412 in
Tool	Flat screwdriver Ø 4 mm Ø 0.157 in
Torque	0.85 Nm ± 0.15 7.52 lb.in ± 1.33

Accessories

	Description			Color	Type	Part Number		Pkg qty	Weight (1 pce) g
1	**End stops**	10 mm	0.394 in	Dark grey	BAM4	1SNK900001R0000		50	14.00
2	**End sections**	2.2 mm	0.087 in	Dark grey	ES4	1SNK505910R0000		20	2.20
3	**Jumper bars**	2 poles	41 A (IEC)	Orange	JB6-2	1SNK906302R0000		50	1.30
		3 poles	41 A (IEC)		JB6-3	1SNK906303R0000		50	2.10
		4 poles	41 A (IEC)		JB6-4	1SNK906304R0000		50	2.90
		5 poles	41 A (IEC)		JB6-5	1SNK906305R0000		50	3.60
		10 poles	41 A (IEC)		JB6-10	1SNK906310R0000		20	7.40
		50 poles	41 A (IEC)		JB6-50	1SNK906350R0000		10	38.10
4	**Cross spacing jumpers**	3 poles	32 A (IEC)	Orange	JB85-3	1SNK900603R0000		10	2.80
5	**Circuit separators**	0 mm	0 in	Dark grey	CS	1SNK900101R0000		20	0.20
		3 mm	0.118 in		CS-R1	1SNK900103R0000		20	5.20
6	**Test adapters**	For test plugs DIA 2 mm 0.079 in		Dark grey	TP2	1SNK900203R0000		20	1.70
		For test plugs DIA 4 mm 0.157 in			TP4	1SNK900205R0000		20	2.40
7	**Test connectors**	End module, 5.2 mm 0.205 in		Dark grey	TC5-R1	1SNK900201R0000		10	5.20
8	**Spacers**	0.8 mm	0.031 in	Dark grey	ES-TC6	1SNK900105R0000		10	0.80
9	**Shield connectors**				SHBS	1SNK900600R0000		20	3.50
10	**Protecting covers**	6 mm 0.236 in spacing		Transparent	PL6	1SNK900619R0000		10	1.80
11	**Terminal block markers**	Blank marker		White	MG-CPM 13 41791	1SNB041791R0612		1680	0.27
		Blank card			MC612	1SNK150000R0000		22	10.00
					MC612PA	1SNK159999R0000		20	11.00
		Universal wire markers holder		Grey	UMH	1SNK900611R0000		10	0.20

Complete list of accessories is indicated in the terminal block datasheet including end stops.
Some accessories such as jumper bars may modify the terminal block's ratings: Complete information available in the accessories section of the catalog.

Ground screw clamp terminal blocks

Description		Color	Type	Part Number		Pkg qty	Weight (1 pce) g
Ground	Profile aligned with ZS6	Green-yellow	ZS6-PE	1SNK506150R0000		20	13.70

Technical data valid for copper conductors only.

1SNK161008S0201

3

ZS6-3S screw clamp terminal blocks

Feed-through with 3 connections - 6 mm 0.236 in spacing

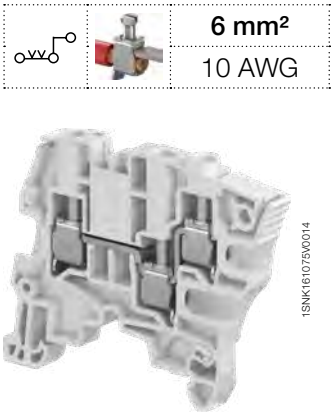

6 mm²
10 AWG

1SNK161075V0014

ZS6-3S

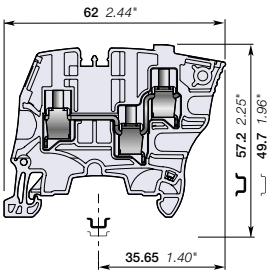

6 mm 0.236 in spacing

Description

- Recommended for energy markets and highly demanding applications requiring that only one conductor be connected per clamp,
- These blocks offer a high density connecting capacity (up to 3 connections) in a low profile and just 6 mm 0.236 in spacing.

Ordering details

Description	Color	Type	Part Number		Pkg qty	Weight (1 pce) g
Feed-through	Grey	ZS6-3S	1SNK506011R0000		50	11.80
	Blue	ZS6-3S-BL	1SNK506021R0000		50	11.80
	Yellow	ZS6-3S-YL	1SNK506067R0000		50	11.80

Main technical data

Connecting capacity		IEC	UL - CSA
1 conductor per clamp	Rigid: Solid/Stranded	0.2 ... 6 mm²	24 ... 10 AWG
	Flexible without ferrule	0.22... 6 mm²	
	Flexible with non insulated ferrule	0.22 ... 4 mm²	24 ... 12 AWG
	Flexible with insulated ferrule	0.22 ... 4 mm²	24 ... 12 AWG
	Gauge	A4-B3	
2 conductors per clamp	Rigid: Solid/Stranded	0.2 ... 2.5 mm²	24 ... 14 AWG
	Flexible without ferrule	0.2 ... 2.5 mm²	
	Flexible with twin ferrule	0.22 ... 2.5 mm²	24 ... 14 AWG
Rated current / Rated cross section		32 A / 4 mm²	30 A / 10 AWG
Maximum current / Maximum cross section		39 A / 6 mm²	
Rated short-time withstand current (1s)		480 A	
Short Circuit Current Rating (with specific conditions)			100 kA
Rated voltage		800 V	600 V
Impulse withstand voltage		8000 V	
Protection		IP20	NEMA 1
Increased safety Ex e		550 V 29 A IEC/EN 60079-7 - IM2 II 2 GD Ex eb I/II/IIIC – 600 V 30 A	

Mounting instructions

Rail	TH 35-7.5, TH 35-15
Wire stripping length	10.5 mm 0.413 in
Tool	Flat screwdriver Ø 4 mm Ø 0.157 in
Torque	0.75 Nm ± 0.05 6.64 lb.in ± 0.443

The connecting capacity data for one Rigid: Solid/Stranded, or one Flexible conductor (when applicable) is a mandatory information required by IEC, UL and CSA standards (Copper conductors). All other data are provided as supplementary information only. For more details, please consult our CB, UL or CSA certificates and technical datasheet available on http://www.TE.com

CE, CB, RoHS, USR, CSA, EAC Ex, ATEX, IECEx, BR-Ex e II, Haz Loc, BV, DNV

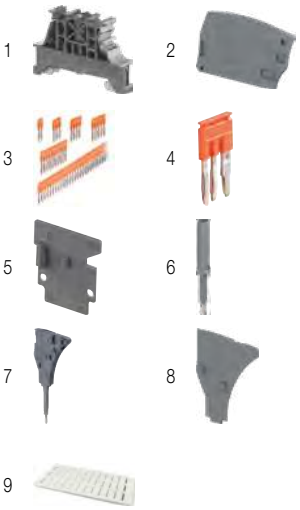

Accessories

	Description			Color	Type	Part Number		Pkg qty	Weight (1 pce) g
1	End stops	10 mm	0.394 in	Dark grey	BAM4	1SNK900001R0000		50	14.00
2	End sections	2.2 mm	0.087 in	Dark grey	ES6-3S	1SNK505912R0000		20	2.50
3	Jumper bars	2 poles	41 A (IEC)	Orange	JB6-2	1SNK906302R0000		50	1.30
		3 poles	41 A (IEC)		JB6-3	1SNK906303R0000		50	2.10
		4 poles	41 A (IEC)		JB6-4	1SNK906304R0000		50	2.90
		5 poles	41 A (IEC)		JB6-5	1SNK906305R0000		50	3.60
		10 poles	41 A (IEC)		JB6-10	1SNK906310R0000		20	7.40
		50 poles	41 A (IEC)		JB6-50	1SNK906350R0000		10	38.10
4	Cross spacing jumpers	3 poles	32 A (IEC)	Orange	JB85-3	1SNK900603R0000		10	2.80
5	Circuit separators	0 mm	0 in	Dark grey	CS	1SNK900101R0000		20	0.20
		3 mm	0.118 in		CS-R1	1SNK900103R0000		20	5.20
6	Test adapters	For test plugs DIA 2 mm 0.079 in		Dark grey	TP2	1SNK900203R0000		20	1.70
		For test plugs DIA 4 mm 0.157 in			TP4	1SNK900205R0000		20	2.40
7	Test connectors	End module, 5.2 mm 0.205 in		Dark grey	TC5-R1	1SNK900201R0000		10	5.20
8	Spacers	0.8 mm	0.031 in	Dark grey	ES-TC6	1SNK900105R0000		10	0.80
9	Terminal block markers	Blank marker		White	MG-CPM 13 41791	1SNB041791R0612		1680	0.27
		Blank card			MC612	1SNK150000R0000		22	10.00
					MC612PA	1SNK159999R0000		20	11.00
		Universal wire markers holder		Grey	UMH	1SNK900611R0000		10	0.20

Complete list of accessories is indicated in the terminal block datasheet including end stops.
Some accessories such as jumper bars may modify the terminal block's ratings: Complete information available in the accessories section of the catalog.

Ground screw clamp terminal blocks

Description		Color	Type	Part Number		Pkg qty	Weight (1 pce) g
Ground	Profile aligned with ZS6-3S	Green-yellow	ZS6-3S-PE	1SNK506151R0000		25	16.20

1SNK161067S0201

Technical data valid for copper conductors only.

ZS6-4S screw clamp terminal blocks

Feed-through with 4 connections - 6 mm 0.236 in spacing

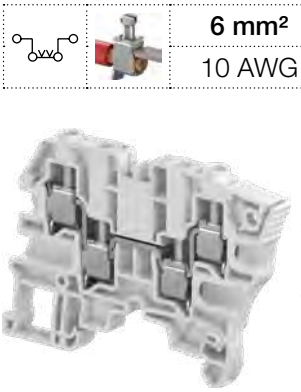

6 mm²
10 AWG

1SNK161078V0014

ZS6-4S

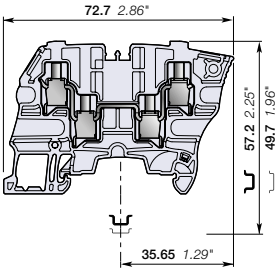

6 mm 0.236 in spacing

Description

- High density wiring (one potential distribution on 4 independent screw clamps) in a very low profile and just 6 mm 0.236 in spacing,
- Recommended for energy markets and highly demanding applications requiring that only one conductor be connected per clamp.

Ordering details

Description	Color	Type	Part Number		Pkg qty	Weight (1 pce) g
Feed-through	Grey	ZS6-4S	1SNK506012R0000		50	15.00
	Blue	ZS6-4S-BL	1SNK506022R0000		50	15.00
	Yellow	ZS6-4S-YL	1SNK506068R0000		50	15.00

Main technical data

Connecting capacity		IEC	UL - CSA
1 conductor per clamp	Rigid: Solid/Stranded	0.2 ... 6 mm²	24 ... 10 AWG
	Flexible without ferrule	0.22... 6 mm²	
	Flexible with non insulated ferrule	0.22 ... 4 mm²	24 ... 12 AWG
	Flexible with insulated ferrule	0.22 ... 4 mm²	24 ... 12 AWG
	Gauge	A4-B3	
2 conductors per clamp	Rigid: Solid/Stranded	0.2 ... 2.5 mm²	24 ... 14 AWG
	Flexible without ferrule	0.2 ... 2.5 mm²	
	Flexible with twin ferrule	0.22 ... 2.5 mm²	24 ... 14 AWG
Rated current / Rated cross section		32 A / 4 mm²	30 A / 10 AWG
Maximum current / Maximum cross section		39 A / 6 mm²	
Rated short-time withstand current (1s)		480 A	
Short Circuit Current Rating (with specific conditions)			100 kA
Rated voltage		800 V	600 V
Impulse withstand voltage		8000 V	
Protection		IP20	NEMA 1
Increased safety Ex e		550 V 29 A IEC/EN 60079-7 - IM2 II 2 GD Ex eb I/II/IIIC – 600 V 30 A	

Mounting instructions

Rail	TH 35-7.5, TH 35-15
Wire stripping length	10.5 mm 0.413 in
Tool	Flat screwdriver Ø 4 mm Ø 0.157 in
Torque	0.75 Nm ± 0.05 6.64 lb.in ± 0.443

The connecting capacity data for one Rigid: Solid/Stranded, or one Flexible conductor (when applicable) is a mandatory information required by IEC, UL and CSA standards (Copper conductors). All other data are provided as supplementary information only. For more details, please consult our CB, UL or CSA certificates and technical datasheet available on http://www.TE.com

CE, CB, RoHS, USR, CSA, EAC Ex, ATEX, IECEx, BR-Ex e II, Haz Loc, BV, DNV

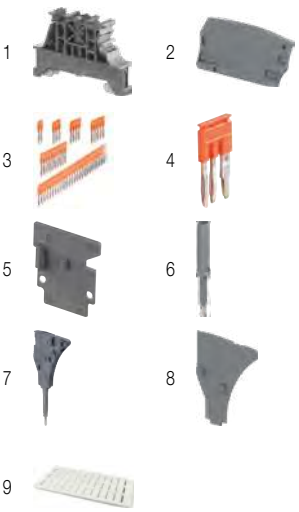

Accessories

	Description			Color	Type	Part Number		Pkg qty	Weight (1 pce) g
1	End stops	10 mm	0.394 in	Dark grey	BAM4	1SNK900001R0000		50	14.00
2	End sections	2.2 mm	0.087 in	Dark grey	ES6-4S	1SNK505911R0000		20	3.10
3	Jumper bars	2 poles	41 A (IEC)	Orange	JB6-2	1SNK906302R0000		50	1.30
		3 poles	41 A (IEC)		JB6-3	1SNK906303R0000		50	2.10
		4 poles	41 A (IEC)		JB6-4	1SNK906304R0000		50	2.90
		5 poles	41 A (IEC)		JB6-5	1SNK906305R0000		50	3.60
		10 poles	41 A (IEC)		JB6-10	1SNK906310R0000		20	7.40
		50 poles	41 A (IEC)		JB6-50	1SNK906350R0000		10	38.10
4	Cross spacing jumpers	3 poles	32 A (IEC)	Orange	JB85-3	1SNK900603R0000		10	2.80
5	Circuit separators	0 mm	0 in	Dark grey	CS	1SNK900101R0000		20	0.20
		3 mm	0.118 in		CS-R1	1SNK900103R0000		20	5.20
6	Test adapters	For test plugs DIA 2 mm 0.079 in		Dark grey	TP2	1SNK900203R0000		20	1.70
		For test plugs DIA 4 mm 0.157 in			TP4	1SNK900205R0000		20	2.40
7	Test connectors	End module, 5.2 mm 0.205 in		Dark grey	TC5-R1	1SNK900201R0000		10	5.20
8	Spacers	0.8 mm	0.031 in	Dark grey	ES-TC6	1SNK900105R0000		10	0.80
9	Terminal block markers	Blank marker		White	MG-CPM 13 41791	1SNB041791R0612		1680	0.27
		Blank card			MC612	1SNK150000R0000		22	10.00
					MC612PA	1SNK159999R0000		20	11.00
		Universal wire markers holder		Grey	UMH	1SNK900611R0000		10	0.20

Complete list of accessories is indicated in the terminal block datasheet including end stops.
Some accessories such as jumper bars may modify the terminal block's ratings: Complete information available in the accessories section of the catalog.

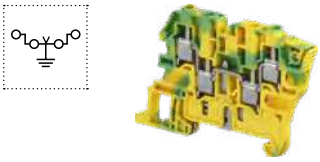

Ground screw clamp terminal blocks

Description		Color	Type	Part Number		Pkg qty	Weight (1 pce) g
Ground	Profile aligned with ZS6-4S	Green-yellow	ZS6-4S-PE	1SNK506152R0000		25	19.40

1SNK161068S0201

Technical data valid for copper conductors only.

ZS10 screw clamp terminal blocks
Feed-through - 8 mm 0.315 in spacing

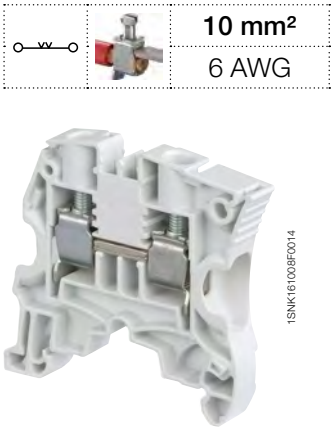

10 mm²	
6 AWG	

1SNK161009F0014

ZS10

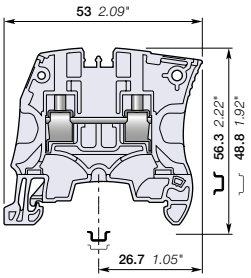

8 mm 0.315 in spacing

Description

- Save space by connecting conductors up to 10 mm² (without insulated ferrule, CB certified) 6 AWG in just 8 mm 0.315 in spacing,
- Perfectly adapted to solar applications: voltage is rated 1000 V AC / DC IEC.

Ordering details

Description	Color	Type	Part Number		Pkg qty	Weight (1 pce) g
Feed-through	Grey	ZS10	1SNK508010R0000		50	14.10
	Blue	ZS10-BL	1SNK508020R0000		50	14.10
	Orange	ZS10-OR	1SNK508030R0000		50	14.10
	Yellow	ZS10-YL	1SNK508060R0000		50	14.10
	Green	ZS10-GN	1SNK508061R0000		50	14.10
	Red	ZS10-RD	1SNK508062R0000		50	14.10
	Purple	ZS10-PR	1SNK508063R0000		50	14.10
	Brown	ZS10-BR	1SNK508064R0000		50	14.10
	White	ZS10-WH	1SNK508065R0000		50	14.10
	Black	ZS10-BK	1SNK508066R0000		50	14.10

Main technical data

Connecting capacity		IEC	UL - CSA
1 conductor per clamp	Rigid: Solid/Stranded	0.5 ... 10 mm²	24 ... 6 AWG
	Flexible without ferrule	0.5 ... 10 mm²	
	Flexible with non insulated ferrule	0.5 ... 10 mm²	24 ... 8 AWG
	Flexible with insulated ferrule	0.5 ... 6 mm²	24 ... 10 AWG
	Gauge	A5-B5	
2 conductors per clamp	Rigid: Solid/Stranded	0.5 ... 4 mm²	20 ... 12 AWG
	Flexible without ferrule	0.5 ... 4 mm²	
	Flexible with twin ferrule	0.5 ... 4 mm²	20 ... 12 AWG
Rated current / Rated cross section		57 A / 10 mm²	42 A / 6 AWG
Rated short-time withstand current (1s)		1200 A	
Short Circuit Current Rating (with specific conditions)			100 kA
Rated voltage		1000 V	600 V
Impulse withstand voltage		8000 V	
Protection		IP20	NEMA 1
Increased safety Ex e		693 V 57 A IEC/EN 60079-7 - IM2 II 2 GD Ex eb I/II/IIIC – 600 V 42 A UL 60079-7 - Class I, Zone 1, AEx e II, Ex e II U	

The connecting capacity data for one Rigid: Solid/Stranded, or one Flexible conductor (when applicable) is a mandatory information required by IEC, UL and CSA standards (Copper conductors). All other data are provided as supplementary information only. For more details, please consult our CB, UL or CSA certificates and technical datasheet available on http://www.TE.com

CE, CB, RoHS, USR CNR, CSA, EAC Ex, ATEX, IECEx, BR-Ex e II, Haz Loc, BV, DNV, Rina

Mounting instructions

Rail	TH 35-7.5, TH 35-15
Wire stripping length	12 mm 0.472 in
Tool	Flat screwdriver Ø 4 mm Ø 0.157 in
Torque	1.3 Nm ± 0.3 11.5 lb.in ± 2.65

Accessories

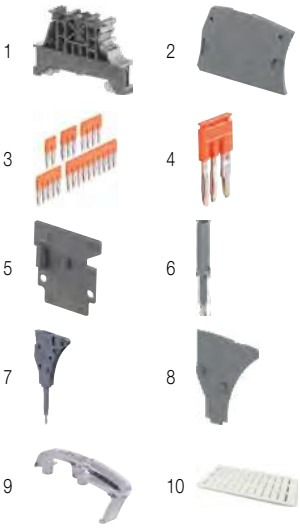

	Description			Color	Type	Part Number		Pkg qty	Weight (1 pce) g
1	End stops	10 mm	0.394 in	Dark grey	BAM4	1SNK900001R0000		50	14.00
2	End sections	2.2 mm	0.087 in	Dark grey	ES4	1SNK505910R0000		20	2.20
3	Jumper bars	2 poles	57 A (IEC)	Orange	JB8-2	1SNK908302R0000		50	2.70
		3 poles	57 A (IEC)		JB8-3	1SNK908303R0000		50	4.10
		4 poles	57 A (IEC)		JB8-4	1SNK908304R0000		50	5.60
		5 poles	57 A (IEC)		JB8-5	1SNK908305R0000		40	7.00
		10 poles	57 A (IEC)		JB8-10	1SNK908310R0000		20	14.20
4	Cross spacing jumpers	3 poles	32 A (IEC)	Orange	JB85-3	1SNK900603R0000		10	2.80
5	Circuit separators	0 mm	0 in	Dark grey	CS	1SNK900101R0000		20	0.20
		3 mm	0.118 in		CS-R1	1SNK900103R0000		20	5.20
6	Test adapters	For test plugs DIA 2 mm 0.079 in		Dark grey	TP2	1SNK900203R0000		20	1.70
		For test plugs DIA 4 mm 0.157 in			TP4	1SNK900205R0000		20	2.40
7	Test connectors	5.2 mm 0.205 in spacing		Dark grey	TC5	1SNK900200R0000		10	5.20
		End module, 5.2 mm 0.205 in			TC5-R1	1SNK900201R0000		10	5.20
8	Spacers	2.8 mm	0.110 in	Dark grey	ES-TC8	1SNK900104R0000		10	1.40
9	Protecting covers	8 mm 0.315 in spacing		Transparent	PL8	1SNK900620R0000		10	2.60
10	Terminal block markers	Blank marker		White	MG-CPM 13 41791	1SNB041791R0612		1680	0.27
		Blank card			MC812	1SNK160000R0000		22	10.00
					MC812PA	1SNK169999R0000		20	14.00
		Universal wire markers holder		Grey	UMH	1SNK900611R0000		10	0.20

Complete list of accessories is indicated in the terminal block datasheet including end stops.
Some accessories such as jumper bars may modify the terminal block's ratings: Complete information available in the accessories section of the catalog.

Ground screw clamp terminal blocks

Description		Color	Type	Part Number		Pkg qty	Weight (1 pce) g
Ground	Profile aligned with ZS10	Green-yellow	ZS10-PE	1SNK508150R0000		20	22.50

1SNK161004S0201

Technical data valid for copper conductors only.

ZS16 screw clamp terminal blocks
Feed-through - 10 mm 0.394 in spacing

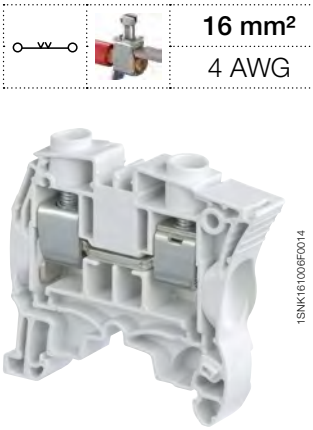

16 mm²	
4 AWG	

1SNK161006F0014

ZS16

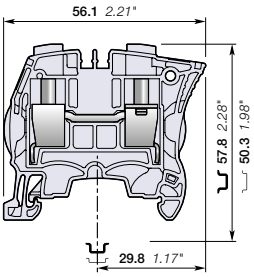

10 mm 0.394 in spacing

Description

- Save space by connecting conductors up to 16 mm² (without insulated ferrule, CB certified) 4 AWG in just 10 mm 0.394 in spacing,
- Perfectly adapted to solar applications: voltage is rated 1000 V AC / DC IEC.

Ordering details

Description	Color	Type	Part Number		Pkg qty	Weight (1 pce) g
Feed-through	Grey	ZS16	1SNK510010R0000		25	20.20
	Blue	ZS16-BL	1SNK510020R0000		25	20.20
	Orange	ZS16-OR	1SNK510030R0000		25	20.20

Main technical data

Connecting capacity		IEC	UL - CSA
1 conductor per clamp	Rigid: Solid/Stranded	0.5 ... 16 mm²	24 ... 4 AWG
	Flexible without ferrule	0.5 ... 16 mm²	
	Flexible with non insulated ferrule	0.5 ... 16 mm²	24 ... 4 AWG
	Flexible with insulated ferrule	0.5 ... 10 mm²	24 ... 8 AWG
	Gauge	A6-B6	
2 conductors per clamp	Rigid: Solid/Stranded	0.5 ... 6 mm²	20 ... 10 AWG
	Flexible without ferrule	0.5 ... 6 mm²	
	Flexible with twin ferrule	0.5 ... 6 mm²	20 ... 10 AWG
Rated current / Rated cross section		76 A / 16 mm²	67 A / 4 AWG
Rated short-time withstand current (1s)		1920 A	
Short Circuit Current Rating (with specific conditions)			100 kA
Rated voltage		1000 V	600 V
Impulse withstand voltage		8000 V	
Protection		IP20	NEMA 1
Increased safety Ex e		693 V 76 A IEC/EN 60079-7 - IM2 II 2 GD Ex eb I/II/IIIC – 600 V 67 A UL 60079-7 - Class I, Zone 1, AEx e II, Ex e II U	

Mounting instructions

Rail	TH 35-7.5, TH 35-15
Wire stripping length	13.5 mm 0.531 in
Tool	Flat screwdriver Ø 5.5 mm Ø 0.217 in
Torque	1.8 Nm ± 0.2 15.9 lb.in ± 1.77

The connecting capacity data for one Rigid: Solid/Stranded, or one Flexible conductor (when applicable) is a mandatory information required by IEC, UL and CSA standards (Copper conductors). All other data are provided as supplementary information only. For more details, please consult our CB, UL or CSA certificates and technical datasheet available on http://www.TE.com

CE, CB, RoHS, USR CNR, CSA, EAC Ex, ATEX, IECEx, BR-Ex e II, Haz Loc, BV, DNV, Rina

Accessories

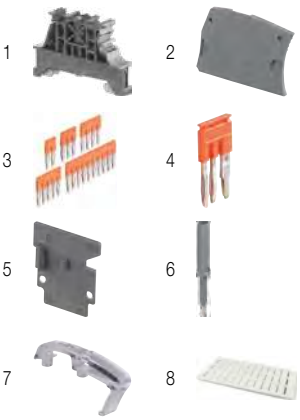

	Description			Color	Type	Part Number		Pkg qty	Weight (1 pce) g
1	End stops	10 mm	0.394 in	Dark grey	BAM4	1SNK900001R0000		50	14.00
2	End sections	2.2 mm	0.087 in	Dark grey	ES4	1SNK505910R0000		20	2.20
3	Jumper bars	2 poles	76 A (IEC)	Orange	JB10-2	1SNK910302R0000		50	4.60
		3 poles	76 A (IEC)		JB10-3	1SNK910303R0000		50	7.10
		4 poles	76 A (IEC)		JB10-4	1SNK910304R0000		40	9.40
		5 poles	76 A (IEC)		JB10-5	1SNK910305R0000		30	12.00
		10 poles	76 A (IEC)		JB10-10	1SNK910310R0000		20	24.00
4	Cross spacing jumpers	3 poles	32 A (IEC)	Orange	JB85-3	1SNK900603R0000		10	2.80
5	Circuit separators	0 mm	0 in	Dark grey	CS	1SNK900101R0000		20	0.20
		3 mm	0.118 in		CS-R1	1SNK900103R0000		20	5.20
6	Test adapters	For test plugs DIA 2 mm 0.079 in		Dark grey	TP2	1SNK900203R0000		20	1.70
		For test plugs DIA 4 mm 0.157 in			TP4	1SNK900205R0000		20	2.40
7	Protecting covers	10 mm 0.394 in spacing		Transparent	PL10	1SNK900621R0000		10	3.10
8	Terminal block markers	Blank marker		White	MG-CPM 13 41791	1SNB041791R0612		1680	0.27
		Blank card			MC812	1SNK160000R0000		22	10.00
					MC812PA	1SNK169999R0000		20	14.00
		Universal wire markers holder		Grey	UMH	1SNK900611R0000		10	0.20

Complete list of accessories is indicated in the terminal block datasheet including end stops.
Some accessories such as jumper bars may modify the terminal block's ratings: Complete information available in the accessories section of the catalog.

Ground screw clamp terminal blocks

Description		Color	Type	Part Number		Pkg qty	Weight (1 pce) g
Ground	Profile aligned with ZS16	Green-yellow	ZS16-PE	1SNK510150R0000		20	32.00

1SNK161017S0201

Technical data valid for copper conductors only.

ZS25 screw clamp terminal blocks
Feed-through - 12 mm 0.472 in spacing

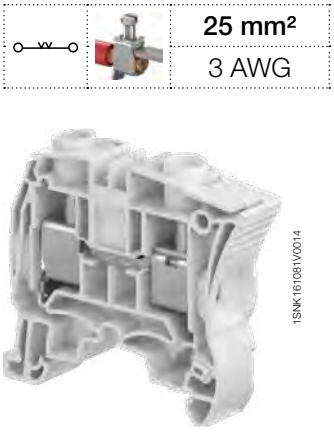

25 mm²
3 AWG

1SNK161081V0014

ZS25

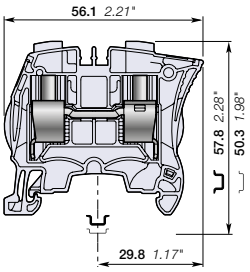

12 mm 0.472 in spacing

Description

- Save space by connecting conductors up to 25 mm² (without insulated ferrule, CB certified) 3 AWG in just 12 mm 0.472 in spacing,
- Perfectly adapted to solar applications: voltage is rated 1000 V AC / DC IEC.

Ordering details

Description	Color	Type	Part Number		Pkg qty	Weight (1 pce) g
Feed-through	Grey	ZS25	1SNK512010R0000		25	21.40
	Blue	ZS25-BL	1SNK512020R0000		25	21.40
	Yellow	ZS25-YL	1SNK512060R0000		25	21.40

Main technical data

Connecting capacity		IEC	UL - CSA
1 conductor per clamp	Rigid: Solid/Stranded	0.5 ... 25 mm²	24 ... 3 AWG
	Flexible without ferrule	0.5 ... 25 mm²	
	Flexible with non insulated ferrule	0.5 ... 16 mm²	24 ... 4 AWG
	Flexible with insulated ferrule	0.5 ... 16 mm²	24 ... 8 AWG
	Gauge	A6-B6	
2 conductors per clamp	Rigid: Solid/Stranded	0.5 ... 10 mm²	20 ... 10 AWG
	Flexible without ferrule	0.5 ... 10 mm²	
	Flexible with twin ferrule	0.5 ... 10 mm²	20 ... 10 AWG
Rated current / Rated cross section		76 A / 16 mm²	100 A / 3 AWG
Maximum current / Maximum cross section		101 A / 25 mm²	
Rated short-time withstand current (1s)		1920 A	
Short Circuit Current Rating (with specific conditions)			100 kA
Rated voltage		1000 V	600 V
Impulse withstand voltage		8000 V	
Protection		IP20	NEMA 1
Increased safety Ex e		693 V 69 A IEC/EN 60079-7 - IM2 II 2 GD Ex eb I/II/IIIC – 600 V 100 A	

Mounting instructions

Rail	TH 35-7.5, TH 35-15
Wire stripping length	13.5 mm 0.531 in
Tool	Flat screwdriver Ø 5.5 mm Ø 0.217 in
Torque	1.8 Nm ± 0.2 15.9 lb.in ± 1.77

The connecting capacity data for one Rigid: Solid/Stranded, or one Flexible conductor (when applicable) is a mandatory information required by IEC, UL and CSA standards (Copper conductors). All other data are provided as supplementary information only. For more details, please consult our CB, UL or CSA certificates and technical datasheet available on http://www.TE.com

CE, CB, RoHS, USR CNR, CSA, EAC Ex, ATEX, IECEx, BR-Ex e II, Haz Loc, BV, DNV

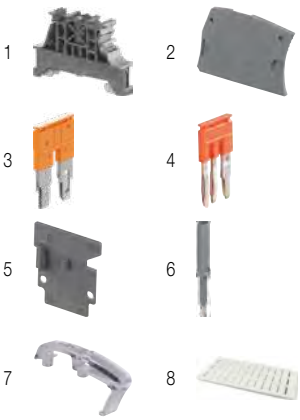

Accessories

	Description			Color	Type	Part Number		Pkg qty	Weight (1 pce) g
1	End stops	10 mm	0.394 in	Dark grey	BAM4	1SNK900001R0000		50	14.00
2	End sections	2.2 mm	0.087 in	Dark grey	ES4	1SNK505910R0000		20	2.20
3	Jumper bars	2 poles	76 A (IEC)	Orange	JB12-2	1SNK912302R0000		50	4.90
		3 poles	76 A (IEC)		JB12-3	1SNK912303R0000		50	7.60
		5 poles	76 A (IEC)		JB12-5	1SNK912305R0000		20	12.90
4	Cross spacing jumpers	3 poles	32 A (IEC)	Orange	JB85-3	1SNK900603R0000		10	2.80
5	Circuit separators	0 mm	0 in	Dark grey	CS	1SNK900101R0000		20	0.20
		3 mm	0.118 in		CS-R1	1SNK900103R0000		20	5.20
6	Test adapters	For test plugs DIA 2 mm 0.079 in		Dark grey	TP2	1SNK900203R0000		20	1.70
		For test plugs DIA 4 mm 0.157 in			TP4	1SNK900205R0000		20	2.40
7	Protecting covers	10 mm 0.394 in spacing		Transparent	PL10	1SNK900621R0000		10	3.10
8	Terminal block markers	Blank marker		White	MG-CPM 13 41791	1SNB041791R0612		1680	0.27
		Blank card			MC812	1SNK160000R0000		22	10.00
					MC812PA	1SNK169999R0000		20	14.00
		Universal wire markers holder		Grey	UMH	1SNK900611R0000		10	0.20

Complete list of accessories is indicated in the terminal block datasheet including end stops.
Some accessories such as jumper bars may modify the terminal block's ratings: Complete information available in the accessories section of the catalog.

Ground screw clamp terminal blocks

Description		Color	Type	Part Number		Pkg qty	Weight (1 pce) g
Ground	Profile aligned with ZS25	Green-yellow	ZS25-PE	1SNK512150R0000		20	38.00

1SNK161078S0201

Technical data valid for copper conductors only.

ZS35 screw clamp terminal blocks
Feed-through - 16 mm 0.630 in spacing

ZS35

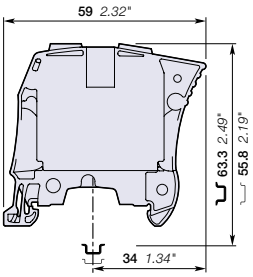

16 mm 0.630 in spacing

	35 mm²
	0 AWG

Description

Closed terminal block:
- No end section needed,
- Optimized rigidity,
- Perfectly adapted to solar applications: voltage is rated 1000 V AC / DC IEC.

Ordering details

Description		Color	Type	Part Number		Pkg qty	Weight (1 pce) g
Feed-through	Closed block	Grey	ZS35	1SNK516010R0000		20	53.40
		Blue	ZS35-BL	1SNK516020R0000		20	53.40
		Orange	ZS35-OR	1SNK516030R0000		20	53.40

Main technical data

Connecting capacity		IEC	UL - CSA
1 conductor per clamp	Rigid: Solid/Stranded	6 ... 35 mm²	10 ... 0 AWG
	Flexible without ferrule	6 ... 35 mm²	
	Flexible with non insulated ferrule	4 ... 35 mm²	10 ... 2 AWG
	Flexible with insulated ferrule	4 ... 35 mm²	10 ... 2 AWG
	Gauge	A9-B9	
2 conductors per clamp	Rigid: Solid/Stranded	6 ... 16 mm²	10 ... 6 AWG
	Flexible without ferrule	6 ... 16 mm²	
	Flexible with twin ferrule	4 ... 10 mm²	12 ... 8 AWG
Rated current / Rated cross section		125 A / 35 mm²	150 A / 0 AWG
Rated short-time withstand current (1s)		4200 A	
Short Circuit Current Rating (with specific conditions)			100 kA
Rated voltage		1000 V	600 V
Impulse withstand voltage		8000 V	
Protection		IP10	NEMA 1
Increased safety Ex e		693 V 125 A IEC/EN 60079-7 - IM2 II 2 GD Ex eb I/II/IIIC – 600 V 150 A UL 60079-7 - Class I, Zone 1, AEx e II	

Mounting instructions

Rail	TH 35-7.5, TH 35-15
Wire stripping length	17 mm 0.669 in
Tool	Flat screwdriver Ø 6.5 mm Ø 0.256 in
Torque	2.9 Nm ± 0.1 25.7 lb.in ± 0.885

The connecting capacity data for one Rigid: Solid/Stranded, or one Flexible conductor (when applicable) is a mandatory information required by IEC, UL and CSA standards (Copper conductors). All other data are provided as supplementary information only. For more details, please consult our CB, UL or CSA certificates and technical datasheet available on http://www.TE.com

CE, CB, RoHS, USR, CSA, EAC Ex, ATEX, IECEx, BR-Ex e II, Haz Loc, BV, DNV, Rina

Accessories

	Description			Color	Type	Part Number		Pkg qty	Weight (1 pce) g
1	**End stops**	10 mm	0.394 in	Dark grey	BAZH1	1SNK900102R0000		20	24.00
2	**Jumper bars**	2 poles	125 A (IEC)	Orange	JB16-2	1SNK916302R0000		10	10.00
		3 poles	125 A (IEC)		JB16-3	1SNK916303R0000		10	16.00
		4 poles	125 A (IEC)		JB16-4	1SNK916304R0000		10	22.00
		5 poles	125 A (IEC)		JB16-5	1SNK916305R0000		10	28.00
		10 poles	125 A (IEC)		JB16-10	1SNK916310R0000		10	56.60
3	**Circuit separators**	3 mm	0.118 in	Dark grey	CS-R1	1SNK900103R0000		20	5.20
4	**Protecting covers**	16 mm 0.630 in spacing		Transparent	PL16	1SNK900622R0000		10	4.60
5	**Terminal block markers**	Blank marker		White	MG-CPM 13 41791	1SNB041791R0612		1680	0.27
		Blank card			MC812	1SNK160000R0000		22	10.00
					MC812PA	1SNK169999R0000		20	14.00
		Universal wire markers holder		Grey	UMH	1SNK900611R0000		10	0.20

Complete list of accessories is indicated in the terminal block datasheet including end stops.
Some accessories such as jumper bars may modify the terminal block's ratings: Complete information available in the accessories section of the catalog.

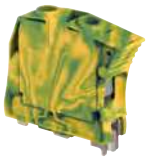

Ground screw clamp terminal blocks

Description		Color	Type	Part Number		Pkg qty	Weight (1 pce) g
Ground	Profile aligned with ZS35	Green-yellow	ZS35-PE	1SNK516150R0000		20	81.80

1SNK161019S0201

Technical data valid for copper conductors only.

ZS50 screw clamp terminal blocks
Feed-through - 16 mm 0.630 in spacing

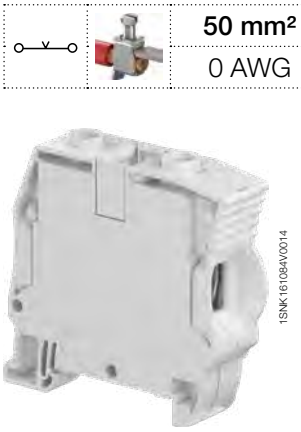

ZS50

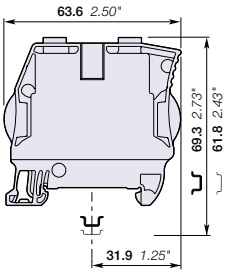

16 mm 0.630 in spacing

	50 mm²
	0 AWG

Description

Combine high performance with compact dimensions:
- Connect conductors up to 50 mm² (CB certified) 0 AWG in just 16 mm 0.630 in spacing,
- Perfectly adapted to solar applications: 1250 V DC (1000 V AC) IEC and 1000 V UL,
- Closed terminal block: no end section needed, optmized rigidity.

Ordering details

Description		Color	Type	Part Number		Pkg qty	Weight (1 pce) g
Feed-through	Closed block	Grey	ZS50	1SNK516011R0000		20	52.90
		Blue	ZS50-BL	1SNK516021R0000		20	52.90
		Yellow	ZS50-YL	1SNK516060R0000		20	52.90
		Red	ZS50-RD	1SNK516063R0000		20	52.90
		Black	ZS50-BK	1SNK516064R0000		20	52.90

Main technical data

Connecting capacity		IEC	UL - CSA
1 conductor per clamp	Rigid: Solid/Stranded	1 ... 50 mm²	18 ... 0 AWG
	Flexible without ferrule	1 ... 50 mm²	
	Flexible with non insulated ferrule	1 ... 50 mm²	18 ... 0 AWG
	Flexible with insulated ferrule	1 ... 50 mm²	18 ... 0 AWG
	Gauge	Dia.11	
2 conductors per clamp	Rigid: Solid/Stranded	1 ... 25 mm²	18 ... 4 AWG
	Flexible without ferrule	1 ... 25 mm²	
	Flexible with twin ferrule	1 ... 16 mm²	18 ... 4 AWG
Rated current / Rated cross section		150 A / 50 mm²	140 A / 0 AWG
Rated short-time withstand current (1s)		6000 A	
Short Circuit Current Rating (with specific conditions)			100 kA
Rated voltage		1000 V	1000 V
Impulse withstand voltage		8000 V	
Protection		IP10	NEMA 1
Increased safety Ex e		880 V 150 A IEC/EN 60079-7 - IM2 II 2 GD Ex eb I/II/IIIC	

Mounting instructions

Rail	TH 35-7.5, TH 35-15
Wire stripping length	17 mm 0.669 in
Tool	Flat screwdriver Ø 6.5 mm Ø 0.256 in
Torque	3 Nm ± 0.50 26.6 lb.in ± 4.43

The connecting capacity data for one Rigid: Solid/Stranded, or one Flexible conductor (when applicable) is a mandatory information required by IEC, UL and CSA standards (Copper conductors). All other data are provided as supplementary information only. For more details, please consult our CB, UL or CSA certificates and technical datasheet available on http://www.TE.com

CE, CB, RoHS, USR, CSA, EAC Ex, ATEX, IECEx, BR-Ex e II, Haz Loc, BV, DNV

Accessories

	Description			Color	Type	Part Number		Pkg qty	Weight (1 pce) g
1	**End stops**	10 mm	0.394 in	Dark grey	BAZH1	1SNK900102R0000		20	24.00
2	**Jumper bars**	2 poles	125 A (IEC)	Orange	JB16-2	1SNK916302R0000		10	10.00
		3 poles	125 A (IEC)		JB16-3	1SNK916303R0000		10	16.00
		4 poles	125 A (IEC)		JB16-4	1SNK916304R0000		10	22.00
		5 poles	125 A (IEC)		JB16-5	1SNK916305R0000		10	28.00
		10 poles	125 A (IEC)		JB16-10	1SNK916310R0000		10	56.60
3	**Terminal block markers**	Blank marker		White	MG-CPM 13 41791	1SNB041791R0612		1680	0.27
		Blank card			MC812	1SNK160000R0000		22	10.00
					MC812PA	1SNK169999R0000		20	14.00
		Universal wire markers holder		Grey	UMH	1SNK900611R0000		10	0.20

Complete list of accessories is indicated in the terminal block datasheet including end stops.
Some accessories such as jumper bars may modify the terminal block's ratings: Complete information available in the accessories section of the catalog.

Ground screw clamp terminal blocks

Description		Color	Type	Part Number		Pkg qty	Weight (1 pce) g
Ground	Profile aligned with ZS50	Green-yellow	ZS50-PE	1SNK516151R0000		20	83.00

1SNK161069S0201

Technical data valid for copper conductors only.

ZS70 screw clamp terminal blocks
Feed-through - 22 mm 0.866 in spacing

ZS70

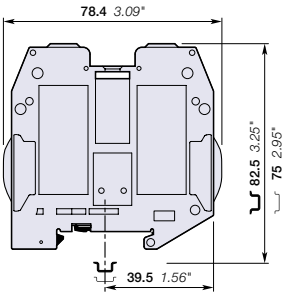

22 mm 0.866 in spacing

70 mm²
00 AWG

Description

Closed terminal block:
- No end section needed,
- Optimized rigidity,
- Perfectly adapted to solar applications: 1250 V DC (1000 V AC) IEC and 1000 V UL.

Ordering details

Description		Color	Type	Part Number		Pkg qty	Weight (1 pce) g
Feed-through	Closed block	Grey	ZS70	1SNK522010R0000		10	158.10
		Blue	ZS70-BL	1SNK522020R0000		10	158.10
		Yellow	ZS70-YL	1SNK522060R0000		10	158.10

Main technical data

Connecting capacity		IEC	UL - CSA
1 conductor per clamp	Rigid: Solid/Stranded	16 ... 95 mm²	4 ... 00 AWG
	Flexible without ferrule	16 ... 70 mm²	
	Flexible with non insulated ferrule	16 ... 50 mm²	
	Flexible with insulated ferrule	16 ... 50 mm²	
	Gauge	B11	
2 conductors per clamp	Rigid: Solid/Stranded	16 ... 35 mm²	4 ... 2 AWG
	Flexible without ferrule	16 ... 35 mm²	
	Flexible with twin ferrule	16 mm²	6 AWG
Rated current / Rated cross section		192 A / 70 mm²	159 A / 00 AWG
Rated short-time withstand current (1s)		8400 A	
Short Circuit Current Rating (with specific conditions)			100 kA
Rated voltage		1000 V	1000 V
Impulse withstand voltage		8000 V	
Protection		IP10	NEMA 1
Increased safety Ex e		693 V 192 A IEC/EN 60079-7 - IM2 II 2 GD Ex eb I/II/IIIC – 600 V 159 A UL 60079-7 - Class I, Zone 1, AEx e II, Ex e II U	

Mounting instructions

Rail		TH 35-7.5, TH 35-15
Wire stripping length		25 mm 0.984 in
Tool		Allen key Ø 6 mm Ø 0.236 in
Torque		6.5 Nm ± 0.5 57.5 lb.in ± 4.43

The connecting capacity data for one Rigid: Solid/Stranded, or one Flexible conductor (when applicable) is a mandatory information required by IEC, UL and CSA standards (Copper conductors). All other data are provided as supplementary information only. For more details, please consult our CB, UL or CSA certificates and technical datasheet available on http://www.TE.com

CE, CB, RoHS, USR CNR, CSA, EAC Ex, ATEX, IECEx, BR-Ex e II, Haz Loc, BV, DNV, Rina

Accessories

1

2

3

	Description			Color	Type	Part Number		Pkg qty	Weight (1 pce) g
1	**End stops**	10 mm	0.394 in	Dark grey	BAZH1	1SNK900102R0000		20	24.00
2	**Jumper bars**	2 poles	192 A (IEC)		JB22-2	1SNK922302R0000		5	27.00
		3 poles	192 A (IEC)		JB22-3	1SNK922303R0000		5	43.30
		5 poles	192 A (IEC)		JB22-5	1SNK922305R0000		5	76.10
		10 poles	192 A (IEC)		JB22-10	1SNK922310R0000		5	157.40
3	**Terminal block markers**	Blank marker		White	MG-CPM 13 41791	1SNB041791R0612		1680	0.27
		Blank card			MC812	1SNK160000R0000		22	10.00
					MC812PA	1SNK169999R0000		20	14.00
		Universal wire markers holder		Grey	UMH	1SNK900611R0000		10	0.20

Complete list of accessories is indicated in the terminal block datasheet including end stops.
Some accessories such as jumper bars may modify the terminal block's ratings: Complete information available in the accessories section of the catalog.

Ground screw clamp terminal blocks

Description		Color	Type	Part Number		Pkg qty	Weight (1 pce) g
Ground	Profile aligned with ZS70	Green-yellow	ZS70-PE	1SNK522150R0000		10	222.00

Technical data valid for copper conductors only.

1SNK161021S0201

3

ZS95 screw clamp terminal blocks
Feed-through - 26 mm 1.024 in spacing

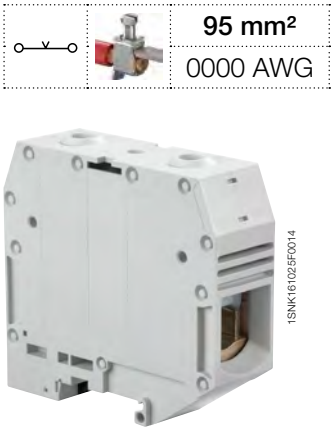

ZS95

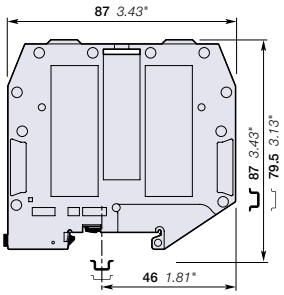

26 mm 1.024 in spacing

Description

Closed terminal block:
- No end section needed,
- Optimized rigidity,
- Perfectly adapted to solar applications: 1250 V DC (1000 V AC) IEC and 1000 V UL.

Ordering details

Description		Color	Type	Part Number		Pkg qty	Weight (1 pce) g
Feed-through	Closed block	Grey	ZS95	1SNK526010R0000		10	215.10
		Blue	ZS95-BL	1SNK526020R0000		10	215.10
		Yellow	ZS95-YL	1SNK526060R0000		10	215.10

Main technical data

Connecting capacity		IEC	UL - CSA
1 conductor per clamp	Rigid: Solid/Stranded	35 ... 120 mm²	2 ... 0000 AWG
	Flexible without ferrule	35 ... 95 mm²	
	Flexible with non insulated ferrule	35 ... 50 mm²	
	Flexible with insulated ferrule	35 ... 50 mm²	
	Gauge	B12	
2 conductors per clamp	Rigid: Solid/Stranded	25 ... 35 mm²	4 ... 2 AWG
	Flexible without ferrule	25 ... 35 mm²	
	Flexible with twin ferrule	16 mm²	6 AWG
Rated current / Rated cross section		232 A / 95 mm²	230 A / 0000 AWG
Rated short-time withstand current (1s)		11400 A	
Short Circuit Current Rating (with specific conditions)			100 kA
Rated voltage		1000 V	1000 V
Impulse withstand voltage		8000 V	
Protection		IP10	NEMA 1
Increased safety Ex e		693 V 232 A IEC/EN 60079-7 - IM2 II 2 GD Ex eb I/II/IIIC – 600 V 230 A UL 60079-7 - Class I, Zone 1, AEx e II	

Mounting instructions

Rail		TH 35-7.5, TH 35-15
Wire stripping length		26 mm 1.024 in
Tool		Allen key Ø 6 mm Ø 0.236 in
Torque		9.25 Nm ± 0.25 81.7 lb.in ± 2.21

The connecting capacity data for one Rigid: Solid/Stranded, or one Flexible conductor (when applicable) is a mandatory information required by IEC, UL and CSA standards (Copper conductors). All other data are provided as supplementary information only. For more details, please consult our CB, UL or CSA certificates and technical datasheet available on http://www.TE.com

CE, CB, RoHS, USR, CSA, EAC Ex, ATEX, IECEx, BR-Ex e II, Haz Loc, BV, DNV, Rina

1
2
3

Accessories

	Description			Color	Type	Part Number		Pkg qty	Weight (1 pce) g
1	**End stops**	10 mm	0.394 in	Dark grey	BAZH1	1SNK900102R0000		20	24.00
2	**Jumper bars**	2 poles	232 A (IEC)		JB26-2	1SNK926302R0000		5	41.20
		3 poles	232 A (IEC)		JB26-3	1SNK926303R0000		5	65.70
		5 poles	232 A (IEC)		JB26-5	1SNK926305R0000		5	115.70
		10 poles	232 A (IEC)		JB26-10	1SNK926310R0000		5	241.50
3	**Terminal block markers**	Blank marker		White	MG-CPM 13 41791	1SNB041791R0612		1680	0.27
		Blank card			MC812	1SNK160000R0000		22	10.00
					MC812PA	1SNK169999R0000		20	14.00
		Universal wire markers holder		Grey	UMH	1SNK900611R0000		10	0.20

Complete list of accessories is indicated in the terminal block datasheet including end stops.
Some accessories such as jumper bars may modify the terminal block's ratings: Complete information available in the accessories section of the catalog.

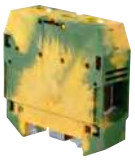

Ground screw clamp terminal blocks

Description		Color	Type	Part Number		Pkg qty	Weight (1 pce) g
Ground	Profile aligned with ZS95	Green-yellow	ZS95-PE	1SNK526150R0000		10	278.00

1SNK161023S0201

Technical data valid for copper conductors only.

ZS150 screw clamp terminal blocks
Feed-through - 31 mm 1.220 in spacing

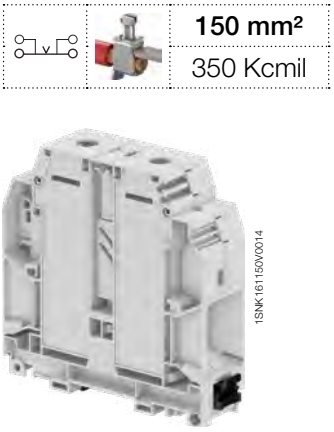

ZS150

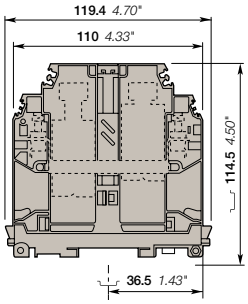

31 mm 1.220 in spacing

150 mm²	
350 Kcmil	

Description

- Perfectly adapted to solar applications : 1500V DC (1000V AC) IEC and 1000V UL,
- Closed terminal block: no end section needed, optimized rigidity,
- Ease your voltage monitoring or distribution with the 2 built-in derivations,
- Use of jumper bars requires the user to cut-out the partition.

Ordering details

Description		Color	Type	Part Number		Pkg qty	Weight (1 pce) g
Feed-through	Closed block with 2 x 10 mm² derivations.	Grey	ZS150	1SNK531010R0000		5	318.00
		Blue	ZS150-BL	1SNK531020R0000		5	318.00
		Yellow	ZS150-YL	1SNK531060R0000		5	318.00

Main technical data

Connecting capacity			IEC	UL	CSA
Main circuit with 1 conductor per clamp	Rigid: Solid/Stranded		35 ... 185 mm²	2 ... 350 Kcmil	2 ... 350 Kcmil
	Flexible without ferrule		50 ... 150 mm²		
	Flexible with insulated ferrule				
	Gauge		B14		
Derivation with 1 conductor per clamp	Rigid: Solid/Stranded		0.5 ... 16 mm²	20 ... 8 AWG	20 ... 8 AWG
	Flexible without ferrule		0.5 ... 10 mm²	20 ... 8 Kcmil	20 ... 8 Kcmil
	Gauge		B6		
Rated current / Rated cross section					
	Main circuit	Copper	309 A / 150 mm²	310 A / 350 Kcmil	310 A / 350 Kcmil
		Aluminium			
	Derivation		57 A / 10 mm²	50 A / 8 AWG	50 A / 8 AWG
Rated short-time withstand current (1s)			18000 A		
Rated voltage	V AC		1000 V	1000 V	1000 V
	V DC		1500		
Impulse withstand voltage			12000 V		
Protection			IP10	NEMA 1	
Increased safety Ex e			1000 V 309 A IEC/EN 60079-7 - IM2 II 2 GD Ex eb I/II/IIIC		

The connecting capacity data for one Rigid: Solid/Stranded, or one Flexible conductor (when applicable) is a mandatory information required by IEC, UL and CSA standards (Copper conductors). All other data are provided as supplementary information only. For more details, please consult our CB, UL or CSA certificates and technical datasheet available on http://www.TE.com

CE, CB, RoHS, USR CNR, CSA, EAC, ATEX, IECEx, BV

Mounting instructions

Rail		TH 35-7.5, TH 35-15
Main circuit		
Wire stripping length		40 mm 1.575 in
Tool		Allen key Ø 8 mm Ø 0.315 in
Torque		20 Nm 177 lb.in
Derivation		
Wire stripping length		12 mm 0.47 in
Tool		Flat screwdriver Ø 4 mm Ø 0.157 in
Torque		1.2 Nm ... 1.4 Nm 10.6 lb.in ... 12.3 lb.in

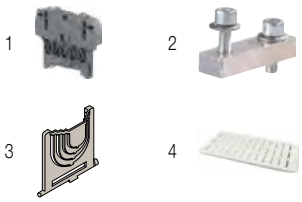

Accessories

	Description			Color	Type	Part Number		Pkg qty	Weight (1 pce) g
1	**End stops**	10 mm	0.394 in	Dark grey	BAZH1	1SNK900102R0000		20	24.00
2	**Jumper bars**	2 poles	309 A (IEC)		BJMI31.2	1SNA206053R0700		1	120.00
		3 poles	309 A (IEC)		BJMI31.3	1SNA206054R0000		1	190.00
3	**Protecting covers**				CPBP1	1SNA399788R1600		20	0.40
4	**Terminal block markers**	Blank card		White	RC1010	1SNA238000R1600		10	1.30
		Blank marker			MG-CPM 13 41791	1SNB041791R0612		1680	0.27
		Blank card			MC812	1SNK160000R0000		22	10.00
					MC812PA	1SNK169999R0000		20	14.00
		Universal wire markers holder		Grey	UMH	1SNK900611R0000		10	0.20

Complete list of accessories is indicated in the terminal block datasheet including end stops.
Some accessories such as jumper bars may modify the terminal block's ratings: Complete information available in the accessories section of the catalog.

Technical data valid for copper conductors only.

ZS240 screw clamp terminal blocks
Feed-through - 36 mm 1.417 in spacing

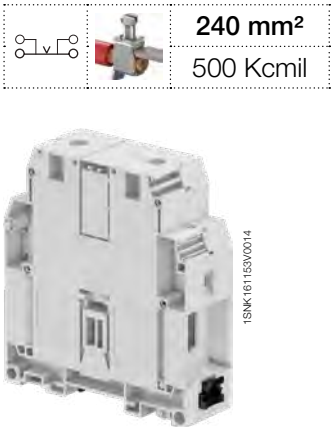

240 mm²
500 Kcmil

ZS240

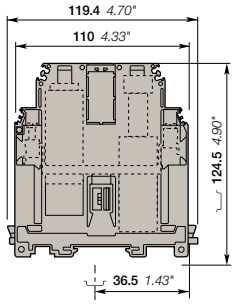

36 mm 1.417 in spacing

Description

- Perfectly adapted to solar applications : 1500V DC (1000V AC) IEC and 1000V UL,
- UL Certified for aluminum cables use - Closed terminal block: no end section needed, optimized rigidity,
- Ease your voltage monitoring or distribution with the 2 built-in derivations,
- Use of jumper bars requires the user to cut-out the partition.

Ordering details

Description		Color	Type	Part Number		Pkg qty	Weight (1 pce) g
Feed-through	Closed block with 2 x 10 mm² derivations.	Grey	ZS240	1SNK536010R0000		5	366.00
		Blue	ZS240-BL	1SNK536020R0000		5	366.00
		Yellow	ZS240-YL	1SNK536060R0000		5	366.00

Main technical data

Connecting capacity			IEC	UL	CSA
Main circuit with 1 conductor per clamp	Rigid: Solid/Stranded		50 ... 300 mm²	0 ... 500 Kcmil	0 ... 500 Kcmil
	Flexible without ferrule		50 ... 240 mm²		
	Flexible with insulated ferrule				
	Gauge		B14		
Derivation with 1 conductor per clamp	Rigid: Solid/Stranded		0.5 ... 16 mm²	20 ... 8 AWG	20 ... 8 AWG
	Flexible without ferrule		0.5 ... 10 mm²	20 ... 8 Kcmil	20 ... 8 Kcmil
	Gauge		B6		
Rated current / Rated cross section					
	Main circuit	Copper	415 A / 240 mm²	380 A / 500 Kcmil	380 A / 500 Kcmil
		Aluminium		271 / 500 Kcmil	271 / 500 Kcmil
	Derivation		57 A / 10 mm²	50 A / 8 AWG	50 A / 8 AWG
Rated short-time withstand current (1s)			28800 A		
Rated voltage	V AC		1000 V	1000 V	1000 V
	V DC		1500		
Impulse withstand voltage			12000 V		
Protection			IP10	NEMA 1	
Increased safety Ex e			1000 V 415 A IEC/EN 60079-7 - IM2 II 2 GD Ex eb I/II/IIIC		

Mounting instructions

Rail		TH 35-7.5, TH 35-15
Main circuit		
Wire stripping length		38 mm 1.496 in
Tool		Allen key Ø 8 mm Ø 0.315 in
Torque		25 Nm 221.3 lb.in
Derivation		
Wire stripping length		12 mm 0.47 in
Tool		Flat screwdriver Ø 4 mm Ø 0.157 in
Torque		1.2 Nm ... 1.4 Nm 10.6 lb.in ... 12.3 lb.in

The connecting capacity data for one Rigid: Solid/Stranded, or one Flexible conductor (when applicable) is a mandatory information required by IEC, UL and CSA standards (Copper conductors). All other data are provided as supplementary information only. For more details, please consult our CB, UL or CSA certificates and technical datasheet available on http://www.TE.com

CE, CB, RoHS, USR CNR, CSA, EAC, ATEX, IECEx, BV

Accessories

	Description			Color	Type	Part Number		Pkg qty	Weight (1 pce) g
1	**End stops**	10 mm	0.394 in	Dark grey	BAZH1	1SNK900102R0000		20	24.00
2	**Jumper bars**	2 poles	415 A (IEC)		BJMI36.2	1SNA206126R2500		1	170.00
		3 poles	415 A (IEC)		BJMI36.3	1SNA206223R0600		1	260.00
3	**Protecting covers**				CPBP2	1SNA399787R0500		20	1.30
4	**Terminal block markers**	Blank card		White	RC1010	1SNA238000R1600		10	1.30
		Blank marker			MG-CPM 13 41791	1SNB041791R0612		1680	0.27
		Blank card			MC812	1SNK160000R0000		22	10.00
					MC812PA	1SNK169999R0000		20	14.00
		Universal wire markers holder		Grey	UMH	1SNK900611R0000		10	0.20

Complete list of accessories is indicated in the terminal block datasheet including end stops.
Some accessories such as jumper bars may modify the terminal block's ratings: Complete information available in the accessories section of the catalog.

1SNK161094S0201

Technical data valid for copper conductors only.

ZS4-PE screw clamp terminal blocks
Ground - 5.2 mm 0.205 in spacing

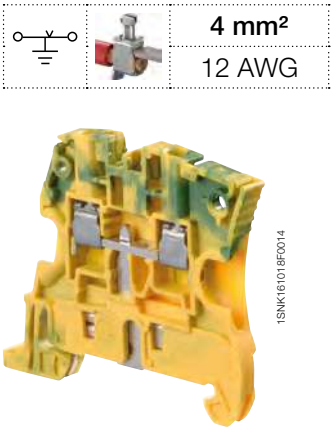

ZS4-PE

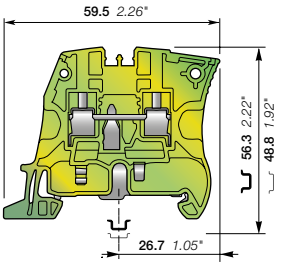

5.2 mm 0.205 in spacing

		4 mm²
		12 AWG

Description

Improve the safety of your installation in the event of a short-circuit thanks to our screwless rail contact:
- Rail contact non operator dependent,
- Performances above the requirements of IEC 60947-7-2 terminal block standard,
- Secured snap on or remove from the rail.

Ordering details

Description		Color	Type	Part Number		Pkg qty	Weight (1 pce) g
Ground	Screwless rail connection	Green-yellow	ZS4-PE	1SNK505150R0000		20	12.10

Main technical data

Connecting capacity		IEC	UL - CSA
1 conductor per clamp	Rigid: Solid/Stranded	0.2 ... 4 mm²	24 ... 12 AWG
	Flexible without ferrule	0.22 ... 4 mm²	
	Flexible with non insulated ferrule	0.22 ... 4 mm²	24 ... 12 AWG
	Flexible with insulated ferrule	0.22 ... 2.5 mm²	24 ... 14 AWG
	Gauge	A3-B3	
Rated cross section		4 mm²	12 AWG
Rated short-time withstand current (1s)		480 A	396 A
Protection		IP20	NEMA 1
Explosive atmosphere classification		IM2 II 2 GD Ex eb I/II/IIIC – Class I, Zone 1, AEx e II, Ex e II U	

Mounting instructions

Rail	TH 35-7.5, TH 35-15
Wire stripping length	10.5 mm 0.412 in
Tool	Flat screwdriver Ø 3.5 mm Ø 0.138 in
Torque	0.6 Nm ± 0.1 5.31 lb.in ± 0.885

The connecting capacity data for one Rigid: Solid/Stranded, or one Flexible conductor (when applicable) is a mandatory information required by IEC, UL and CSA standards (Copper conductors). All other data are provided as supplementary information only. For more details, please consult our CB, UL or CSA certificates and technical datasheet available on http://www.TE.com

CE, CB, RoHS, USR CNR, CSA, EAC Ex, ATEX, IECEx, BR-Ex e II, Haz Loc, BV, DNV, Rina

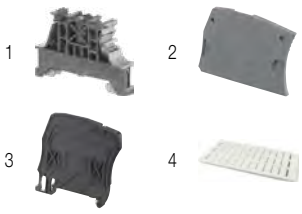

Accessories

	Description			Color	Type	Part Number		Pkg qty	Weight (1 pce) g
1	**End stops**	10 mm	0.394 in	Dark grey	BAM4	1SNK900001R0000		50	14.00
2	**End sections**	2.2 mm	0.087 in	Dark grey	ES4	1SNK505910R0000		20	2.20
3	**Circuit separators**	3 mm	0.118 in	Dark grey	CS-R1	1SNK900103R0000		20	5.20
4	**Terminal block markers**	Blank marker		White	MG-CPM 13 41790	1SNB041790R0512		1960	0.23
		Blank card			MC512	1SNK140000R0000		22	9.00
					MC512PA	1SNK149999R0000		20	10.00
		Universal wire markers holder		Grey	UMH	1SNK900611R0000		10	0.20

Complete list of accessories is indicated in the terminal block datasheet including end stops.
Some accessories such as jumper bars may modify the terminal block's ratings: Complete information available in the accessories section of the catalog.

1SNK161002S0201

Technical data valid for copper conductors only.

ZS6-PE screw clamp terminal blocks
Ground - 6 mm 0.236 in spacing

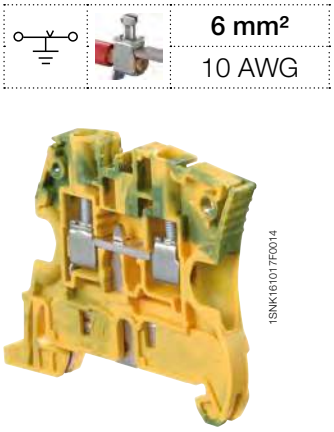

ZS6-PE

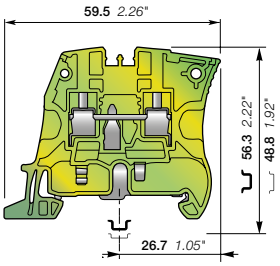

6 mm 0.236 in spacing

		6 mm²
		10 AWG

Description

Improve the safety of your installation in the event of a short-circuit thanks to our screwless rail contact:
- Rail contact non operator dependent,
- Performances above the requirements of IEC 60947-7-2 terminal block standard,
- Secured snap on or remove from the rail.

Ordering details

Description		Color	Type	Part Number		Pkg qty	Weight (1 pce) g
Ground	Screwless rail connection	Green-yellow	ZS6-PE	1SNK506150R0000		20	13.70

Main technical data

Connecting capacity		IEC	UL - CSA
1 conductor per clamp	Rigid: Solid/Stranded	0.2 ... 6 mm²	24 ... 10 AWG
	Flexible without ferrule	0.2 ... 6 mm²	
	Flexible with non insulated ferrule	0.22 ... 4 mm²	24 ... 12 AWG
	Flexible with insulated ferrule	0.22 ... 4 mm²	24 ... 12 AWG
	Gauge	A4-B3	
Rated cross section		6 mm²	10 AWG
Rated short-time withstand current (1s)		720 A	636 A
Protection		IP20	NEMA 1
Explosive atmosphere classification		IM2 II 2 GD Ex eb I/II/IIIC – Class I, Zone 1, AEx e II, Ex e II U	

The connecting capacity data for one Rigid: Solid/Stranded, or one Flexible conductor (when applicable) is a mandatory information required by IEC, UL and CSA standards (Copper conductors). All other data are provided as supplementary information only. For more details, please consult our CB, UL or CSA certificates and technical datasheet available on http://www.TE.com

Mounting instructions

Rail	TH 35-7.5, TH 35-15
Wire stripping length	10.5 mm 0.412 in
Tool	Flat screwdriver Ø 4 mm Ø 0.157 in
Torque	0.85 Nm ± 0.15 7.52 lb.in ± 1.33

CE, CB, RoHS, USR CNR, CSA, EAC Ex, ATEX, IECEx, BR-Ex e II, Haz Loc, BV, DNV, Rina

Accessories

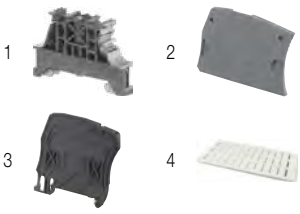

	Description			Color	Type	Part Number		Pkg qty	Weight (1 pce) g
1	**End stops**	10 mm	0.394 in	Dark grey	BAM4	1SNK900001R0000		50	14.00
2	**End sections**	2.2 mm	0.087 in	Dark grey	ES4	1SNK505910R0000		20	2.20
3	**Circuit separators**	3 mm	0.118 in	Dark grey	CS-R1	1SNK900103R0000		20	5.20
4	**Terminal block markers**	Blank marker		White	MG-CPM 13 41791	1SNB041791R0612		1680	0.27
		Blank card			MC612	1SNK150000R0000		22	10.00
					MC612PA	1SNK159999R0000		20	11.00
		Universal wire markers holder		Grey	UMH	1SNK900611R0000		10	0.20

Complete list of accessories is indicated in the terminal block datasheet including end stops.
Some accessories such as jumper bars may modify the terminal block's ratings: Complete information available in the accessories section of the catalog.

1SNK161015S0201

Technical data valid for copper conductors only.

ZS6-3S-PE screw clamp terminal blocks

Ground with 3 connections - 6 mm 0.236 in spacing

6 mm²	
10 AWG	

1SNK161090V0014

ZS6-3S-PE

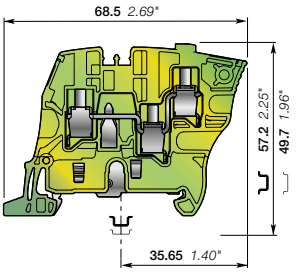

6 mm 0.236 in spacing

Description

Improve the safety of your installation in the event of a short-circuit thanks to our screwless rail contact:
- rail contact non operator dependent, secured snap on or off the rail,
- Same profile as ZS6-3S for aligned marking and identical end section.

Ordering details

Description		Color	Type	Part Number		Pkg qty	Weight (1 pce) g
Ground	Screwless rail connection	Green-yellow	ZS6-3S-PE	1SNK506151R0000		25	16.20

Main technical data

Connecting capacity		IEC	UL - CSA
1 conductor per clamp	Rigid: Solid/Stranded	0.2 ... 6 mm²	24 ... 10 AWG
	Flexible without ferrule	0.22... 6 mm²	
	Flexible with non insulated ferrule	0.22 ... 4 mm²	24 ... 12 AWG
	Flexible with insulated ferrule	0.22 ... 4 mm²	24 ... 12 AWG
	Gauge	A4-B3	
Rated cross section		4 mm²	10 AWG
Maximum cross section		6 mm²	
Rated short-time withstand current (1s)		480 A	636 A
Maximum short-time withstand current (1s)		480 A	
Protection		IP20	NEMA 1
Explosive atmosphere classification		IM2 II 2 GD Ex eb I/II/IIIC – Class I, Zone 1, AEx e II	

The connecting capacity data for one Rigid: Solid/Stranded, or one Flexible conductor (when applicable) is a mandatory information required by IEC, UL and CSA standards (Copper conductors). All other data are provided as supplementary information only. For more details, please consult our CB, UL or CSA certificates and technical datasheet available on http://www.TE.com

CE, CB, RoHS, USR, CSA, EAC Ex, ATEX, IECEx, BR-Ex e II, Haz Loc, BV, DNV

Mounting instructions

Rail		TH 35-7.5, TH 35-15
Wire stripping length		10.5 mm 0.413 in
Tool		Flat screwdriver Ø 4 mm Ø 0.157 in
Torque		0.75 Nm ± 0.05 6.64 lb.in ± 0.443

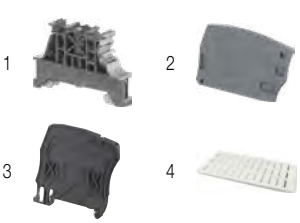

Accessories

	Description			Color	Type	Part Number		Pkg qty	Weight (1 pce) g
1	**End stops**	10 mm	0.394 in	Dark grey	BAM4	1SNK900001R0000		50	14.00
2	**End sections**	2.2 mm	0.087 in	Dark grey	ES6-3S	1SNK505912R0000		20	2.50
3	**Circuit separators**	3 mm	0.118 in	Dark grey	CS-R1	1SNK900103R0000		20	5.20
4	**Terminal block markers**	Blank marker		White	MG-CPM 13 41791	1SNB041791R0612		1680	0.27
		Blank card			MC612	1SNK150000R0000		22	10.00
					MC612PA	1SNK159999R0000		20	11.00
		Universal wire markers holder		Grey	UMH	1SNK900611R0000		10	0.20

Complete list of accessories is indicated in the terminal block datasheet including end stops.
Some accessories such as jumper bars may modify the terminal block's ratings: Complete information available in the accessories section of the catalog.

1SNK161080S0201

Technical data valid for copper conductors only.

ZS6-4S-PE screw clamp terminal blocks

Ground with 4 connections - 6 mm 0.236 in spacing

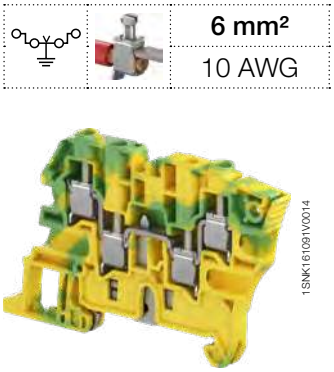

6 mm²	
10 AWG	

1SNK161091V0014

ZS6-4S-PE

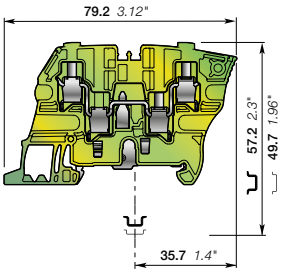

6 mm 0.236 in spacing

Description

Improve the safety of your installation in the event of a short-circuit thanks to our screwless rail contact:
- rail contact non operator dependent, secured snap on or off the rail,
- Same profile as ZS6-4S for aligned marking and identical end section.

Ordering details

Description		Color	Type	Part Number		Pkg qty	Weight (1 pce) g
Ground	Screwless rail connection	Green-yellow	ZS6-4S-PE	1SNK506152R0000		25	19.40

Main technical data

Connecting capacity		IEC	UL - CSA
1 conductor per clamp	Rigid: Solid/Stranded	0.2 ... 6 mm²	24 ... 10 AWG
	Flexible without ferrule	0.22... 6 mm²	
	Flexible with non insulated ferrule	0.22 ... 4 mm²	24 ... 12 AWG
	Flexible with insulated ferrule	0.22 ... 4 mm²	24 ... 12 AWG
	Gauge	A4-B3	
Rated cross section		4 mm²	10 AWG
Maximum cross section		6 mm²	
Rated short-time withstand current (1s)		480 A	636 A
Maximum short-time withstand current (1s)		480 A	
Protection		IP20	NEMA 1
Explosive atmosphere classification		IM2 II 2 GD Ex eb I/II/IIIC – Class I, Zone 1, AEx e II	

Mounting instructions

Rail	TH 35-7.5, TH 35-15
Wire stripping length	10.5 mm 0.413 in
Tool	Flat screwdriver Ø 4 mm Ø 0.157 in
Torque	0.75 Nm ± 0.05 6.64 lb.in ± 0.443

The connecting capacity data for one Rigid: Solid/Stranded, or one Flexible conductor (when applicable) is a mandatory information required by IEC, UL and CSA standards (Copper conductors). All other data are provided as supplementary information only. For more details, please consult our CB, UL or CSA certificates and technical datasheet available on http://www.TE.com

CE, CB, RoHS, USR, CSA, EAC Ex, ATEX, IECEx, BR-Ex e II, Haz Loc, BV, DNV

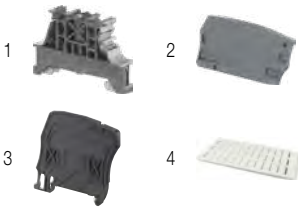

Accessories

	Description			Color	Type	Part Number		Pkg qty	Weight (1 pce) g
1	**End stops**	10 mm	0.394 in	Dark grey	BAM4	1SNK900001R0000		50	14.00
2	**End sections**	2.2 mm	0.087 in	Dark grey	ES6-4S	1SNK505911R0000		20	3.10
3	**Circuit separators**	3 mm	0.118 in	Dark grey	CS-R1	1SNK900103R0000		20	5.20
4	**Terminal block markers**	Blank marker		White	MG-CPM 13 41791	1SNB041791R0612		1680	0.27
		Blank card			MC612	1SNK150000R0000		22	10.00
					MC612PA	1SNK159999R0000		20	11.00
		Universal wire markers holder		Grey	UMH	1SNK900611R0000		10	0.20

Complete list of accessories is indicated in the terminal block datasheet including end stops.
Some accessories such as jumper bars may modify the terminal block's ratings: Complete information available in the accessories section of the catalog.

1SNK161081S0201

Technical data valid for copper conductors only.

ZS10-PE screw clamp terminal blocks
Ground - 8 mm 0.315 in spacing

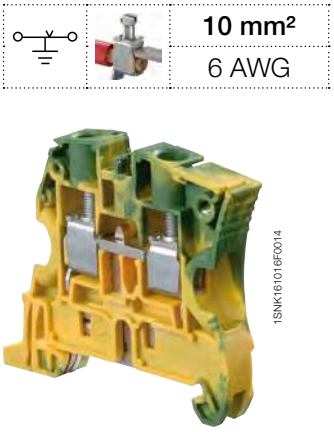

ZS10-PE

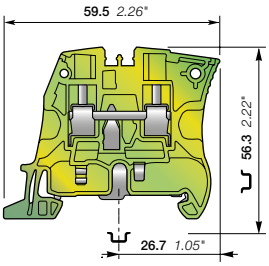

8 mm 0.315 in spacing

	10 mm²
	6 AWG

Description

Improve the safety of your installation in the event of a short-circuit thanks to our screwless rail contact:
- Rail contact non operator dependent,
- Performances above the requirements of IEC 60947-7-2 terminal block standard,
- Secured snap on or remove from the rail.

Ordering details

Description		Color	Type	Part Number		Pkg qty	Weight (1 pce) g
Ground	Screwless rail connection	Green-yellow	ZS10-PE	1SNK508150R0000		20	22.50

Main technical data

Connecting capacity		IEC	UL - CSA
1 conductor per clamp	Rigid: Solid/Stranded	0.5 ... 10 mm²	24 ... 6 AWG
	Flexible without ferrule	0.5 ... 10 mm²	
	Flexible with non insulated ferrule	0.5 ... 10 mm²	24 ... 8 AWG
	Flexible with insulated ferrule	0.5 ... 6 mm²	24 ... 8 AWG
	Gauge	A5-B5	
Rated cross section		10 mm²	6 AWG
Rated short-time withstand current (1s)		1200 A	1596 A
Protection		IP20	NEMA 1
Explosive atmosphere classification		IM2 II 2 GD Ex eb I/II/IIIC – Class I, Zone 1, AEx e II, Ex e II U	

The connecting capacity data for one Rigid: Solid/Stranded, or one Flexible conductor (when applicable) is a mandatory information required by IEC, UL and CSA standards (Copper conductors). All other data are provided as supplementary information only. For more details, please consult our CB, UL or CSA certificates and technical datasheet available on http://www.TE.com

CE, CB, RoHS, USR CNR, CSA, EAC Ex, ATEX, IECEx, BR-Ex e II, Haz Loc, BV, DNV, Rina

Mounting instructions

Rail	TH 35-7.5, TH 35-15
Wire stripping length	12 mm 0.472 in
Tool	Flat screwdriver Ø 4 mm Ø 0.157 in
Torque	1.3 Nm ± 0.3 11.5 lb.in ± 2.65

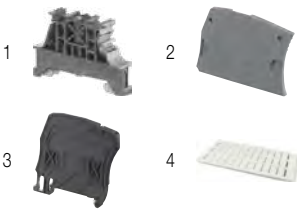

Accessories

	Description			Color	Type	Part Number		Pkg qty	Weight (1 pce) g
1	**End stops**	10 mm	0.394 in	Dark grey	BAM4	1SNK900001R0000		50	14.00
2	**End sections**	2.2 mm	0.087 in	Dark grey	ES4	1SNK505910R0000		20	2.20
3	**Circuit separators**	3 mm	0.118 in	Dark grey	CS-R1	1SNK900103R0000		20	5.20
4	**Terminal block markers**	Blank marker		White	MG-CPM 13 41791	1SNB041791R0612		1680	0.27
		Blank card			MC812	1SNK160000R0000		22	10.00
					MC812PA	1SNK169999R0000		20	14.00
		Universal wire markers holder		Grey	UMH	1SNK900611R0000		10	0.20

Complete list of accessories is indicated in the terminal block datasheet including end stops.
Some accessories such as jumper bars may modify the terminal block's ratings: Complete information available in the accessories section of the catalog.

1SNK161016S0201

Technical data valid for copper conductors only.

ZS16-PE screw clamp terminal blocks
Ground - 10 mm 0.394 in spacing

16 mm²
4 AWG

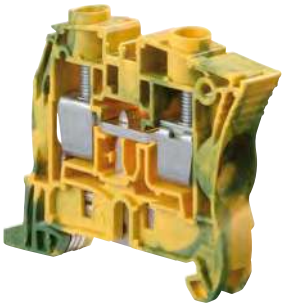

1SNK161019F0014

ZS16-PE

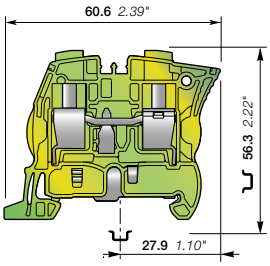

10 mm 0.394 in spacing

Description

Improve the safety of your installation in the event of a short-circuit thanks to our screwless rail contact:
- Rail contact non operator dependent,
- Performances above the requirements of IEC 60947-7-2 terminal block standard,
- Secured snap on or remove from the rail,
- PE.N function available by combining ZS16-PE with ZS16-BL and 2 poles jumper bar JB10-2.

Ordering details

Description		Color	Type	Part Number		Pkg qty	Weight (1 pce) g
Ground	Screwless rail connection	Green-yellow	ZS16-PE	1SNK510150R0000		20	32.00

Main technical data

Connecting capacity		IEC	UL - CSA
1 conductor per clamp	Rigid: Solid/Stranded	0.5 ... 16 mm²	24 ... 4 AWG
	Flexible without ferrule	0.5 ... 16 mm²	
	Flexible with non insulated ferrule	0.5 ... 16 mm²	24 ... 4 AWG
	Flexible with insulated ferrule	0.5 ... 10 mm²	24 ... 8 AWG
	Gauge	A6-B6	
Rated cross section		16 mm²	4 AWG
Rated short-time withstand current (1s)		1920 A	2544 A
Protection		IP20	NEMA 1
Explosive atmosphere classification		IM2 II 2 GD Ex eb I/II/IIIC – Class I, Zone 1, AEx e II, Ex e II U	

Mounting instructions

Rail	TH 35-7.5, TH 35-15
Wire stripping length	13.5 mm 0.531 in
Tool	Flat screwdriver Ø 5.5 mm Ø 0.217 in
Torque	1.8 Nm ± 0.2 15.9 lb.in ± 1.77

The connecting capacity data for one Rigid: Solid/Stranded, or one Flexible conductor (when applicable) is a mandatory information required by IEC, UL and CSA standards (Copper conductors). All other data are provided as supplementary information only. For more details, please consult our CB, UL or CSA certificates and technical datasheet available on http://www.TE.com

CE, CB, RoHS, USR CNR, CSA, EAC Ex, ATEX, IECEx, BR-Ex e II, Haz Loc, BV, DNV, Rina

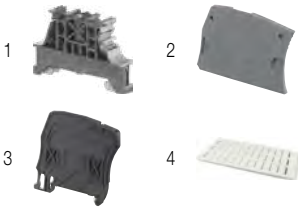

Accessories

	Description			Color	Type	Part Number		Pkg qty	Weight (1 pce) g
1	**End stops**	10 mm	0.394 in	Dark grey	BAM4	1SNK900001R0000		50	14.00
2	**End sections**	2.2 mm	0.087 in	Dark grey	ES4	1SNK505910R0000		20	2.20
3	**Circuit separators**	3 mm	0.118 in	Dark grey	CS-R1	1SNK900103R0000		20	5.20
4	**Terminal block markers**	Blank marker		White	MG-CPM 13 41791	1SNB041791R0612		1680	0.27
		Blank card			MC812	1SNK160000R0000		22	10.00
					MC812PA	1SNK169999R0000		20	14.00
		Universal wire markers holder		Grey	UMH	1SNK900611R0000		10	0.20

Complete list of accessories is indicated in the terminal block datasheet including end stops.
Some accessories such as jumper bars may modify the terminal block's ratings: Complete information available in the accessories section of the catalog.

1SNK161018S0201

Technical data valid for copper conductors only.

ZS25-PE screw clamp terminal blocks
Ground - 12 mm 0.472 in spacing

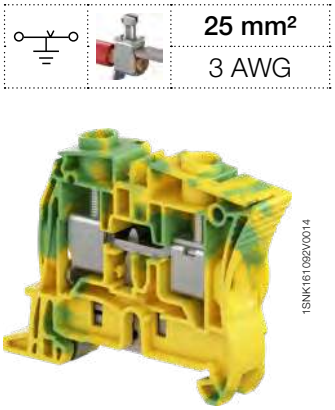

25 mm²	
3 AWG	

ZS25-PE

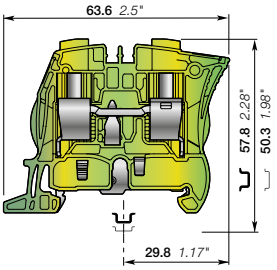

12 mm 0.472 in spacing

Description

Improve the safety of your installation in the event of a short-circuit thanks to our screwless rail contact:
- rail contact non operator dependent, secured snap on or off the rail,
- Same profile as ZS25 for aligned marking and identical end section.

Ordering details

Description		Color	Type	Part Number		Pkg qty	Weight (1 pce) g
Ground	Screwless rail connection	Green-yellow	ZS25-PE	1SNK512150R0000		20	38.00

Main technical data

Connecting capacity		IEC	UL - CSA
1 conductor per clamp	Rigid: Solid/Stranded	0.5 ... 25 mm²	24 ... 3 AWG
	Flexible without ferrule	0.5 ... 25 mm²	
	Flexible with non insulated ferrule	0.5 ... 16 mm²	24 ... 4 AWG
	Flexible with insulated ferrule	0.5 ... 16 mm²	24 ... 8 AWG
	Gauge	A6-B6	
Rated cross section		16 mm²	3 AWG
Maximum cross section		25 mm²	
Rated short-time withstand current (1s)		1920 A	3204 A
Maximum short-time withstand current (1s)		3000 A	
Protection		IP20	NEMA 1
Explosive atmosphere classification		IM2 II 2 GD Ex eb I/II/IIIC – Class I, Zone 1, AEx e II, Ex e II U	

Mounting instructions

Rail	TH 35-7.5, TH 35-15
Wire stripping length	13.5 mm 0.531 in
Tool	Flat screwdriver Ø 5.5 mm Ø 0.217 in
Torque	1.8 Nm ± 0.2 15.9 lb.in ± 1.77

The connecting capacity data for one Rigid: Solid/Stranded, or one Flexible conductor (when applicable) is a mandatory information required by IEC, UL and CSA standards (Copper conductors). All other data are provided as supplementary information only. For more details, please consult our CB, UL or CSA certificates and technical datasheet available on http://www.TE.com

CE, CB, RoHS, USR CNR, CSA, EAC Ex, ATEX, IECEx, BR-Ex e II, Haz Loc, BV, DNV

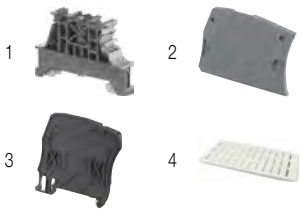

Accessories

	Description			Color	Type	Part Number		Pkg qty	Weight (1 pce) g
1	**End stops**	10 mm	0.394 in	Dark grey	BAM4	1SNK900001R0000		50	14.00
2	**End sections**	2.2 mm	0.087 in	Dark grey	ES4	1SNK505910R0000		20	2.20
3	**Circuit separators**	3 mm	0.118 in	Dark grey	CS-R1	1SNK900103R0000		20	5.20
4	**Terminal block markers**	Blank marker		White	MG-CPM 13 41791	1SNB041791R0612		1680	0.27
		Blank card			MC812	1SNK160000R0000		22	10.00
					MC812PA	1SNK169999R0000		20	14.00
		Universal wire markers holder		Grey	UMH	1SNK900611R0000		10	0.20

Complete list of accessories is indicated in the terminal block datasheet including end stops.
Some accessories such as jumper bars may modify the terminal block's ratings: Complete information available in the accessories section of the catalog.

1SNK161082S0201

Technical data valid for copper conductors only.

ZS35-PE screw clamp terminal blocks
Ground - 16 mm 0.630 in spacing

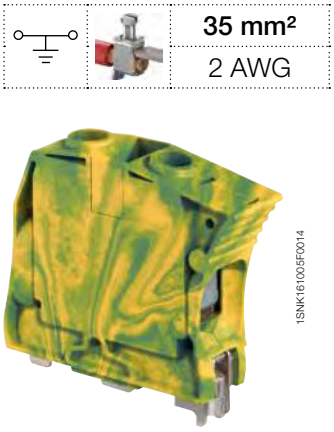

35 mm²	
2 AWG	

Description

Reliable electrical and mechanical contact with the rail that exceeds the requirements of IEC 60947-7-2 terminal block standard.

1SNK161005F0014

ZS35-PE

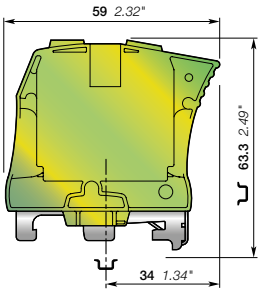

16 mm 0.630 in spacing

Ordering details

Description		Color	Type	Part Number		Pkg qty	Weight (1 pce) g
Ground	Screw rail connection	Green-yellow	ZS35-PE	1SNK516150R0000		20	81.80

Main technical data

Connecting capacity		IEC	UL - CSA
1 conductor per clamp	Rigid: Solid/Stranded	6 ... 35 mm²	10 ... 2 AWG
	Flexible without ferrule	6 ... 35 mm²	
	Flexible with non insulated ferrule	4 ... 35 mm²	10 ... 2 AWG
	Flexible with insulated ferrule	4 ... 35 mm²	10 ... 2 AWG
	Gauge	A9	
Rated cross section		35 mm²	2 AWG
Rated short-time withstand current (1s)		4200 A	4032 A
Protection		IP10	NEMA 1
Explosive atmosphere classification		IM2 II 2 GD Ex eb I/II/IIIC – Class I, Zone 1, AEx e II	

Mounting instructions

Rail		TH 35-7.5, TH 35-15
Wire stripping length		17 mm 0.669 in
Tool Screw clamp		Flat screwdriver Ø 6.5 mm Ø 0.256 in
Rail connection screw		Ø 5.5 Ø 0.217
Torque Screw clamp		2.65 Nm ± 0.15 23.4 lb.in ± 1.33
Rail connection screw		1.6 Nm ± 0.15 Nm 14.2 lb.in ± 1.33 lb.in

The connecting capacity data for one Rigid: Solid/Stranded, or one Flexible conductor (when applicable) is a mandatory information required by IEC, UL and CSA standards (Copper conductors). All other data are provided as supplementary information only. For more details, please consult our CB, UL or CSA certificates and technical datasheet available on http://www.TE.com

CE, CB, RoHS, USR, CSA, EAC Ex, ATEX, IECEx, BR-Ex e II, Haz Loc, BV, DNV, Rina

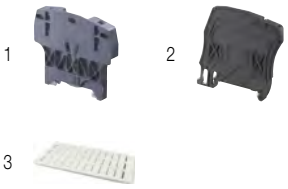

1 2 3

Accessories

	Description			Color	Type	Part Number		Pkg qty	Weight (1 pce) g
1	**End stops**	10 mm	0.394 in	Dark grey	BAZH1	1SNK900102R0000		20	24.00
2	**Circuit separators**	3 mm	0.118 in	Dark grey	CS-R1	1SNK900103R0000		20	5.20
3	**Terminal block markers**	Blank marker		White	MG-CPM 13 41791	1SNB041791R0612		1680	0.27
		Blank card			MC812	1SNK160000R0000		22	10.00
					MC812PA	1SNK169999R0000		20	14.00
		Universal wire markers holder		Grey	UMH	1SNK900611R0000		10	0.20

Complete list of accessories is indicated in the terminal block datasheet including end stops.
Some accessories such as jumper bars may modify the terminal block's ratings: Complete information available in the accessories section of the catalog.

1SNK161020S0201

Technical data valid for copper conductors only.

ZS35-PEN screw clamp terminal blocks

Ground + neutral - 32 mm 1.260 in spacing

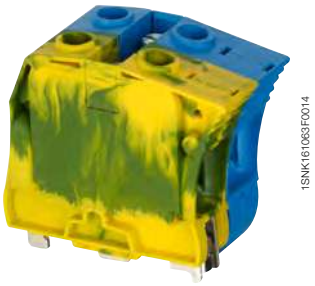

ZS35-PEN

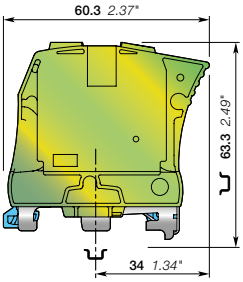

32 mm 1.260 in spacing

Description

Simplify your PE.N connection with ZS35-PE block connected to ZS35-BL through a pre-mounted jumper.

Ordering details

Description	Color	Type	Part Number		Pkg qty	Weight (1 pce) g
Ground + neutral	Green-yellow	ZS35-PEN	1SNK516170R0000		10	236.00

Main technical data

Connecting capacity		IEC	UL - CSA
1 conductor per clamp	Rigid: Solid/Stranded	6 ... 35 mm²	
	Flexible without ferrule	6 ... 35 mm²	
	Flexible with non insulated ferrule	6 ... 35 mm²	10 ... 2 AWG
	Flexible with insulated ferrule	6 ... 35 mm²	
	Gauge	A9	
Rated cross section		35 mm²	
Rated short-time withstand current (1s)		4200 A	
Protection		IP10	NEMA 1

Mounting instructions

Rail	TH 35-7.5, TH 35-15
Wire stripping length	17 mm 0.669 in
Tool Screw clamp	Flat screwdriver Ø 6.5 mm Ø 0.256 in
Rail connection screw	Ø 5.5 Ø 0.217
Torque Screw clamp	2.65 Nm ± 0.15 23.5 lb.in ± 1.33
Rail connection screw	1.6 Nm ± 0.15 Nm 14.2 lb.in ± 1.33 lb.in

The connecting capacity data for one Rigid: Solid/Stranded, or one Flexible conductor (when applicable) is a mandatory information required by IEC, UL and CSA standards (Copper conductors). All other data are provided as supplementary information only. For more details, please consult our CB, UL or CSA certificates and technical datasheet available on http://www.TE.com

CE RoHS EAC

Accessories

	Description			Color	Type	Part Number		Pkg qty	Weight (1 pce) g
1	End stops	10 mm	0.394 in	Dark grey	BAZH1	1SNK900102R0000		20	24.00
2	Terminal block markers	Blank marker		White	MG-CPM 13 41791	1SNB041791R0612		1680	0.27
		Blank card			MC812	1SNK160000R0000		22	10.00
					MC812PA	1SNK169999R0000		20	14.00
		Universal wire markers holder		Grey	UMH	1SNK900611R0000		10	0.20

Complete list of accessories is indicated in the terminal block datasheet including end stops.
Some accessories such as jumper bars may modify the terminal block's ratings: Complete information available in the accessories section of the catalog.

1SNK161047S0201

Technical data valid for copper conductors only.

ZS50-PE screw clamp terminal blocks

Ground - 16 mm 0.630 in spacing

50 mm²
0 AWG

Description

– Reliable electrical and mechanical contact with the rail that exceeds the requirements of the IEC 60947-7-2 terminal block standard.

1SNK161093V0014

ZS50-PE

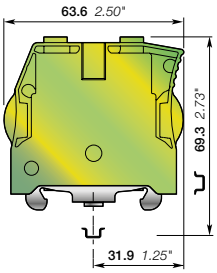

16 mm 0.630 in spacing

Ordering details

Description		Color	Type	Part Number		Pkg qty	Weight (1 pce) g
Ground	Screw rail connection	Green-yellow	ZS50-PE	1SNK516151R0000		20	83.00

Main technical data

Connecting capacity		IEC	UL - CSA
1 conductor per clamp	Rigid: Solid/Stranded	1 … 50 mm²	18 … 0 AWG
	Flexible without ferrule	1 … 50 mm²	
	Flexible with non insulated ferrule	1 … 50 mm²	18 … 0 AWG
	Flexible with insulated ferrule	1 … 50 mm²	18 … 0 AWG
	Gauge	Dia.11	
Rated cross section		50 mm²	0 AWG
Rated short-time withstand current (1s)		6000 A	6420 A
Protection		IP10	NEMA 1
Explosive atmosphere classification		IM2 II 2 GD Ex eb I/II/IIIC – Class I, Zone 1, AEx e II	

Mounting instructions

Rail		TH 35-7.5, TH 35-15
Wire stripping length		17 mm 0.669 in
Tool Screw clamp		Flat screwdriver Ø 6.5 mm Ø 0.256 in
Rail connection screw		Ø 6.5 Ø 0.256
Torque Screw clamp		3 Nm ± 0.50 26.6 lb.in ± 4.43
Rail connection screw		3 Nm ± 0.25 Nm 26.553 lb.in ± 2.21 lb.in

The connecting capacity data for one Rigid: Solid/Stranded, or one Flexible conductor (when applicable) is a mandatory information required by IEC, UL and CSA standards (Copper conductors). All other data are provided as supplementary information only. For more details, please consult our CB, UL or CSA certificates and technical datasheet available on http://www.TE.com

CE, CB, RoHS, USR, CSA, EAC Ex, ATEX, IECEx, BR-Ex e II, Haz Loc, BV, DNV

1 2

Accessories

	Description			Color	Type	Part Number		Pkg qty	Weight (1 pce) g
1	**End stops**	10 mm	0.394 in	Dark grey	BAZH1	1SNK900102R0000		20	24.00
2	**Terminal block markers**	Blank marker		White	MG-CPM 13 41791	1SNB041791R0612		1680	0.27
		Blank card			MC812	1SNK160000R0000		22	10.00
					MC812PA	1SNK169999R0000		20	14.00
		Universal wire markers holder		Grey	UMH	1SNK900611R0000		10	0.20

Complete list of accessories is indicated in the terminal block datasheet including end stops.
Some accessories such as jumper bars may modify the terminal block's ratings: Complete information available in the accessories section of the catalog.

1SNK161070S0201

Technical data valid for copper conductors only.

ZS70-PE screw clamp terminal blocks
Ground - 22 mm 0.866 in spacing

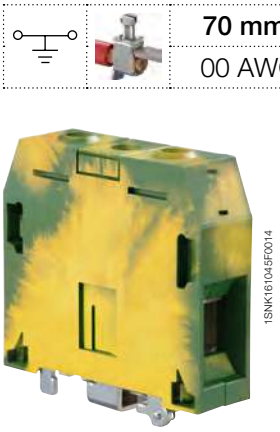

ZS70-PE

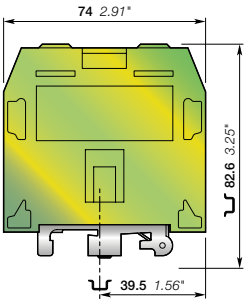

22 mm 0.866 in spacing

	70 mm²
	00 AWG

Description

Reliable electrical and mechanical contact with the rail that exceeds the requirements of IEC 60947-7-2 terminal block standard.

Ordering details

Description		Color	Type	Part Number		Pkg qty	Weight (1 pce) g
Ground	Screw rail connection	Green-yellow	ZS70-PE	1SNK522150R0000		10	222.00

Main technical data

Connecting capacity		IEC	UL - CSA
1 conductor per clamp	Rigid: Solid/Stranded	16 ... 95 mm²	4 ... 00 AWG
	Flexible without ferrule	16 ... 70 mm²	
	Flexible with non insulated ferrule	16 ... 50 mm²	
	Flexible with insulated ferrule	16 ... 50 mm²	
	Gauge	B11	
Rated cross section		70 mm²	00 AWG
Rated short-time withstand current (1s)		8400 A	8088 A
Protection		IP10	NEMA 1
Explosive atmosphere classification		IM2 II 2 GD Ex eb I/II/IIIC – Class I, Zone 1, AEx e II, Ex e II U	

The connecting capacity data for one Rigid: Solid/Stranded, or one Flexible conductor (when applicable) is a mandatory information required by IEC, UL and CSA standards (Copper conductors). All other data are provided as supplementary information only. For more details, please consult our CB, UL or CSA certificates and technical datasheet available on http://www.TE.com

CE, CB, RoHS, USR CNR, CSA, EAC Ex, ATEX, IECEx, BR-Ex e II, Haz Loc, BV, DNV, Rina

Mounting instructions

Rail		TH 35-15
Wire stripping length		25 mm 0.984 in
Tool Screw clamp		Allen key Ø 6 mm Ø 0.236 in
Rail connection screw		Ø 4 Ø 0.158
Torque Screw clamp		6.5 Nm ± 0.5 57.5 lb.in ± 4.43
Rail connection screw		1.9 Nm ± 0.1 Nm 16.82 lb.in ± 0.885 lb.in

1

2

Accessories

	Description			Color	Type	Part Number		Pkg qty	Weight (1 pce) g
1	**End stops**	10 mm	0.394 in	Dark grey	BAZH1	1SNK900102R0000		20	24.00
2	**Terminal block markers**	Blank marker		White	MG-CPM 13 41791	1SNB041791R0612		1680	0.27
		Blank card			MC812	1SNK160000R0000		22	10.00
					MC812PA	1SNK169999R0000		20	14.00
		Universal wire markers holder		Grey	UMH	1SNK900611R0000		10	0.20

Complete list of accessories is indicated in the terminal block datasheet including end stops.
Some accessories such as jumper bars may modify the terminal block's ratings: Complete information available in the accessories section of the catalog.

1SNK161022S0201

Technical data valid for copper conductors only.

ZS95-PE screw clamp terminal blocks
Ground - 26 mm 1.024 in spacing

95 mm²
0000 AWG

Description

Reliable electrical and mechanical contact with the rail that exceeds the requirements of IEC 60947-7-2 terminal block standard.

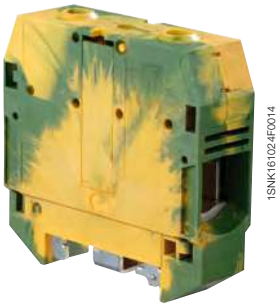

ZS95-PE

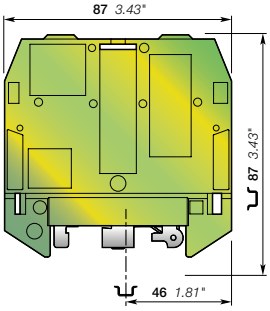

26 mm 1.024 in spacing

Ordering details

Description		Color	Type	Part Number		Pkg qty	Weight (1 pce) g
Ground	Screw rail connection	Green-yellow	ZS95-PE	1SNK526150R0000		10	278.00

Main technical data

Connecting capacity		IEC	UL - CSA
1 conductor per clamp	Rigid: Solid/Stranded	35 ... 120 mm²	2 ... 0000 AWG
	Flexible without ferrule	35 ... 95 mm²	
	Flexible with non insulated ferrule	35 ... 50 mm²	
	Flexible with insulated ferrule	35 ... 50 mm²	
	Gauge	B12	
Rated cross section		95 mm²	0000 AWG
Rated short-time withstand current (1s)		11400 A	12840 A
Protection		IP10	NEMA 1
Explosive atmosphere classification		IM2 II 2 GD Ex eb I/II/IIIC – Class I, Zone 1, AEx e II, Ex e II U	

Mounting instructions

Rail	TH 35-15
Wire stripping length	26 mm 1.024 in
Tool Screw clamp	Allen key Ø 6 mm Ø 0.236 in
Rail connection screw	Ø 4 Ø 0.158
Torque Screw clamp	9.25 Nm ± 0.25 81.7 lb.in ± 2.2
Rail connection screw	1.9 Nm ± 0.1 Nm 16.82 lb.in ± 0.885 lb.in

The connecting capacity data for one Rigid: Solid/Stranded, or one Flexible conductor (when applicable) is a mandatory information required by IEC, UL and CSA standards (Copper conductors). All other data are provided as supplementary information only. For more details, please consult our CB, UL or CSA certificates and technical datasheet available on http://www.TE.com

CE, CB, RoHS, USR CNR, CSA, EAC Ex, ATEX, IECEx, BR-Ex e II, Haz Loc, BV, DNV, Rina

Accessories

	Description			Color	Type	Part Number		Pkg qty	Weight (1 pce) g
1	**End stops**	10 mm	0.394 in	Dark grey	BAZH1	1SNK900102R0000		20	24.00
2	**Terminal block markers**	Blank marker		White	MG-CPM 13 41791	1SNB041791R0612		1680	0.27
		Blank card			MC812	1SNK160000R0000		22	10.00
					MC812PA	1SNK169999R0000		20	14.00
		Universal wire markers holder		Grey	UMH	1SNK900611R0000		10	0.20

Complete list of accessories is indicated in the terminal block datasheet including end stops.
Some accessories such as jumper bars may modify the terminal block's ratings: Complete information available in the accessories section of the catalog.

1SNK161024S0201

Technical data valid for copper conductors only.

ZS4-S screw clamp terminal blocks

Disconnect with blade - 5.2 mm 0.205 in spacing

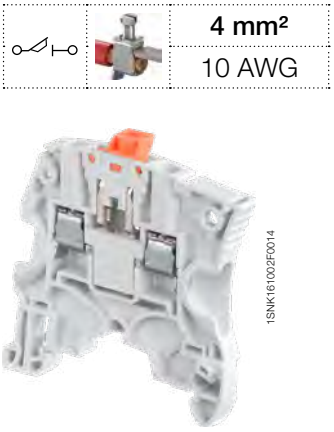

4 mm²	
10 AWG	

ZS4-S

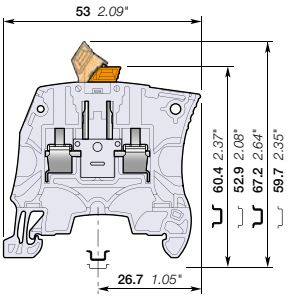

5.2 mm 0.205 in spacing

Description

- Ease your disconnect operations with the disconnect blade operated by hand or with a screwdriver,
- Same profile as ZS4 feed-through terminal block for aligned marking and identical end section use.

Ordering details

Description		Color	Type	Part Number		Pkg qty	Weight (1 pce) g
Disconnect	Profile aligned with ZS4	Grey	ZS4-S	1SNK505310R0000		50	8.60
		Blue	ZS4-S-BL	1SNK505320R0000		50	8.60
		Orange	ZS4-S-OR	1SNK505330R0000		50	8.60

Main technical data

Connecting capacity		IEC	UL - CSA
1 conductor per clamp	Rigid: Solid/Stranded	0.2 ... 4 mm²	24 ... 10 AWG
	Flexible without ferrule	0.2 ... 4 mm²	
	Flexible with non insulated ferrule	0.22 ... 4 mm²	24 ... 10 AWG
	Flexible with insulated ferrule	0.22 ... 2.5 mm²	24 ... 14 AWG
	Gauge	A3-B3	
2 conductors per clamp	Rigid: Solid/Stranded	0.2 ... 1.5 mm²	24 ... 16 AWG
	Flexible without ferrule	0.2 ... 1.5 mm²	
	Flexible with twin ferrule	0.22 ... 1.5 mm²	24 ... 16 AWG
Rated current / Rated cross section		25 A / 4 mm²	25 A / 10 AWG
Rated short-time withstand current (1s)		480 A	
Rated voltage		400 V	150 V
Impulse withstand voltage		6000 V	
Protection		IP20	NEMA 1

Mounting instructions

Rail	TH 35-7.5, TH 35-15
Wire stripping length	10.5 mm 0.412 in
Tool	Flat screwdriver Ø 3.5 mm Ø 0.138 in
Torque	0.6 Nm ± 0.1 5.31 lb.in ± 0.885

Recommendation for best usage: in horizontal assemblies, disconnect terminal blocks should be mounted with fixed foot on top (power side) so that the disconnect knife does not partially close through gravity. Furthermore, as specified per IEC 60947-7-1, disconnect terminal blocks are intended to be used for temporary disconnection at zero potential and at no load.

The connecting capacity data for one Rigid: Solid/Stranded, or one Flexible conductor (when applicable) is a mandatory information required by IEC, UL and CSA standards (Copper conductors). All other data are provided as supplementary information only. For more details, please consult our CB, UL or CSA certificates and technical datasheet available on http://www.TE.com

CE | CB | RoHS | USR CNR | CSA | EAC | BV | DNV | Rina

Accessories

	Description			Color	Type	Part Number		Pkg qty	Weight (1 pce) g
1	**End stops**	10 mm	0.394 in	Dark grey	BAM4	1SNK900001R0000		50	14.00
2	**End sections**	2.2 mm	0.087 in	Dark grey	ES4	1SNK505910R0000		20	2.20
3	**Lateral jumper bars**	2 poles	30 A (IEC)	Grey	PC5-2	1SNA113542R1000		10	1.80
		10 poles	30 A (IEC)		PC5-10	1SNA113544R1200		10	6.00
4	**Circuit separators**	3 mm	0.118 in	Dark grey	CS-R1	1SNK900103R0000		20	5.20
5	**Shield connectors**				SHBS	1SNK900600R0000		20	3.50
6	**Protecting covers**	5.2 mm 0.205 in spacing		Transparent	PL5	1SNK900618R0000		10	1.50
7	**Terminal block markers**	Blank marker		White	MG-CPM 13 41790	1SNB041790R0512		1960	0.23
		Blank card			MC512	1SNK140000R0000		22	9.00
					MC512PA	1SNK149999R0000		20	10.00
		Universal wire markers holder		Grey	UMH	1SNK900611R0000		10	0.20

Complete list of accessories is indicated in the terminal block datasheet including end stops.
Some accessories such as jumper bars may modify the terminal block's ratings: Complete information available in the accessories section of the catalog.

1SNK161010S0201

Technical data valid for copper conductors only.

ZS4-S-T screw clamp terminal blocks

Disconnect with blade - with test socket - 5.2 mm 0.205 in spacing

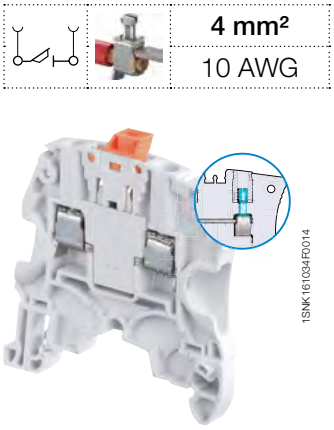

4 mm²
10 AWG

ZS4-S-T

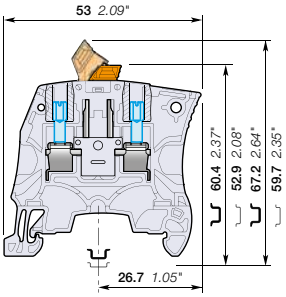

5.2 mm 0.205 in spacing

Description

- Ease your test operations with the 2 built-in test sockets,
- Screwdriver or hand operated disconnect blade,
- Same profile as ZS4 feed-through terminal block for aligned marking and identical end section use.

Ordering details

Description		Color	Type	Part Number		Pkg qty	Weight (1 pce) g
Disconnect	Profile aligned with ZS4, with 2 test sockets DIA 2 mm 0.079 in	Grey	ZS4-S-T2	1SNK505311R0000		50	8.90
		Blue	ZS4-S-T2-BL	1SNK505321R0000		50	8.90
		Orange	ZS4-S-T2-OR	1SNK505331R0000		50	8.90
	Profile aligned with ZS4, with 2 test sockets DIA 2.3 mm 0.091 in	Grey	ZS4-S-T2.3	1SNK505312R0000		50	8.80

Main technical data

Connecting capacity		IEC	UL - CSA
1 conductor per clamp	Rigid: Solid/Stranded	0.2 ... 4 mm²	24 ... 10 AWG
	Flexible without ferrule	0.22 ... 4 mm²	
	Flexible with non insulated ferrule	0.22 ... 4 mm²	24 ... 10 AWG
	Flexible with insulated ferrule	0.22 ... 2.5 mm²	24 ... 14 AWG
	Gauge	A3-B3	
2 conductors per clamp	Rigid: Solid/Stranded	0.2 ... 1.5 mm²	24 ... 16 AWG
	Flexible without ferrule	0.2 ... 1.5 mm²	
	Flexible with twin ferrule	0.22 ... 1.5 mm²	24 ... 16 AWG
Rated current / Rated cross section		25 A / 4 mm²	25 A / 10 AWG
Rated short-time withstand current (1s)		480 A	
Rated voltage		400 V	150 V
Impulse withstand voltage		6000 V	
Protection		IP20	NEMA 1

Mounting instructions

Rail		TH 35-7.5, TH 35-15
Wire stripping length		10.5 mm 0.412 in
Tool		Flat screwdriver Ø 3.5 mm Ø 0.138 in
Torque		0.6 Nm ± 0.1 5.31 lb.in ± 0.885

Recommendation for best usage: in horizontal assemblies, disconnect terminal blocks should be mounted with fixed foot on top (power side) so that the disconnect knife does not partially close through gravity. Furthermore, as specified per IEC 60947-7-1, disconnect terminal blocks are intended to be used for temporary disconnection at zero potential and at no load.

The connecting capacity data for one Rigid: Solid/Stranded, or one Flexible conductor (when applicable) is a mandatory information required by IEC, UL and CSA standards (Copper conductors). All other data are provided as supplementary information only. For more details, please consult our CB, UL or CSA certificates and technical datasheet available on http://www.TE.com

CE RoHS USR CNR CSA EAC

Accessories

	Description			Color	Type	Part Number		Pkg qty	Weight (1 pce) g
1	**End stops**	10 mm	0.394 in	Dark grey	BAM4	1SNK900001R0000		50	14.00
2	**End sections**	2.2 mm	0.087 in	Dark grey	ES4	1SNK505910R0000		20	2.20
3	**Lateral jumper bars**	2 poles	30 A (IEC)	Grey	PC5-2	1SNA113542R1000		10	1.80
		10 poles	30 A (IEC)		PC5-10	1SNA113544R1200		10	6.00
4	**Circuit separators**	3 mm	0.118 in	Dark grey	CS-R1	1SNK900103R0000		20	5.20
5	**Shield connectors**				SHBS	1SNK900600R0000		20	3.50
6	**Protecting covers**	5.2 mm 0.205 in spacing		Transparent	PL5	1SNK900618R0000		10	1.50
7	**Terminal block markers**	Blank marker		White	MG-CPM 13 41790	1SNB041790R0512		1960	0.23
		Blank card			MC512	1SNK140000R0000		22	9.00
					MC512PA	1SNK149999R0000		20	10.00
		Universal wire markers holder		Grey	UMH	1SNK900611R0000		10	0.20

Complete list of accessories is indicated in the terminal block datasheet including end stops.
Some accessories such as jumper bars may modify the terminal block's ratings: Complete information available in the accessories section of the catalog.

1SNK161042S0201

Technical data valid for copper conductors only.

ZS4-S-R1 screw clamp terminal blocks

Disconnect with blade - 6 mm 0.236 in spacing

4 mm²	
10 AWG	

1SNK161003F0014

ZS4-S-R1

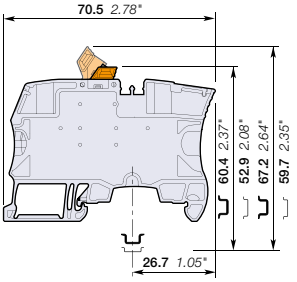

6 mm 0.236 in spacing

Description

- Simplify the alternated distribution thanks to the two jumper channels aligned with ZS4 feed-through terminal blocks,
- Ease your disconnect operations with the disconnect blade operated by hand or with a screwdriver.

Ordering details

Description		Color	Type	Part Number		Pkg qty	Weight (1 pce) g
Disconnect	Profile aligned with ZS4-SF	Grey	ZS4-S-R1	1SNK506310R0000		50	13.20
		Blue	ZS4-S-R1-BL	1SNK506320R0000		50	13.20
		Orange	ZS4-S-R1-OR	1SNK506330R0000		50	13.20

Main technical data

Connecting capacity		IEC	UL - CSA
1 conductor per clamp	Rigid: Solid/Stranded	0.2 ... 4 mm²	24 ... 10 AWG
	Flexible without ferrule	0.22 ... 4 mm²	
	Flexible with non insulated ferrule	0.22 ... 4 mm²	24 ... 12 AWG
	Flexible with insulated ferrule	0.22 ... 4 mm²	24 ... 12 AWG
	Gauge	A3-B3	
2 conductors per clamp	Rigid: Solid/Stranded	0.2 ... 1.5 mm²	24 ... 16 AWG
	Flexible without ferrule	0.2 ... 1.5 mm²	
	Flexible with twin ferrule	0.22 ... 1.5 mm²	24 ... 16 AWG
Rated current / Rated cross section		26 A / 4 mm²	26 A / 10 AWG
Rated short-time withstand current (1s)		480 A	
Rated voltage		400 V	150 V
Impulse withstand voltage		6000 V	
Protection		IP20	NEMA 1

Mounting instructions

Rail		TH 35-7.5, TH 35-15
Wire stripping length		10.5 mm 0.412 in
Tool		Flat screwdriver Ø 3.5 mm Ø 0.138 in
Torque		0.6 Nm ± 0.1 5.31 lb.in ± 0.885

Recommendation for best usage: in horizontal assemblies, disconnect terminal blocks should be mounted with fixed foot on top (power side) so that the disconnect knife does not partially close through gravity. Furthermore, as specified per IEC 60947-7-1, disconnect terminal blocks are intended to be used for temporary disconnection at zero potential and at no load.

The connecting capacity data for one Rigid: Solid/Stranded, or one Flexible conductor (when applicable) is a mandatory information required by IEC, UL and CSA standards (Copper conductors). All other data are provided as supplementary information only. For more details, please consult our CB, UL or CSA certificates and technical datasheet available on http://www.TE.com

CE | CB | RoHS | USR CNR | CSA | EAC | BV | DNV | Rina

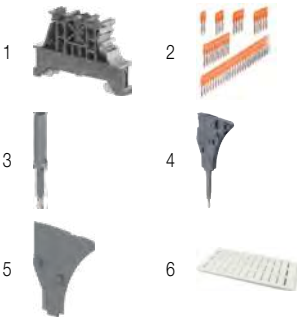

Accessories

	Description			Color	Type	Part Number		Pkg qty	Weight (1 pce) g
1	**End stops**	10 mm	0.394 in	Dark grey	BAM4	1SNK900001R0000		50	14.00
2	**Jumper bars**	2 poles	41 A (IEC)	Orange	JB6-2	1SNK906302R0000		50	1.30
		3 poles	41 A (IEC)		JB6-3	1SNK906303R0000		50	2.10
		4 poles	41 A (IEC)		JB6-4	1SNK906304R0000		50	2.90
		5 poles	41 A (IEC)		JB6-5	1SNK906305R0000		50	3.60
		10 poles	41 A (IEC)		JB6-10	1SNK906310R0000		20	7.40
3	**Test adapters**	For test plugs DIA 2 mm 0.079 in		Dark grey	TP2	1SNK900203R0000		20	1.70
		For test plugs DIA 4 mm 0.157 in			TP4	1SNK900205R0000		20	2.40
4	**Test connectors**	End module, 5.2 mm 0.205 in		Dark grey	TC5-R1	1SNK900201R0000		10	5.20
5	**Spacers**	0.8 mm	0.031 in	Dark grey	ES-TC6	1SNK900105R0000		10	0.80
6	**Terminal block markers**	Blank marker		White	MG-CPM 13 41791	1SNB041791R0612		1680	0.27
		Blank card			MC612	1SNK150000R0000		22	10.00
					MC612PA	1SNK159999R0000		20	11.00
		Universal wire markers holder		Grey	UMH	1SNK900611R0000		10	0.20

Complete list of accessories is indicated in the terminal block datasheet including end stops.
Some accessories such as jumper bars may modify the terminal block's ratings: Complete information available in the accessories section of the catalog.

1SNK161012S0201

Technical data valid for copper conductors only.

ZS4-S-T-R1 screw clamp terminal blocks

Disconnect with blade - with test socket - 6 mm 0.236 in spacing

4 mm²
10 AWG

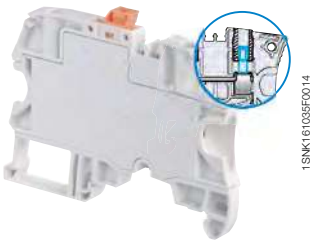

ZS4-S-T-R1

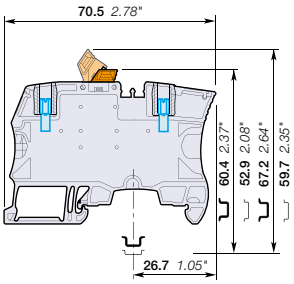

6 mm 0.236 in spacing

Description

- Ease your test operations with the 2 built-in test sockets,
- Screwdriver or hand operated disconnect blade,
- Simplify the alternated distribution thanks to the two jumper channels aligned with ZS4 feed-through terminal blocks.

Ordering details

Description		Color	Type	Part Number		Pkg qty	Weight (1 pce) g
Disconnect	Profile aligned with ZS4-SF, with 2 test sockets DIA 2 mm 0.079 in	Grey	ZS4-S-T2-R1	1SNK506311R0000		50	14.20
		Blue	ZS4-S-T2-R1-BL	1SNK506321R0000		50	14.20
		Orange	ZS4-S-T2-R1-OR	1SNK506331R0000		50	14.20
	Profile aligned with ZS4-SF, with 2 test sockets DIA 2.3 mm 0.091 in	Grey	ZS4-S-T2.3-R1	1SNK506312R0000		50	14.20

Main technical data

Connecting capacity		IEC	UL - CSA
1 conductor per clamp	Rigid: Solid/Stranded	0.2 ... 4 mm²	24 ... 10 AWG
	Flexible without ferrule	0.22 ... 4 mm²	
	Flexible with non insulated ferrule	0.22 ... 4 mm²	24 ... 12 AWG
	Flexible with insulated ferrule	0.22 ... 4 mm²	24 ... 12 AWG
	Gauge	A3-B3	
2 conductors per clamp	Rigid: Solid/Stranded	0.2 ... 1.5 mm²	24 ... 16 AWG
	Flexible without ferrule	0.2 ... 1.5 mm²	
	Flexible with twin ferrule	0.22 ... 1.5 mm²	24 ... 16 AWG
Rated current / Rated cross section		26 A / 4 mm²	26 A / 10 AWG
Rated short-time withstand current (1s)		480 A	
Rated voltage		400 V	150 V
Impulse withstand voltage		6000 V	
Protection		IP20	NEMA 1

Mounting instructions

Rail		TH 35-7.5, TH 35-15
Wire stripping length		10.5 mm 0.412 in
Tool		Flat screwdriver Ø 3.5 mm Ø 0.138 in
Torque		0.6 Nm ± 0.1 5.31 lb.in ± 0.885

Recommendation for best usage: in horizontal assemblies, disconnect terminal blocks should be mounted with fixed foot on top (power side) so that the disconnect knife does not partially close through gravity. Furthermore, as specified per IEC 60947-7-1, disconnect terminal blocks are intended to be used for temporary disconnection at zero potential and at no load.

The connecting capacity data for one Rigid: Solid/Stranded, or one Flexible conductor (when applicable) is a mandatory information required by IEC, UL and CSA standards (Copper conductors). All other data are provided as supplementary information only. For more details, please consult our CB, UL or CSA certificates and technical datasheet available on http://www.TE.com

CE | CB | RoHS | USR CNR | CSA | EAC | BV | DNV | Rina

Accessories

	Description			Color	Type	Part Number		Pkg qty	Weight (1 pce) g
1	**End stops**	10 mm	0.394 in	Dark grey	BAM4	1SNK900001R0000		50	14.00
2	**Jumper bars**	2 poles	41 A (IEC)	Orange	JB6-2	1SNK906302R0000		50	1.30
		3 poles	41 A (IEC)		JB6-3	1SNK906303R0000		50	2.10
		4 poles	41 A (IEC)		JB6-4	1SNK906304R0000		50	2.90
		5 poles	41 A (IEC)		JB6-5	1SNK906305R0000		50	3.60
		10 poles	41 A (IEC)		JB6-10	1SNK906310R0000		20	7.40
3	**Test connectors**	End module, 5.2 mm 0.205 in		Dark grey	TC5-R1	1SNK900201R0000		10	5.20
4	**Spacers**	0.8 mm	0.031 in	Dark grey	ES-TC6	1SNK900105R0000		10	0.80
5	**Terminal block markers**	Blank marker		White	MG-CPM 13 41791	1SNB041791R0612		1680	0.27
		Blank card			MC612	1SNK150000R0000		22	10.00
					MC612PA	1SNK159999R0000		20	11.00
		Universal wire markers holder		Grey	UMH	1SNK900611R0000		10	0.20

Complete list of accessories is indicated in the terminal block datasheet including end stops.
Some accessories such as jumper bars may modify the terminal block's ratings: Complete information available in the accessories section of the catalog.

1SNK161045S0201

Technical data valid for copper conductors only.

ZS6-S screw clamp terminal blocks

Disconnect with blade - 6 mm 0.236 in spacing

6 mm²
10 AWG

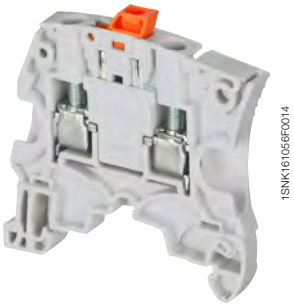

ZS6-S

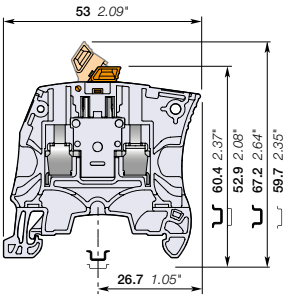

6 mm 0.236 in spacing

Description

- Ease your disconnect operations with the disconnect blade operated by hand or with a screwdriver,
- Same profile as ZS6 feed-through terminal block for aligned marking and identical end section use.

Ordering details

Description		Color	Type	Part Number		Pkg qty	Weight (1 pce) g
Disconnect	Profile aligned with ZS6	Grey	ZS6-S	1SNK506315R0000		50	8.60
		Blue	ZS6-S-BL	1SNK506322R0000		50	8.60

Main technical data

Connecting capacity		IEC	UL - CSA
1 conductor per clamp	Rigid: Solid/Stranded	0.2 ... 6 mm²	24 ... 10 AWG
	Flexible without ferrule	0.22 ... 6 mm²	
	Flexible with non insulated ferrule	0.22 ... 6 mm²	24 ... 12 AWG
	Flexible with insulated ferrule	0.22 ... 4 mm²	24 ... 12 AWG
	Gauge	A4-B3	
2 conductors per clamp	Rigid: Solid/Stranded	0.2 ... 2.5 mm²	24 ... 14 AWG
	Flexible without ferrule	0.22 ... 2.5 mm²	
	Flexible with twin ferrule	0.22 ... 2.5 mm²	24 ... 14 AWG
Rated current / Rated cross section		25 A / 4 mm²	25 A / 10 AWG
Maximum current / Maximum cross section		30 A / 6 mm²	
Rated short-time withstand current (1s)		480 A	
Rated voltage		500 V	300 V
Impulse withstand voltage		6000 V	
Protection		IP20	NEMA 1

Mounting instructions

Rail		TH 35-7.5, TH 35-15
Wire stripping length		10.5 mm 0.412 in
Tool		Flat screwdriver Ø 4 mm Ø 0.157 in
Torque		0.85 Nm ± 0.15 7.52 lb.in ± 1.33

Recommendation for best usage: in horizontal assemblies, disconnect terminal blocks should be mounted with fixed foot on top (power side) so that the disconnect knife does not partially close through gravity. Furthermore, as specified per IEC 60947-7-1, disconnect terminal blocks are intended to be used for temporary disconnection at zero potential and at no load.

The connecting capacity data for one Rigid: Solid/Stranded, or one Flexible conductor (when applicable) is a mandatory information required by IEC, UL and CSA standards (Copper conductors). All other data are provided as supplementary information only. For more details, please consult our CB, UL or CSA certificates and technical datasheet available on http://www.TE.com

CE CB RoHS USR CSA EAC BV DNV

Accessories

	Description			Color	Type	Part Number		Pkg qty	Weight (1 pce) g
1	**End stops**	10 mm	0.394 in	Dark grey	BAM4	1SNK900001R0000		50	14.00
2	**End sections**	2.2 mm	0.087 in	Dark grey	ES4	1SNK505910R0000		20	2.20
3	**Circuit separators**	3 mm	0.118 in	Dark grey	CS-R1	1SNK900103R0000		20	5.20
4	**Shield connectors**				SHBS	1SNK900600R0000		20	3.50
5	**Protecting covers**	6 mm 0.236 in spacing		Transparent	PL6	1SNK900619R0000		10	1.80
6	**Terminal block markers**	Blank marker		White	MG-CPM 13 41791	1SNB041791R0612		1680	0.27
		Blank card			MC612	1SNK150000R0000		22	10.00
					MC612PA	1SNK159999R0000		20	11.00
		Universal wire markers holder		Grey	UMH	1SNK900611R0000		10	0.20

Complete list of accessories is indicated in the terminal block datasheet including end stops.
Some accessories such as jumper bars may modify the terminal block's ratings: Complete information available in the accessories section of the catalog.

1SNK161046S0201

Technical data valid for copper conductors only.

ZS6-S-4S-T screw clamp terminal blocks

Disconnect with blade - with test socket screws - 6 mm 0.236 in spacing

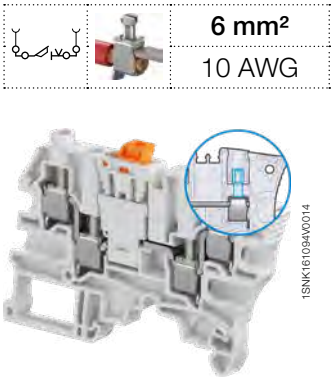

1SNK161094V0014

ZS6-S-4S-T

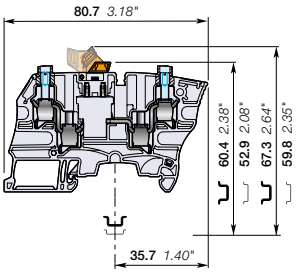

6 mm 0.236 in spacing

	6 mm²
	10 AWG

Description

- Recommended for energy markets and highly demanding applications requiring that only one conductor be connected per clamp,
- Ease your disconnect and test operations with the two built-in test socket screws,
- Simplify the alternated distribution thanks to the jumper channel.

Ordering details

Description		Color	Type	Part Number		Pkg qty	Weight (1 pce) g
Disconnect	with 2 test sockets DIA 2 mm 0,079 in	Grey	ZS6-S-4S-T2	1SNK506316R0000		50	18.40

Main technical data

Connecting capacity		IEC	UL - CSA
1 conductor per clamp	Rigid: Solid/Stranded	0.2 ... 6 mm²	24 ... 10 AWG
	Flexible without ferrule	0.22... 6 mm²	
	Flexible with non insulated ferrule	0.22 ... 4 mm²	24 ... 12 AWG
	Flexible with insulated ferrule	0.22 ... 4 mm²	24 ... 12 AWG
	Gauge	A4-B3	
2 conductors per clamp	Rigid: Solid/Stranded	0.2 ... 2.5 mm²	24 ... 14 AWG
	Flexible without ferrule	0.2 ... 2.5 mm²	
	Flexible with twin ferrule	0.22 ... 2.5 mm²	24 ... 14 AWG
Rated current / Rated cross section		27 A / 4 mm²	28 A / 10 AWG
Rated short-time withstand current (1s)		480 A	
Rated voltage		500 V	300 V
Impulse withstand voltage		6000 V	
Protection		IP20	NEMA 1

Mounting instructions

Rail	TH 35-7.5, TH 35-15
Wire stripping length	10.5 mm 0.413 in
Tool	Flat screwdriver Ø 4 mm Ø 0.157 in
Torque	0.85 Nm ± 0.15 7.52 lb.in ± 1.33

Recommendation for best usage: in horizontal assemblies, disconnect terminal blocks should be mounted with fixed foot on top (power side) so that the disconnect knife does not partially close through gravity. Furthermore, as specified per IEC 60947-7-1, disconnect terminal blocks are intended to be used for temporary disconnection at zero potential and at no load.

The connecting capacity data for one Rigid: Solid/Stranded, or one Flexible conductor (when applicable) is a mandatory information required by IEC, UL and CSA standards (Copper conductors). All other data are provided as supplementary information only. For more details, please consult our CB, UL or CSA certificates and technical datasheet available on http://www.TE.com

CE CB RoHS USR CSA EAC BV DNV

Accessories

	Description			Color	Type	Part Number		Pkg qty	Weight (1 pce) g
1	**End stops**	10 mm	0.394 in	Dark grey	BAM4	1SNK900001R0000		50	14.00
2	**End sections**	2.2 mm	0.087 in	Dark grey	ES6-4S	1SNK505911R0000		20	3.10
3	**Jumper bars**	2 poles	41 A (IEC)	Orange	JB6-2	1SNK906302R0000		50	1.30
		3 poles	41 A (IEC)		JB6-3	1SNK906303R0000		50	2.10
		4 poles	41 A (IEC)		JB6-4	1SNK906304R0000		50	2.90
		5 poles	41 A (IEC)		JB6-5	1SNK906305R0000		50	3.60
		10 poles	41 A (IEC)		JB6-10	1SNK906310R0000		20	7.40
4	**Circuit separators**	3 mm	0.118 in	Dark grey	CS-R1	1SNK900103R0000		20	5.20
5	**Test adapters**	For test plugs DIA 2 mm 0.079 in		Dark grey	TP2	1SNK900203R0000		20	1.70
		For test plugs DIA 4 mm 0.157 in			TP4	1SNK900205R0000		20	2.40
6	**Test connectors**	End module, 5.2 mm 0.205 in		Dark grey	TC5-R1	1SNK900201R0000		10	5.20
7	**Spacers**	0.8 mm	0.031 in	Dark grey	ES-TC6	1SNK900105R0000		10	0.80
8	**Terminal block markers**	Blank marker		White	MG-CPM 13 41791	1SNB041791R0612		1680	0.27
		Blank card			MC612	1SNK150000R0000		22	10.00
					MC612PA	1SNK159999R0000		20	11.00
		Universal wire markers holder		Grey	UMH	1SNK900611R0000		10	0.20

Complete list of accessories is indicated in the terminal block datasheet including end stops.
Some accessories such as jumper bars may modify the terminal block's ratings: Complete information available in the accessories section of the catalog.

1SNK161071S0201

Technical data valid for copper conductors only.

ZS10-S screw clamp terminal blocks

Disconnect with blade - 8 mm 0.315 in spacing

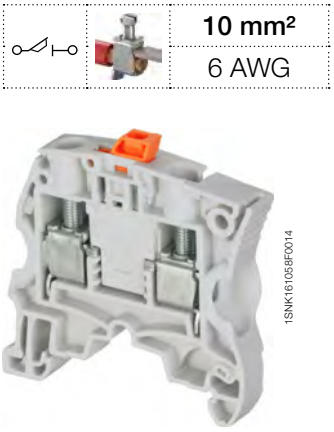

10 mm²	
6 AWG	

1SNK161059F0014

ZS10-S

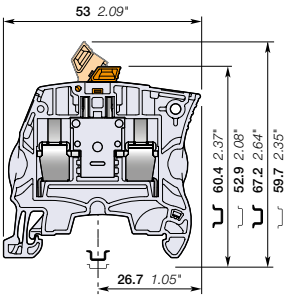

8 mm 0.315 in spacing

Description

- Ease your disconnect operations with the disconnect blade operated by hand or with a screwdriver,
- Same profile as ZS10 feed-through terminal block for aligned marking and identical end section use.

Ordering details

Description		Color	Type	Part Number		Pkg qty	Weight (1 pce) g
Disconnect	Profile aligned with ZS10	Grey	ZS10-S	1SNK508315R0000		50	8.60
		Blue	ZS10-S-BL	1SNK508320R0000		50	8.60

Main technical data

Connecting capacity		IEC	UL - CSA
1 conductor per clamp	Rigid: Solid/Stranded	0.2 ... 10 mm²	24 ... 6 AWG
	Flexible without ferrule	0.22 ... 10 mm²	
	Flexible with non insulated ferrule	0.22 ... 10 mm²	24 ... 12 AWG
	Flexible with insulated ferrule	0.22 ... 6 mm²	24 ... 12 AWG
	Gauge	A5-B5	
2 conductors per clamp	Rigid: Solid/Stranded	0.5 ... 4 mm²	20 ... 12 AWG
	Flexible without ferrule	0.5 ... 4 mm²	
	Flexible with twin ferrule	0.5 ... 4 mm²	20 ... 12 AWG
Rated current / Rated cross section		25 A / 4 mm²	25 A / 6 AWG
Maximum current / Maximum cross section		42 A / 10 mm²	
Rated short-time withstand current (1s)		480 A	
Rated voltage		630 V	300 V
Impulse withstand voltage		6000 V	
Protection		IP20	NEMA 1

Mounting instructions

Rail	TH 35-7.5, TH 35-15
Wire stripping length	12 mm 0.472 in
Tool	Flat screwdriver Ø 4 mm Ø 0.157 in
Torque	1.3 Nm ± 0.3 11.5 lb.in ± 2.65

Recommendation for best usage: in horizontal assemblies, disconnect terminal blocks should be mounted with fixed foot on top (power side) so that the disconnect knife does not partially close through gravity. Furthermore, as specified per IEC 60947-7-1, disconnect terminal blocks are intended to be used for temporary disconnection at zero potential and at no load.

The connecting capacity data for one Rigid: Solid/Stranded, or one Flexible conductor (when applicable) is a mandatory information required by IEC, UL and CSA standards (Copper conductors). All other data are provided as supplementary information only. For more details, please consult our CB, UL or CSA certificates and technical datasheet available on http://www.TE.com

CE CB RoHS USR CSA EAC BV DNV

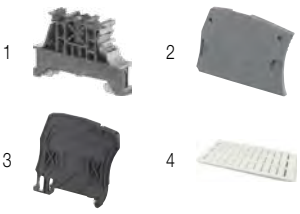

Accessories

	Description			Color	Type	Part Number		Pkg qty	Weight (1 pce) g
1	**End stops**	10 mm	0.394 in	Dark grey	BAM4	1SNK900001R0000		50	14.00
2	**End sections**	2.2 mm	0.087 in	Dark grey	ES4	1SNK505910R0000		20	2.20
3	**Circuit separators**	3 mm	0.118 in	Dark grey	CS-R1	1SNK900103R0000		20	5.20
4	**Terminal block markers**	Blank marker		White	MG-CPM 13 41791	1SNB041791R0612		1680	0.27
		Blank card			MC812	1SNK160000R0000		22	10.00
					MC812PA	1SNK169999R0000		20	14.00
		Universal wire markers holder		Grey	UMH	1SNK900611R0000		10	0.20

Complete list of accessories is indicated in the terminal block datasheet including end stops.
Some accessories such as jumper bars may modify the terminal block's ratings: Complete information available in the accessories section of the catalog.

1SNK161050S0201

Technical data valid for copper conductors only.

ZS4-SP screw clamp terminal blocks

Disconnect with plug - 5.2 mm 0.205 in spacing

4 mm²
10 AWG

Description

- Save time with our screwless component holder plug,
- Same profile as ZS4 feed-through terminal block for aligned marking and identical end section use.

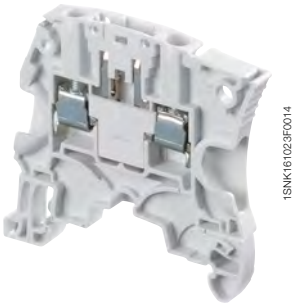

ZS4-SP

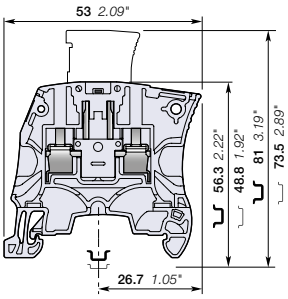

5.2 mm 0.205 in spacing

Ordering details

Description		Color	Type	Part Number		Pkg qty	Weight (1 pce) g
Disconnect	Profile aligned with ZS4, plug delivered separetely	Grey	ZS4-SP	1SNK505313R0000		50	8.20

Main technical data

Connecting capacity		IEC	UL - CSA
1 conductor per clamp	Rigid: Solid/Stranded	0.2 ... 4 mm²	24 ... 10 AWG
	Flexible without ferrule	0.22 ... 4 mm²	
	Flexible with non insulated ferrule	0.22 ... 4 mm²	24 ... 10 AWG
	Flexible with insulated ferrule	0.22 ... 2.5 mm²	24 ... 14 AWG
	Gauge	A3-B3	
2 conductors per clamp	Rigid: Solid/Stranded	0.2 ... 1.5 mm²	24 ... 16 AWG
	Flexible without ferrule	0.2 ... 1.5 mm²	
	Flexible with twin ferrule	0.22 ... 1.5 mm²	24 ... 16 AWG
Rated current / Rated cross section		18 A / 2.5 mm²	18 A / 10 AWG
Rated short-time withstand current (1s)		300 A	
Rated voltage		400 V	150 V
Impulse withstand voltage		6000 V	
Protection		IP20	NEMA 1

Mounting instructions

Rail		TH 35-7.5, TH 35-15
Wire stripping length		10.5 mm 0.412 in
Tool		Flat screwdriver Ø 3.5 mm Ø 0.138 in
Torque		0.6 Nm ± 0.1 5.31 lb.in ± 0.885

The connecting capacity data for one Rigid: Solid/Stranded, or one Flexible conductor (when applicable) is a mandatory information required by IEC, UL and CSA standards (Copper conductors). All other data are provided as supplementary information only. For more details, please consult our CB, UL or CSA certificates and technical datasheet available on http://www.TE.com

CE RoHS USR CNR CSA EAC

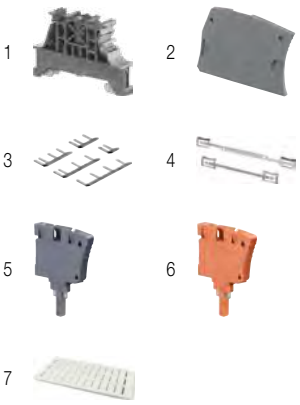

Accessories

	Description			Color	Type	Part Number		Pkg qty	Weight (1 pce) g
1	**End stops**	10 mm	0.394 in	Dark grey	BAM4	1SNK900001R0000		50	14.00
2	**End sections**	2.2 mm	0.087 in	Dark grey	ES4	1SNK505910R0000		20	2.20
3	**Lateral jumper bars**	2 poles	30 A (IEC)	Grey	PC5-2	1SNA113542R1000		10	1.80
		10 poles	30 A (IEC)		PC5-10	1SNA113544R1200		10	6.00
4	**Shield connectors**				SHBS	1SNK900600R0000		20	3.50
5	**Component plugs**	Components in series with circuit		Dark grey	PG5	1SNK900401R0000		20	3.50
6	**Disconnect plugs**	Equipped with linking bar		Orange	PG5-R1	1SNK900402R0000		20	3.50
7	**Terminal block markers**	Blank marker		White	MG-CPM 13 41790	1SNB041790R0512		1960	0.23
		Blank card			MC512	1SNK140000R0000		22	9.00
					MC512PA	1SNK149999R0000		20	10.00
		Universal wire markers holder		Grey	UMH	1SNK900611R0000		10	0.20

Complete list of accessories is indicated in the terminal block datasheet including end stops.
Some accessories such as jumper bars may modify the terminal block's ratings: Complete information available in the accessories section of the catalog.

1SNK161033S0201

Technical data valid for copper conductors only.

ZS4-SP-T2 screw clamp terminal blocks

Disconnect with plug - with test socket - 5.2 mm 0.205 in spacing

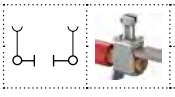

4 mm²
10 AWG

ZS4-SP-T2

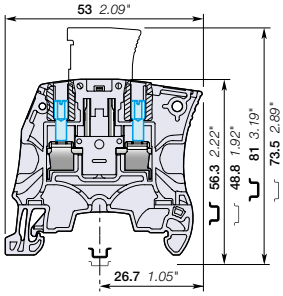

5.2 mm 0.205 in spacing

Description

- Ease your test operations with the 2 built-in test sockets DIA 2 mm 0.079 in,
- Save time with our screwless component holder plug,
- Same profile as ZS4 feed-through terminal block for aligned marking and identical end section use.

Ordering details

Description		Color	Type	Part Number		Pkg qty	Weight (1 pce) g
Disconnect	Profile aligned with ZS4, with 2 test sockets DIA 2 mm 0.079 in, plug delivered separetely	Grey	ZS4-SP-T2	1SNK505314R0000		50	8.40

Main technical data

Connecting capacity		IEC	UL - CSA
1 conductor per clamp	Rigid: Solid/Stranded	0.2 ... 4 mm²	24 ... 10 AWG
	Flexible without ferrule	0.22 ... 4 mm²	
	Flexible with non insulated ferrule	0.22 ... 4 mm²	24 ... 10 AWG
	Flexible with insulated ferrule	0.22 ... 2.5 mm²	24 ... 14 AWG
	Gauge	A3-B3	
2 conductors per clamp	Rigid: Solid/Stranded	0.2 ... 1.5 mm²	24 ... 16 AWG
	Flexible without ferrule	0.2 ... 1.5 mm²	
	Flexible with twin ferrule	0.22 ... 1.5 mm²	24 ... 16 AWG
Rated current / Rated cross section		18 A / 2.5 mm²	18 A / 10 AWG
Rated short-time withstand current (1s)		300 A	
Rated voltage		400 V	150 V
Impulse withstand voltage		6000 V	
Protection		IP20	NEMA 1

Mounting instructions

Rail	TH 35-7.5, TH 35-15
Wire stripping length	10.5 mm 0.412 in
Tool	Flat screwdriver Ø 3.5 mm Ø 0.138 in
Torque	0.6 Nm ± 0.1 5.31 lb.in ± 0.885

The connecting capacity data for one Rigid: Solid/Stranded, or one Flexible conductor (when applicable) is a mandatory information required by IEC, UL and CSA standards (Copper conductors). All other data are provided as supplementary information only. For more details, please consult our CB, UL or CSA certificates and technical datasheet available on http://www.TE.com

CE RoHS USR CNR CSA EAC

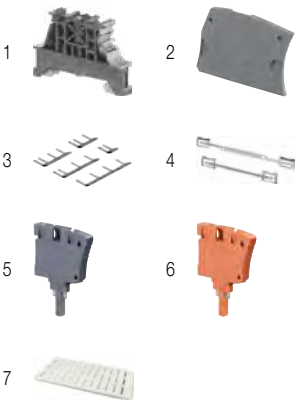

Accessories

	Description			Color	Type	Part Number		Pkg qty	Weight (1 pce) g
1	**End stops**	10 mm	0.394 in	Dark grey	BAM4	1SNK900001R0000		50	14.00
2	**End sections**	2.2 mm	0.087 in	Dark grey	ES4	1SNK505910R0000		20	2.20
3	**Lateral jumper bars**	2 poles	30 A (IEC)	Grey	PC5-2	1SNA113542R1000		10	1.80
		10 poles	30 A (IEC)		PC5-10	1SNA113544R1200		10	6.00
4	**Shield connectors**				SHBS	1SNK900600R0000		20	3.50
5	**Component plugs**	Components in series with circuit		Dark grey	PG5	1SNK900401R0000		20	3.50
6	**Disconnect plugs**	Equipped with linking bar		Orange	PG5-R1	1SNK900402R0000		20	3.50
7	**Terminal block markers**	Blank marker		White	MG-CPM 13 41790	1SNB041790R0512		1960	0.23
		Blank card			MC512	1SNK140000R0000		22	9.00
					MC512PA	1SNK149999R0000		20	10.00
		Universal wire markers holder		Grey	UMH	1SNK900611R0000		10	0.20

Complete list of accessories is indicated in the terminal block datasheet including end stops.
Some accessories such as jumper bars may modify the terminal block's ratings: Complete information available in the accessories section of the catalog.

1SNK161041S0201

Technical data valid for copper conductors only.

ZS4-SP-R1 screw clamp terminal blocks

Disconnect with plug - 6 mm 0.236 in spacing

4 mm²

10 AWG

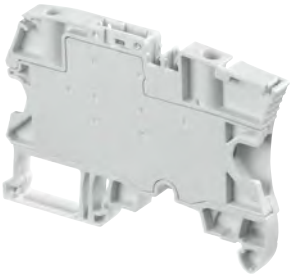

1SNK161022F0014

ZS4-SP-R1

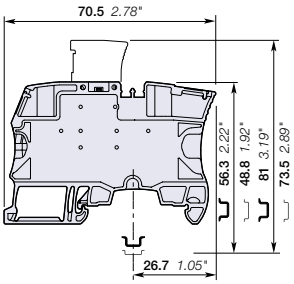

6 mm 0.236 in spacing

Description

- Simplify the alternated distribution between feed-through and disconnect circuits thanks to the two aligned jumper channels,
- Save time with our screwless component holder plug.

Ordering details

Description		Color	Type	Part Number		Pkg qty	Weight (1 pce) g
Disconnect	Profile aligned with ZS4-SF, plug delivered separetely	Grey	ZS4-SP-R1	1SNK506313R0000		50	14.20

Main technical data

Connecting capacity		IEC	UL - CSA
1 conductor per clamp	Rigid: Solid/Stranded	0.2 ... 4 mm²	24 ... 10 AWG
	Flexible without ferrule	0.22 ... 4 mm²	
	Flexible with non insulated ferrule	0.22 ... 4 mm²	24 ... 12 AWG
	Flexible with insulated ferrule	0.22 ... 4 mm²	24 ... 12 AWG
	Gauge	A3-B3	
2 conductors per clamp	Rigid: Solid/Stranded	0.2 ... 1.5 mm²	24 ... 16 AWG
	Flexible without ferrule	0.2 ... 1.5 mm²	
	Flexible with twin ferrule	0.22 ... 1.5 mm²	24 ... 16 AWG
Rated current / Rated cross section		18 A / 2.5 mm²	20 A / 10 AWG
Rated short-time withstand current (1s)		300 A	
Rated voltage		400 V	150 V
Impulse withstand voltage		6000 V	
Protection		IP20	NEMA 1

Mounting instructions

Rail		TH 35-7.5, TH 35-15
Wire stripping length		10.5 mm 0.412 in
Tool		Flat screwdriver Ø 3.5 mm Ø 0.138 in
Torque		0.6 Nm ± 0.1 5.31 lb.in ± 0.885

The connecting capacity data for one Rigid: Solid/Stranded, or one Flexible conductor (when applicable) is a mandatory information required by IEC, UL and CSA standards (Copper conductors). All other data are provided as supplementary information only. For more details, please consult our CB, UL or CSA certificates and technical datasheet available on http://www.TE.com

CE | RoHS | USR CNR | CSA | EAC

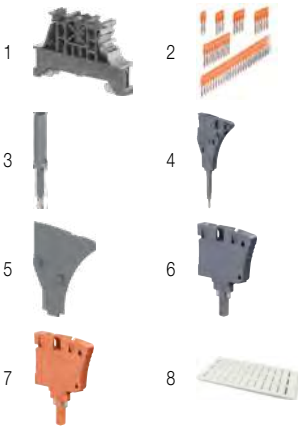

Accessories

	Description			Color	Type	Part Number		Pkg qty	Weight (1 pce) g
1	**End stops**	10 mm	0.394 in	Dark grey	BAM4	1SNK900001R0000		50	14.00
2	**Jumper bars**	2 poles	41 A (IEC)	Orange	JB6-2	1SNK906302R0000		50	1.30
		3 poles	41 A (IEC)		JB6-3	1SNK906303R0000		50	2.10
		4 poles	41 A (IEC)		JB6-4	1SNK906304R0000		50	2.90
		5 poles	41 A (IEC)		JB6-5	1SNK906305R0000		50	3.60
		10 poles	41 A (IEC)		JB6-10	1SNK906310R0000		20	7.40
3	**Test adapters**	For test plugs DIA 2 mm 0.079 in		Dark grey	TP2	1SNK900203R0000		20	1.70
		For test plugs DIA 4 mm 0.157 in			TP4	1SNK900205R0000		20	2.40
4	**Test connectors**	End module, 5.2 mm 0.205 in		Dark grey	TC5-R1	1SNK900201R0000		10	5.20
5	**Spacers**	0.8 mm	0.031 in	Dark grey	ES-TC6	1SNK900105R0000		10	0.80
6	**Component plugs**	Components in series with circuit		Dark grey	PG5	1SNK900401R0000		20	3.50
7	**Disconnect plugs**	Equipped with linking bar		Orange	PG5-R1	1SNK900402R0000		20	3.50
8	**Terminal block markers**	Blank marker		White	MG-CPM 13 41791	1SNB041791R0612		1680	0.27
		Blank card			MC612	1SNK150000R0000		22	10.00
					MC612PA	1SNK159999R0000		20	11.00
		Universal wire markers holder		Grey	UMH	1SNK900611R0000		10	0.20

Complete list of accessories is indicated in the terminal block datasheet including end stops.
Some accessories such as jumper bars may modify the terminal block's ratings: Complete information available in the accessories section of the catalog.

1SNK161039S0201

Technical data valid for copper conductors only.

ZS4-SP-T2-R1 screw clamp terminal blocks

Disconnect with plug - with test socket - 6 mm 0.236 in spacing

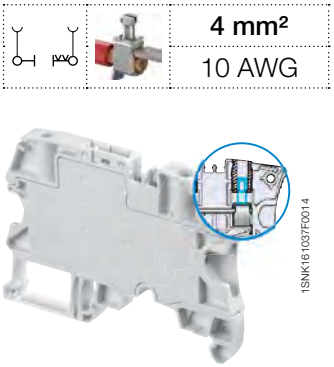

1SNK161037F0014

ZS4-SP-T2-R1

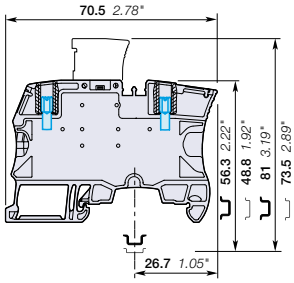

6 mm 0.236 in spacing

4 mm²
10 AWG

Description

- Ease your test operations with the 2 built-in test sockets DIA 2 mm 0.079 in,
- Save time with our screwless component holder plug,
- Simplify the distribution between feed-through and disconnect circuits thanks to the two aligned jumper channels.

Ordering details

Description		Color	Type	Part Number		Pkg qty	Weight (1 pce) g
Disconnect	Profile aligned with ZS4-SF, with 2 test sockets DIA 2 mm 0.079 in, plug delivered separetely	Grey	ZS4-SP-T2-R1	1SNK506314R0000		50	14.20

Main technical data

Connecting capacity		IEC	UL - CSA
1 conductor per clamp	Rigid: Solid/Stranded	0.2 ... 4 mm²	24 ... 10 AWG
	Flexible without ferrule	0.22 ... 4 mm²	
	Flexible with non insulated ferrule	0.22 ... 4 mm²	24 ... 12 AWG
	Flexible with insulated ferrule	0.22 ... 4 mm²	24 ... 12 AWG
	Gauge	A3-B3	
2 conductors per clamp	Rigid: Solid/Stranded	0.2 ... 1.5 mm²	24 ... 16 AWG
	Flexible without ferrule	0.2 ... 1.5 mm²	
	Flexible with twin ferrule	0.22 ... 1.5 mm²	24 ... 16 AWG
Rated current / Rated cross section		18 A / 2.5 mm²	20 A / 10 AWG
Rated short-time withstand current (1s)		300 A	
Rated voltage		400 V	150 V
Impulse withstand voltage		6000 V	
Protection		IP20	NEMA 1

Mounting instructions

Rail		TH 35-7.5, TH 35-15
Wire stripping length		10.5 mm 0.412 in
Tool		Flat screwdriver Ø 3.5 mm Ø 0.138 in
Torque		0.6 Nm ± 0.1 5.31 lb.in ± 0.885

The connecting capacity data for one Rigid: Solid/Stranded, or one Flexible conductor (when applicable) is a mandatory information required by IEC, UL and CSA standards (Copper conductors). All other data are provided as supplementary information only. For more details, please consult our CB, UL or CSA certificates and technical datasheet available on http://www.TE.com

CE RoHS USR CNR CSA EAC

Accessories

	Description			Color	Type	Part Number		Pkg qty	Weight (1 pce) g
1	**End stops**	10 mm	0.394 in	Dark grey	BAM4	1SNK900001R0000		50	14.00
2	**Jumper bars**	2 poles	41 A (IEC)	Orange	JB6-2	1SNK906302R0000		50	1.30
		3 poles	41 A (IEC)		JB6-3	1SNK906303R0000		50	2.10
		4 poles	41 A (IEC)		JB6-4	1SNK906304R0000		50	2.90
		5 poles	41 A (IEC)		JB6-5	1SNK906305R0000		50	3.60
		10 poles	41 A (IEC)		JB6-10	1SNK906310R0000		20	7.40
3	**Test connectors**	End module, 5.2 mm 0.205 in		Dark grey	TC5-R1	1SNK900201R0000		10	5.20
4	**Spacers**	0.8 mm	0.031 in	Dark grey	ES-TC6	1SNK900105R0000		10	0.80
5	**Component plugs**	Components in series with circuit		Dark grey	PG5	1SNK900401R0000		20	3.50
6	**Disconnect plugs**	Equipped with linking bar		Orange	PG5-R1	1SNK900402R0000		20	3.50
7	**Terminal block markers**	Blank marker		White	MG-CPM 13 41791	1SNB041791R0612		1680	0.27
		Blank card			MC612	1SNK150000R0000		22	10.00
					MC612PA	1SNK159999R0000		20	11.00
		Universal wire markers holder		Grey	UMH	1SNK900611R0000		10	0.20

Complete list of accessories is indicated in the terminal block datasheet including end stops.
Some accessories such as jumper bars may modify the terminal block's ratings: Complete information available in the accessories section of the catalog.

1SNK161040S0201

Technical data valid for copper conductors only.

ZS10-SP screw clamp terminal blocks

Disconnect with plug - 8 mm 0.315 in spacing

10 mm²

6 AWG

Description

- Save time with our screwless component holder plug,
- Same profile as ZS10 feed-through terminal block for aligned marking and identical end section use.

1SNK161060F0014

ZS10-SP

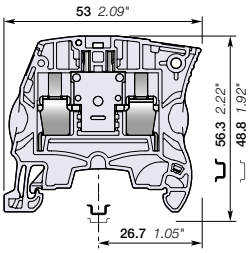

8 mm 0.315 in spacing

Ordering details

Description		Color	Type	Part Number		Pkg qty	Weight (1 pce) g
Disconnect	Profile aligned with ZS10	Grey	ZS10-SP	1SNK508316R0000		50	8.60

Main technical data

Connecting capacity		IEC	UL - CSA
1 conductor per clamp	Rigid: Solid/Stranded	0.2 ... 10 mm²	24 ... 6 AWG
	Flexible without ferrule	0.22 ... 10 mm²	
	Flexible with non insulated ferrule	0.22 ... 10 mm²	24 ... 8 AWG
	Flexible with insulated ferrule	0.22 ... 6 mm²	24 ... 8 AWG
	Gauge	A5-B5	
2 conductors per clamp	Rigid: Solid/Stranded	0.5 ... 4 mm²	20 ... 12 AWG
	Flexible without ferrule	0.5 ... 4 mm²	
	Flexible with twin ferrule	0.5 ... 4 mm²	20 ... 12 AWG
Rated current / Rated cross section		18 A / 2.5 mm²	18 A / 6 AWG
Maximum current / Maximum cross section		18 A / 10 mm²	
Rated short-time withstand current (1s)		300 A	
Rated voltage		630 V	300 V
Impulse withstand voltage		6000 V	
Protection		IP20	NEMA 1

Mounting instructions

Rail	TH 35-7.5, TH 35-15
Wire stripping length	12 mm 0.472 in
Tool	Flat screwdriver Ø 4 mm Ø 0.157 in
Torque	1.3 Nm ± 0.3 11.5 lb.in ± 2.65

The connecting capacity data for one Rigid: Solid/Stranded, or one Flexible conductor (when applicable) is a mandatory information required by IEC, UL and CSA standards (Copper conductors). All other data are provided as supplementary information only. For more details, please consult our CB, UL or CSA certificates and technical datasheet available on http://www.TE.com

CE RoHS USR CSA EAC

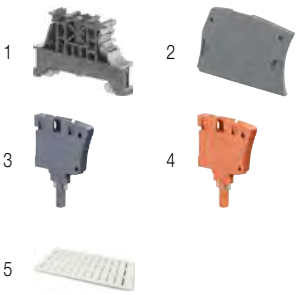

Accessories

	Description			Color	Type	Part Number		Pkg qty	Weight (1 pce) g
1	**End stops**	10 mm	0.394 in	Dark grey	BAM4	1SNK900001R0000		50	14.00
2	**End sections**	2.2 mm	0.087 in	Dark grey	ES4	1SNK505910R0000		20	2.20
3	**Component plugs**	Components in series with circuit		Dark grey	PG5	1SNK900401R0000		20	3.50
4	**Disconnect plugs**	Equipped with linking bar		Orange	PG5-R1	1SNK900402R0000		20	3.50
5	**Terminal block markers**	Blank marker		White	MG-CPM 13 41791	1SNB041791R0612		1680	0.27
		Blank card			MC812	1SNK160000R0000		22	10.00
					MC812PA	1SNK169999R0000		20	14.00
		Universal wire markers holder		Grey	UMH	1SNK900611R0000		10	0.20

Complete list of accessories is indicated in the terminal block datasheet including end stops.
Some accessories such as jumper bars may modify the terminal block's ratings: Complete information available in the accessories section of the catalog.

1SNK161051S0201

Technical data valid for copper conductors only.

Optimize your control circuit protection

Our SNK series fuse terminal blocks offer a full set of features and functions to protect your control circuits with efficiency and reliability.
All terminal blocks complies with the latest evolution of the international standards IEC 60947-7-3 (“Ancillary equipment safety requirements for fuse terminal blocks.”) which fixes precise temperature constraint for short-circuit and overload protection (information in the catalogue pages related to the products).

Qualified for worldwide markets and applications
Eco-designed according to international environmental standards in sustainable development.

Select the right fuse holder for the right application

1 standard applications

The standard fuse holders feature compact dimensions while offering compatibility with 5 x 20 and 5 x 25 mm fuses. double deck terminal blocks allow efficient space reduction for panels with space constraints.

2 Expert for convenient circuit distribution

The expert fuse holders are equipped with two central jumper channels for convenient common distribution and are aligned with feed-through and disconnect terminal blocks. They facilitate alternated potential distribution and reduce wiring.

Additional features for easy trouble shooting and testing

Performant blown fuse indicators

Low leakage current (< 0.5 mA) allows the protection of low current circuits such as PLC’s inputs without any risk of circuit disturbances.
Large voltage range (24/110 V and 110/250 V AC/DC) reduces the number of variants and allows adaptation to worldwide applications (24/110 V range covers North american market needs).

Easy testing

Some terminal blocks are equipped with Dia 2 mm built-in test socket screws for circuit testing while respecting the IP20 touch proof protection.

1
5x20 and 5x25 mm fuses
Compact and high density

2
5x20 and 6.3x32 mm fuses
Easy potential distribution

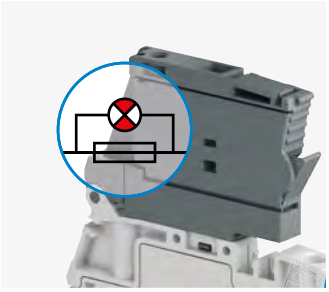

Low leakage current blown fuse indicator.
Large voltage range: (24/110 V and 110/250 V AC and DC)

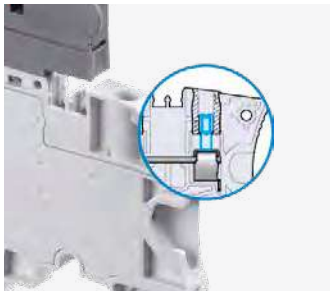

Convenient testing through built in test socket screws

1SNK161085S0201

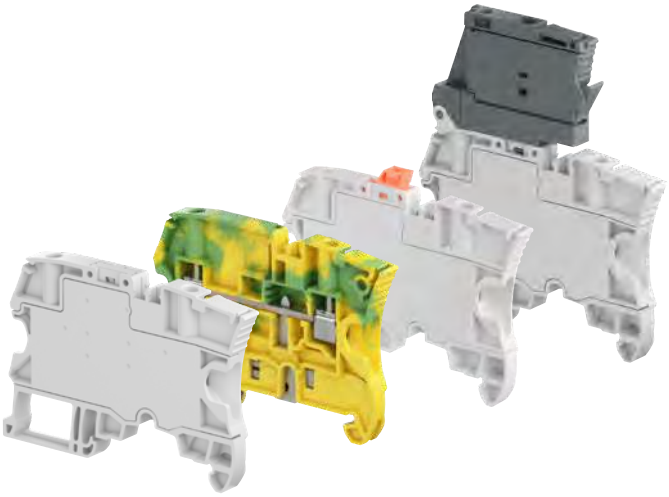

The smart choice for process automation

Large process automation applications typically require the use of a large number of digital or analog signals and sensors. Indeed, marshalling cabinets ensure an important cross wiring function, since the incoming field signal and the channel quantity of the I/O card of the controller (DCS, large PLC's) is always different. They facilitate the maintenance operations and ease the system modifications.

SNK aligned terminal blocks offering:

SNK series now features a full set of aligned terminal blocks matching the marshalling panels typical configurations. Fuse, disconnect, feed-through and ground terminal blocks with identical profile are providing compact and convenient solution. With only 6 mm spacing, two aligned screwless jumper channels, central large marking as well as aligned conductor entries, they are perfectly adapted to alternative potential distribution while still easy to connect.

Typical marshalling configurations

Digital signals

Popular potential distribution via double center channel.

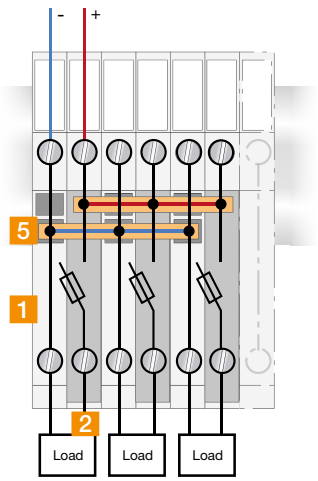

Disconnect functions equipped with test points allow total isolation of circuits, ease circuit testing during start-up, test and maintenance operations.

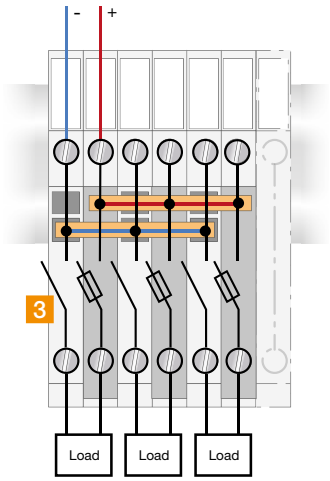

Analog

Potential distribution for analog signals. Ground terminal blocks allow reliable connection of cable shields to the ground sparing the use of external shield bar.

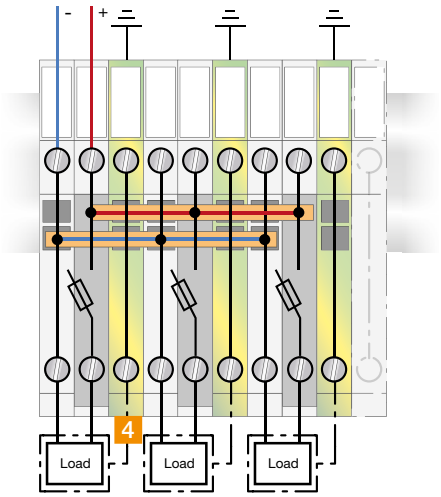

1 ZS4-R2

2 ZS4-SF

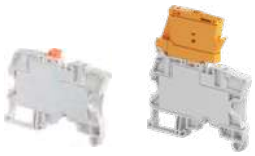

3 ZS4-S-R1 or ZS4-S-R2

4 ZS4-PE-R2

5 JB6-...

1SNK161086S0201

ZS4-SF1 screw clamp terminal blocks

For 5 x 20 and 5 x 25 fuses - 8 mm 0.315 in spacing

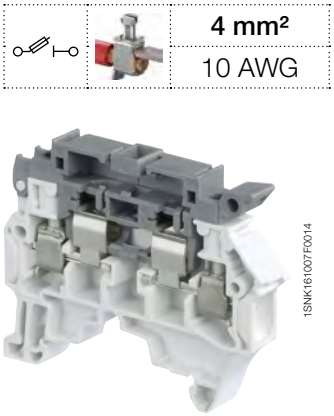

4 mm²	
10 AWG	

Description

Protect your circuit with 5x25 and 5x20 fuse terminal blocks, compliant with IEC 60947-7-3 standard (fuse not supplied with the terminal blocks).

1SNK161007F0014

ZS4-SF1

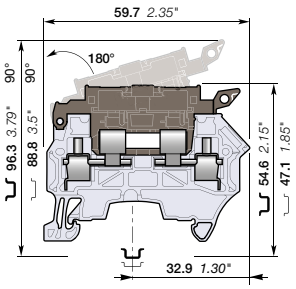

8 mm 0.315 in spacing

Ordering details

Description	Color	Type	Part Number		Pkg qty	Weight (1 pce) g
Fuse	Grey, dark grey	ZS4-SF1	1SNK508410R0000		50	13.30
	Orange, dark grey	ZS4-SF1-OR	1SNK508430R0000		50	13.30

Main technical data

Connecting capacity		IEC	UL - CSA
1 conductor per clamp	Rigid: Solid/Stranded	0.2 ... 4 mm²	24 ... 10 AWG
	Flexible without ferrule	0.22 ... 4 mm²	
	Flexible with non insulated ferrule	0.22 ... 4 mm²	24 ... 12 AWG
	Flexible with insulated ferrule	0.22 ... 4 mm²	24 ... 12 AWG
	Gauge	A3-B3	
2 conductors per clamp	Rigid: Solid/Stranded	0.2 ... 2.5 mm²	24 ... 14 AWG
	Flexible without ferrule	0.2 ... 2.5 mm²	
	Flexible with twin ferrule	0.22 ... 2.5 mm²	24 ... 14 AWG
Rated current / Rated cross section		6.3 A / 4 mm²	10 A / 10 AWG
Rated voltage		630 V	300 V
Impulse withstand voltage		8000 V	
Protection		IP20	NEMA 1

Mounting instructions

Rail	TH 35-7.5, TH 35-15
Wire stripping length	11 mm 0.432 in
Tool	Flat screwdriver Ø 3.5 mm Ø 0.138 in
Torque	0.6 Nm ± 0.1 5.31 lb.in ± 0.885

Separate arrangement		Assembly composed of 1 fuse terminal block in between non fuse terminal blocks	Overload and short-circuit protection	2.5 W
			Exclusive short-circuit protection	4 W
Compound arrangement		Assembly composed of 5 fuse terminal blocks	Overload and short-circuit protection	1.6 W
			Exclusive short-circuit protection	4 W

The connecting capacity data for one Rigid: Solid/Stranded, or one Flexible conductor (when applicable) is a mandatory information required by IEC, UL and CSA standards (Copper conductors). All other data are provided as supplementary information only. For more details, please consult our CB, UL or CSA certificates and technical datasheet available on http://www.TE.com

CE | CB | RoHS | USR CNR | CSA | EAC | BV | DNV | Rina

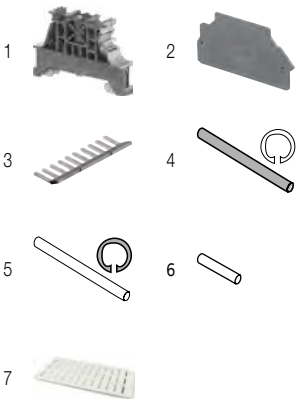

Accessories

	Description			Color	Type	Part Number		Pkg qty	Weight (1 pce) g
1	End stops	10 mm	0.394 in	Dark grey	BAM4	1SNK900001R0000		50	14.00
2	End sections	1.5 mm	0.059 in	Dark grey	ES4-SF	1SNK508960R0000		20	1.80
3	Lateral jumper bars	10 poles	35 A (IEC)	Grey	PC81-10	1SNA173523R1100		10	5.00
4	Assembly rods	2 poles			TGA8	1SNA168672R1100		10	1.00
		3 poles			TGA8	1SNA168673R1200		10	1.50
		4 poles			TGA8	1SNA168674R1300		10	2.00
5	Spring retaining Rings				ANT	1SNA168675R1400		10	
6	Neutral cartridge	5x25			CN5	1SNA179371R1600		10	3.9
7	Terminal block markers	Blank marker		White	MG-CPM 13 41791	1SNB041791R0612		1680	0.27
		Blank card			MC812	1SNK160000R0000		22	10.00
					MC812PA	1SNK169999R0000		20	14.00
		Universal wire markers holder		Grey	UMH	1SNK900611R0000		10	0.20

Complete list of accessories is indicated in the terminal block datasheet including end stops.
Some accessories such as jumper bars may modify the terminal block's ratings: Complete information available in the accessories section of the catalog.

1SNK161011S0201

Technical data valid for copper conductors only.

ZS4-SF1-T screw clamp terminal blocks

For 5 x 20 and 5 x 25 fuses - with test socket - 8 mm 0.315 in spacing

4 mm²
10 AWG

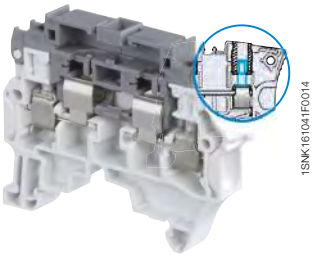

ZS4-SF1-T

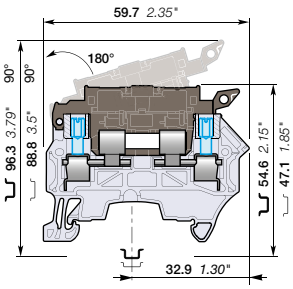

8 mm 0.315 in spacing

Description

- Protect your circuit with 5x25 and 5x20 fuse terminal blocks (fuse not supplied with the terminal blocks),
- Compliant with IEC 60947-7-3 standard,
- With built in test sockets.

Ordering details

Description		Color	Type	Part Number		Pkg qty	Weight (1 pce) g
Fuse	With 2 test sockets DIA 2 mm 0.079 in	Grey, dark grey	ZS4-SF1-T2	1SNK508411R0000		50	13.30

Main technical data

Connecting capacity		IEC	UL - CSA
1 conductor per clamp	Rigid: Solid/Stranded	0.2 ... 4 mm²	24 ... 10 AWG
	Flexible without ferrule	0.22 ... 4 mm²	
	Flexible with non insulated ferrule	0.22 ... 4 mm²	24 ... 12 AWG
	Flexible with insulated ferrule	0.22 ... 4 mm²	24 ... 12 AWG
	Gauge	A3-B3	
2 conductors per clamp	Rigid: Solid/Stranded	0.2 ... 2.5 mm²	24 ... 14 AWG
	Flexible without ferrule	0.2 ... 2.5 mm²	
	Flexible with twin ferrule	0.22 ... 2.5 mm²	24 ... 14 AWG
Rated current / Rated cross section		6.3 A / 4 mm²	10 A / 10 AWG
Rated voltage		630 V	300 V
Impulse withstand voltage		8000 V	
Protection		IP20	NEMA 1

Mounting instructions

Rail		TH 35-7.5, TH 35-15
Wire stripping length		11 mm 0.432 in
Tool		Flat screwdriver Ø 3.5 mm Ø 0.138 in
Torque		0.6 Nm ± 0.1 5.31 lb.in ± 0.885

Separate arrangement		Assembly composed of 1 fuse terminal block in between non fuse terminal blocks	Overload and short-circuit protection	2.5 W
			Exclusive short-circuit protection	4 W
Compound arrangement		Assembly composed of 5 fuse terminal blocks	Overload and short-circuit protection	1.6 W
			Exclusive short-circuit protection	4 W

The connecting capacity data for one Rigid: Solid/Stranded, or one Flexible conductor (when applicable) is a mandatory information required by IEC, UL and CSA standards (Copper conductors). All other data are provided as supplementary information only. For more details, please consult our CB, UL or CSA certificates and technical datasheet available on http://www.TE.com

CE CB RoHS USR CNR CSA EAC BV DNV Rina

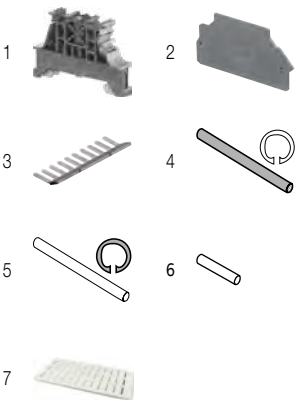

Accessories

	Description			Color	Type	Part Number		Pkg qty	Weight (1 pce) g
1	**End stops**	10 mm	0.394 in	Dark grey	BAM4	1SNK900001R0000		50	14.00
2	**End sections**	1.5 mm	0.059 in	Dark grey	ES4-SF	1SNK508960R0000		20	1.80
3	**Lateral jumper bars**	10 poles	35 A (IEC)	Grey	PC81-10	1SNA173523R1100		10	5.00
4	**Assembly rods**	2 poles			TGA8	1SNA168672R1100		10	1.00
		3 poles			TGA8	1SNA168673R1200		10	1.50
		4 poles			TGA8	1SNA168674R1300		10	2.00
5	**Spring retaining Rings**				ANT	1SNA168675R1400		10	
6	**Neutral cartridge**	5x25			CN5	1SNA179371R1600		10	3.9
7	**Terminal block markers**	Blank marker		White	MG-CPM 13 41791	1SNB041791R0612		1680	0.27
		Blank card			MC812	1SNK160000R0000		22	10.00
					MC812PA	1SNK169999R0000		20	14.00
		Universal wire markers holder		Grey	UMH	1SNK900611R0000		10	0.20

Complete list of accessories is indicated in the terminal block datasheet including end stops.
Some accessories such as jumper bars may modify the terminal block's ratings: Complete information available in the accessories section of the catalog.

1SNK161036S0201

Technical data valid for copper conductors only.

ZS4-SF1-R screw clamp terminal blocks

For 5 x 20 and 5 x 25 fuses - with blown fuse indicator - 8 mm 0.315 in spacing

4 mm²
10 AWG

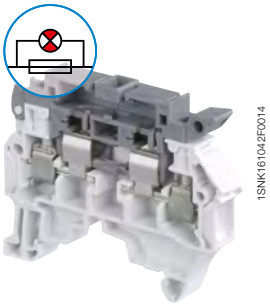

ZS4-SF1-R

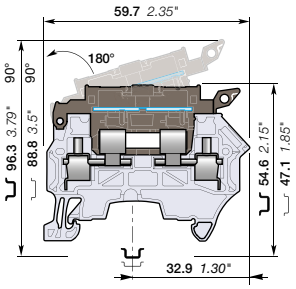

8 mm 0.315 in spacing

Description

- Protect your circuit with 5x25 and 5x20 fuse terminal blocks (fuse not supplied with the terminal blocks),
- Compliant with IEC 60947-7-3 standard,
- Quickly identify the defective circuit thanks to the blown fuse indicator (with leakage current < 0.5 mA).

Ordering details

Description		Color	Type	Part Number		Pkg qty	Weight (1 pce) g
Fuse	With blown fuse indicator 115 ... 250 V AC / DC	Grey, dark grey	ZS4-SF1-R3	1SNK508414R0000		50	13.30
	With blown fuse indicator 24 ... 110 V AC / DC		ZS4-SF1-R1	1SNK508412R0000		50	13.30

Main technical data

Connecting capacity		IEC	UL - CSA
1 conductor per clamp	Rigid: Solid/Stranded	0.2 ... 4 mm²	24 ... 10 AWG
	Flexible without ferrule	0.22 ... 4 mm²	
	Flexible with non insulated ferrule	0.22 ... 4 mm²	24 ... 12 AWG
	Flexible with insulated ferrule	0.22 ... 4 mm²	24 ... 12 AWG
	Gauge	A3-B3	
2 conductors per clamp	Rigid: Solid/Stranded	0.2 ... 2.5 mm²	24 ... 14 AWG
	Flexible without ferrule	0.2 ... 2.5 mm²	
	Flexible with twin ferrule	0.22 ... 2.5 mm²	24 ... 14 AWG
Rated current / Rated cross section		6.3 A / 4 mm²	10 A / 10 AWG
Rated voltage		630 V	300 V
Impulse withstand voltage		8000 V	
Protection		IP20	NEMA 1

Mounting instructions

Rail	TH 35-7.5, TH 35-15
Wire stripping length	11 mm 0.432 in
Tool	Flat screwdriver Ø 3.5 mm Ø 0.138 in
Torque	0.6 Nm ± 0.1 5.31 lb.in ± 0.885

Separate arrangement	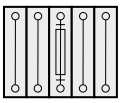	Assembly composed of 1 fuse terminal block in between non fuse terminal blocks	Overload and short-circuit protection	2.5 W
			Exclusive short-circuit protection	4 W
Compound arrangement	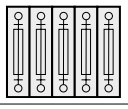	Assembly composed of 5 fuse terminal blocks	Overload and short-circuit protection	1.6 W
			Exclusive short-circuit protection	4 W

The connecting capacity data for one Rigid: Solid/Stranded, or one Flexible conductor (when applicable) is a mandatory information required by IEC, UL and CSA standards (Copper conductors). All other data are provided as supplementary information only. For more details, please consult our CB, UL or CSA certificates and technical datasheet available on http://www.TE.com

CE | CB | RoHS | USR CNR | CSA | EAC | BV | DNV | Rina

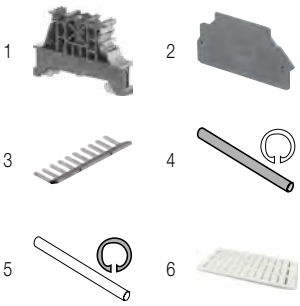

Accessories

	Description			Color	Type	Part Number		Pkg qty	Weight (1 pce) g
1	**End stops**	10 mm	0.394 in	Dark grey	BAM4	1SNK900001R0000		50	14.00
2	**End sections**	1.5 mm	0.059 in	Dark grey	ES4-SF	1SNK508960R0000		20	1.80
3	**Lateral jumper bars**	10 poles	35 A (IEC)	Grey	PC81-10	1SNA173523R1100		10	5.00
4	**Assembly rods**	2 poles			TGA8	1SNA168672R1100		10	1.00
		3 poles			TGA8	1SNA168673R1200		10	1.50
		4 poles			TGA8	1SNA168674R1300		10	2.00
5	**Spring retaining Rings**				ANT	1SNA168675R1400		10	
6	**Terminal block markers**	Blank marker		White	MG-CPM 13 41791	1SNB041791R0612		1680	0.27
		Blank card			MC812	1SNK160000R0000		22	10.00
					MC812PA	1SNK169999R0000		20	14.00
		Universal wire markers holder		Grey	UMH	1SNK900611R0000		10	0.20

Complete list of accessories is indicated in the terminal block datasheet including end stops.
Some accessories such as jumper bars may modify the terminal block's ratings: Complete information available in the accessories section of the catalog.

1SNK161034S0201

Technical data valid for copper conductors only.

ZS4-SF1-R screw clamp terminal blocks

For 5 x 20 and 5 x 25 fuses - with blown fuse indicator and test sockets - 8 mm 0.315 in spacing

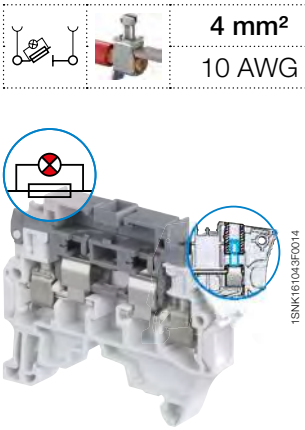

ZS4-SF1-R

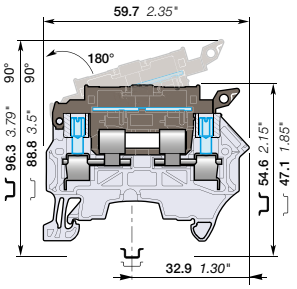

8 mm 0.315 in spacing

	4 mm²
	10 AWG

Description

- Protect your circuit with 5x25 and 5x20 fuse terminal blocks (fuse not supplied with the terminal blocks),
- Compliant with IEC 60947-7-3 standard,
- Ease the test with built-in test sockets,
- Quickly identify the defective circuit thanks to the blown fuse indicator (with leakage current < 0.5 mA).

Ordering details

Description		Color	Type	Part Number		Pkg qty	Weight (1 pce) g
Fuse	With blown fuse indicator 115 ... 250 V AC / DC and 2 test sockets DIA 2 mm 0.079 in	Grey, dark grey	ZS4-SF1-R4	1SNK508415R0000		50	13.30
	With blown fuse indicator 24 ... 110 V AC / DC and 2 test sockets DIA 2 mm 0.079 in		ZS4-SF1-R2	1SNK508413R0000		50	13.30

Main technical data

Connecting capacity		IEC	UL - CSA
1 conductor per clamp	Rigid: Solid/Stranded	0.2 ... 4 mm²	24 ... 10 AWG
	Flexible without ferrule	0.22 ... 4 mm²	
	Flexible with non insulated ferrule	0.22 ... 4 mm²	24 ... 12 AWG
	Flexible with insulated ferrule	0.22 ... 4 mm²	24 ... 12 AWG
	Gauge	A3-B3	
2 conductors per clamp	Rigid: Solid/Stranded	0.2 ... 2.5 mm²	24 ... 14 AWG
	Flexible without ferrule	0.2 ... 2.5 mm²	
	Flexible with twin ferrule	0.22 ... 2.5 mm²	24 ... 14 AWG
Rated current / Rated cross section		6.3 A / 4 mm²	10 A / 10 AWG
Rated voltage		630 V	300 V
Impulse withstand voltage		8000 V	
Protection		IP20	NEMA 1

Mounting instructions

Rail	TH 35-7.5, TH 35-15
Wire stripping length	11 mm 0.432 in
Tool	Flat screwdriver Ø 3.5 mm Ø 0.138 in
Torque	0.6 Nm ± 0.1 5.31 lb.in ± 0.885

Separate arrangement	Assembly composed of 1 fuse terminal block in between non fuse terminal blocks	Overload and short-circuit protection	2.5 W
		Exclusive short-circuit protection	4 W
Compound arrangement	Assembly composed of 5 fuse terminal blocks	Overload and short-circuit protection	1.6 W
		Exclusive short-circuit protection	4 W

The connecting capacity data for one Rigid: Solid/Stranded, or one Flexible conductor (when applicable) is a mandatory information required by IEC, UL and CSA standards (Copper conductors). All other data are provided as supplementary information only. For more details, please consult our CB, UL or CSA certificates and technical datasheet available on http://www.TE.com

CE, CB, RoHS, USR CNR, CSA, EAC, BV, DNV, Rina

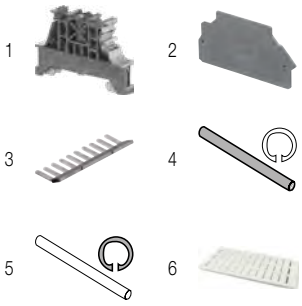

Accessories

	Description			Color	Type	Part Number		Pkg qty	Weight (1 pce) g
1	**End stops**	10 mm	0.394 in	Dark grey	BAM4	1SNK900001R0000		50	14.00
2	**End sections**	1.5 mm	0.059 in	Dark grey	ES4-SF	1SNK508960R0000		20	1.80
3	**Lateral jumper bars**	10 poles	35 A (IEC)	Grey	PC81-10	1SNA173523R1100		10	5.00
4	**Assembly rods**	2 poles			TGA8	1SNA168672R1100		10	1.00
		3 poles			TGA8	1SNA168673R1200		10	1.50
		4 poles			TGA8	1SNA168674R1300		10	2.00
5	**Spring retaining Rings**				ANT	1SNA168675R1400		10	
6	**Terminal block markers**	Blank marker		White	MG-CPM 13 41791	1SNB041791R0612		1680	0.27
		Blank card			MC812	1SNK160000R0000		22	10.00
					MC812PA	1SNK169999R0000		20	14.00
		Universal wire markers holder		Grey	UMH	1SNK900611R0000		10	0.20

Complete list of accessories is indicated in the terminal block datasheet including end stops.
Some accessories such as jumper bars may modify the terminal block's ratings: Complete information available in the accessories section of the catalog.

1SNK161035S0201

Technical data valid for copper conductors only.

ZS4-R1 screw clamp terminal blocks
Feed-through - 8 mm 0.315 in spacing

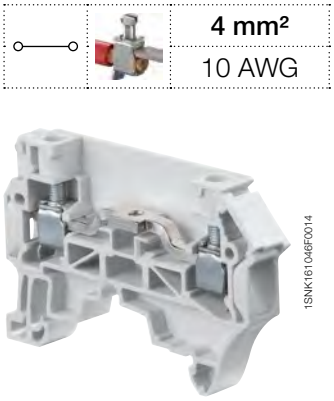

ZS4-R1

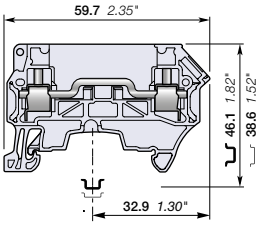

8 mm 0.315 in spacing

	4 mm²
	10 AWG

Description

Simplify the alternated feed-through and fuse circuits operations:

– With the same profile as the ZS4-SF1, the wiring of the alternated feed-through and fuse circuits is easier.

Ordering details

Description		Color	Type	Part Number		Pkg qty	Weight (1 pce) g
Feed-through	Profile aligned with ZS4-SF1	Grey	ZS4-R1	1SNK508013R0000		50	11.00

Main technical data

Connecting capacity		IEC	UL - CSA
1 conductor per clamp	Rigid: Solid/Stranded	0.2 ... 4 mm²	24 ... 10 AWG
	Flexible without ferrule	0.22 ... 4 mm²	
	Flexible with non insulated ferrule	0.22 ... 4 mm²	24 ... 12 AWG
	Flexible with insulated ferrule	0.22 ... 4 mm²	24 ... 12 AWG
	Gauge	A3-B3	
2 conductors per clamp	Rigid: Solid/Stranded	0.2 ... 2.5 mm²	24 ... 14 AWG
	Flexible without ferrule	0.2 ... 2.5 mm²	
	Flexible with twin ferrule	0.22 ... 2.5 mm²	24 ... 14 AWG
Rated current / Rated cross section		24 A / 2.5 mm²	26 A / 10 AWG
Rated short-time withstand current (1s)		300 A	
Short Circuit Current Rating (with specific conditions)			
Rated voltage		800 V	300 V
Impulse withstand voltage		6000 V	
Protection		IP20	NEMA 1

Mounting instructions

Rail	TH 35-7.5, TH 35-15
Wire stripping length	11 mm 0.432 in
Tool	Flat screwdriver Ø 3.5 mm Ø 0.138 in
Torque	0.6 Nm ± 0.1 5.31 lb.in ± 0.885

The connecting capacity data for one Rigid: Solid/Stranded, or one Flexible conductor (when applicable) is a mandatory information required by IEC, UL and CSA standards (Copper conductors). All other data are provided as supplementary information only. For more details, please consult our CB, UL or CSA certificates and technical datasheet available on http://www.TE.com

CE, CB, RoHS, USR CNR, CSA, EAC, BV, DNV, Rina

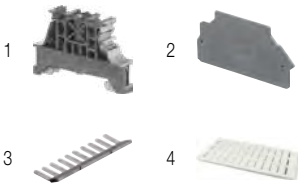

Accessories

	Description			Color	Type	Part Number		Pkg qty	Weight (1 pce) g
1	**End stops**	10 mm	0.394 in	Dark grey	BAM4	1SNK900001R0000		50	14.00
2	**End sections**	1.5 mm	0.059 in	Dark grey	ES4-SF	1SNK508960R0000		20	1.80
3	**Lateral jumper bars**	10 poles	35 A (IEC)	Grey	PC81-10	1SNA173523R1100		10	5.00
4	**Terminal block markers**	Blank marker		White	MG-CPM 13 41791	1SNB041791R0612		1680	0.27
		Blank card			MC812	1SNK160000R0000		22	10.00
					MC812PA	1SNK169999R0000		20	14.00
		Universal wire markers holder		Grey	UMH	1SNK900611R0000		10	0.20

Complete list of accessories is indicated in the terminal block datasheet including end stops.
Some accessories such as jumper bars may modify the terminal block's ratings: Complete information available in the accessories section of the catalog.

Fuse screw clamp terminal blocks

Description	Color	Type	Part Number		Pkg qty	Weight (1 pce) g
Fuse	Grey, dark grey	ZS4-SF1	1SNK508410R0000		50	13.30

1SNK161009S0201

Technical data valid for copper conductors only.

ZS4-S-R3 screw clamp terminal blocks

Disconnect with lever - 8 mm 0.315 in spacing

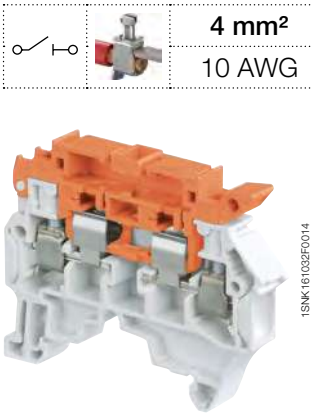

1SNK161032F0014

ZS4-S-R3

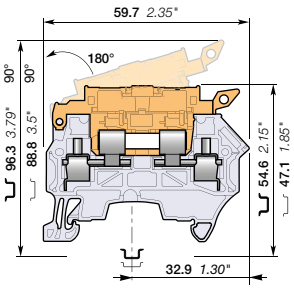

8 mm 0.315 in spacing

4 mm²
10 AWG

Description

Simplify the disconnect operations for the disconnect terminal blocks installed next to fuse terminal blocks ZS4-SF1:

- With the same profile as ZS4-SF1, the ZS4-S-R3 disconnect lever is easily operated by hand and the wiring of the alternated disconnect and fuse circuits is easier.,
- Neutral cartridge CN5 5x25 included.

Ordering details

Description		Color	Type	Part Number		Pkg qty	Weight (1 pce) g
Disconnect	Profile aligned with ZS4-SF1	Grey, orange	ZS4-S-R3	1SNK508416R0000		50	13.30
		Grey, blue	ZS4-S-R3-T2	1SNK508419R0000		50	13.30

Main technical data

Connecting capacity		IEC	UL - CSA
1 conductor per clamp	Rigid: Solid/Stranded	0.2 ... 4 mm²	24 ... 10 AWG
	Flexible without ferrule	0.22 ... 4 mm²	
	Flexible with non insulated ferrule	0.22 ... 4 mm²	24 ... 12 AWG
	Flexible with insulated ferrule	0.22 ... 4 mm²	24 ... 12 AWG
	Gauge	A3-B3	
2 conductors per clamp	Rigid: Solid/Stranded	0.2 ... 2.5 mm²	24 ... 14 AWG
	Flexible without ferrule	0.2 ... 2.5 mm²	
	Flexible with twin ferrule	0.22 ... 2.5 mm²	24 ... 14 AWG
Rated current / Rated cross section		18 A / 2.5 mm²	18 A / 10 AWG
Maximum current / Maximum cross section		18 A / 4 mm²	
Rated short-time withstand current (1s)		300 A	
Rated voltage		630 V	300 V
Impulse withstand voltage		6000 V	
Protection		IP20	NEMA 1

Mounting instructions

Rail	TH 35-7.5, TH 35-15
Wire stripping length	11 mm 0.432 in
Tool	Flat screwdriver Ø 3.5 mm Ø 0.138 in
Torque	0.6 Nm ± 0.1 5.31 lb.in ± 0.885

Recommendation for best usage: in horizontal assemblies, disconnect terminal blocks should be mounted with fixed foot on top (power side) so that the disconnect lever does not partially close through gravity. Furthermore, as specified per IEC 60947-7-1, disconnect terminal blocks are intended to be used for temporary disconnection at zero potential and at no load.

The connecting capacity data for one Rigid: Solid/Stranded, or one Flexible conductor (when applicable) is a mandatory information required by IEC, UL and CSA standards (Copper conductors). All other data are provided as supplementary information only. For more details, please consult our CB, UL or CSA certificates and technical datasheet available on http://www.TE.com

CE | RoHS | USR CNR | CSA | EAC | BV | DNV | Rina

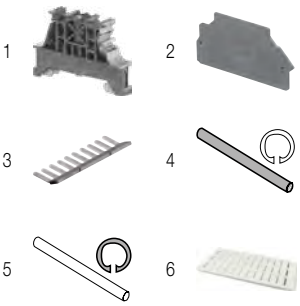

Accessories

	Description			Color	Type	Part Number		Pkg qty	Weight (1 pce) g
1	**End stops**	10 mm	0.394 in	Dark grey	BAM4	1SNK900001R0000		50	14.00
2	**End sections**	1.5 mm	0.059 in	Dark grey	ES4-SF	1SNK508960R0000		20	1.80
3	**Lateral jumper bars**	10 poles	35 A (IEC)	Grey	PC81-10	1SNA173523R1100		10	5.00
4	**Assembly rods**	2 poles			TGA8	1SNA168672R1100		10	1.00
		3 poles			TGA8	1SNA168673R1200		10	1.50
		4 poles			TGA8	1SNA168674R1300		10	2.00
5	**Spring retaining Rings**				ANT	1SNA168675R1400		10	
6	**Terminal block markers**	Blank marker		White	MG-CPM 13 41791	1SNB041791R0612		1680	0.27
		Blank card			MC812	1SNK160000R0000		22	10.00
					MC812PA	1SNK169999R0000		20	14.00
		Universal wire markers holder		Grey	UMH	1SNK900611R0000		10	0.20

Complete list of accessories is indicated in the terminal block datasheet including end stops.
Some accessories such as jumper bars may modify the terminal block's ratings: Complete information available in the accessories section of the catalog.

Fuse screw clamp terminal blocks

Description	Color	Type	Part Number		Pkg qty	Weight (1 pce) g
Fuse	Grey, dark grey	ZS4-SF1	1SNK508410R0000		50	13.30

1SNK161044S0201

Technical data valid for copper conductors only.

ZS4-SF screw clamp terminal blocks
For 5 x 20 fuses - 6 mm 0.236 in spacing

ZS4-SF

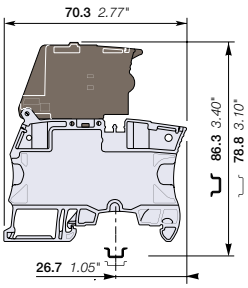

6 mm 0.236 in spacing

4 mm²
10 AWG

Description

- Protect your circuits with 5x20 fuse terminal blocks compliant with IEC 60947-7-3 standard (fuse not supplied with the terminal blocks),
- Simplify the distribution thanks to the two jumper channels aligned with ZS4 or ZS4-R2 feed-through and ZS4-S-R1 disconnect terminal blocks.

Ordering details

Description	Color	Type	Part Number		Pkg qty	Weight (1 pce) g
Fuse	Grey, dark grey	ZS4-SF	1SNK506410R0000		50	18.60

Main technical data

Connecting capacity		IEC	UL - CSA
1 conductor per clamp	Rigid: Solid/Stranded	0.2 ... 4 mm²	24 ... 10 AWG
	Flexible without ferrule	0.22 ... 4 mm²	
	Flexible with non insulated ferrule	0.22 ... 4 mm²	24 ... 12 AWG
	Flexible with insulated ferrule	0.22 ... 4 mm²	24 ... 12 AWG
	Gauge	A3-B3	
2 conductors per clamp	Rigid: Solid/Stranded	0.2 ... 1.5 mm²	24 ... 16 AWG
	Flexible without ferrule	0.2 ... 1.5 mm²	
	Flexible with twin ferrule	0.22 ... 1.5 mm²	24 ... 16 AWG
Rated current / Rated cross section		6.3 A / 4 mm²	10 A / 10 AWG
Rated voltage		500 V	150 V
Impulse withstand voltage		6000 V	
Protection		IP20	NEMA 1

Mounting instructions

Rail	TH 35-7.5, TH 35-15
Wire stripping length	10.5 mm 0.412 in
Tool	Flat screwdriver Ø 3.5 mm Ø 0.138 in
Torque	0.6 Nm ± 0.1 5.31 lb.in ± 0.885

Mount your fuse safely without touching any active part: put the fuse into the hooks of the fuse holder shutter; at the closing of the shutter, the fuse is perfectly in place in the fuse holder.

Separate arrangement		Assembly composed of 1 fuse terminal block in between non fuse terminal blocks	Overload and short-circuit protection	2.5 W
			Exclusive short-circuit protection	4 W
Compound arrangement		Assembly composed of 5 fuse terminal blocks	Overload and short-circuit protection	2.5 W
			Exclusive short-circuit protection	4 W

The connecting capacity data for one Rigid: Solid/Stranded, or one Flexible conductor (when applicable) is a mandatory information required by IEC, UL and CSA standards (Copper conductors). All other data are provided as supplementary information only. For more details, please consult our CB, UL or CSA certificates and technical datasheet available on http://www.TE.com

CE CB RoHS USR CNR CSA EAC BV DNV Rina

Accessories

	Description			Color	Type	Part Number		Pkg qty	Weight (1 pce) g
1	End stops	10 mm	0.394 in	Dark grey	BAM4	1SNK900001R0000		50	14.00
2	Jumper bars	2 poles	41 A (IEC)	Orange	JB6-2	1SNK906302R0000		50	1.30
		3 poles	41 A (IEC)		JB6-3	1SNK906303R0000		50	2.10
		4 poles	41 A (IEC)		JB6-4	1SNK906304R0000		50	2.90
		5 poles	41 A (IEC)		JB6-5	1SNK906305R0000		50	3.60
		10 poles	41 A (IEC)		JB6-10	1SNK906310R0000		20	7.40
3	Test adapters	For test plugs DIA 2 mm 0.079 in		Dark grey	TP2	1SNK900203R0000		20	1.70
		For test plugs DIA 4 mm 0.157 in			TP4	1SNK900205R0000		20	2.40
4	Test connectors	End module, 5.2 mm 0.205 in		Dark grey	TC5-R1	1SNK900201R0000		10	5.20
5	Spacers	0.8 mm	0.031 in	Dark grey	ES-TC6	1SNK900105R0000		10	0.80
6	Terminal block markers	Blank marker		White	MG-CPM 13 41791	1SNB041791R0612		1680	0.27
		Blank card			MC612	1SNK150000R0000		22	10.00
					MC612PA	1SNK159999R0000		20	11.00
		Universal wire markers holder		Grey	UMH	1SNK900611R0000		10	0.20

Complete list of accessories is indicated in the terminal block datasheet including end stops.
Some accessories such as jumper bars may modify the terminal block's ratings: Complete information available in the accessories section of the catalog.

1SNK161005S0201

Technical data valid for copper conductors only.

ZS4-SF-T screw clamp terminal blocks

For 5 x 20 fuses - with test socket - 6 mm 0.236 in spacing

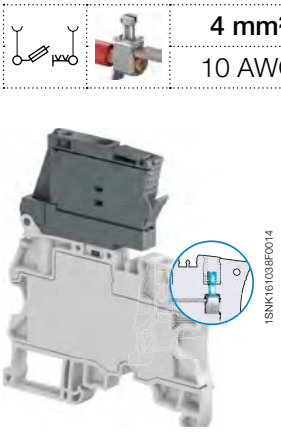

ZS4-SF-T

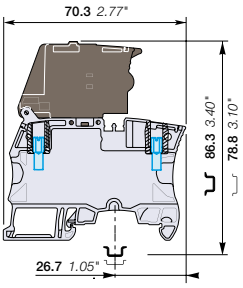

6 mm 0.236 in spacing

	4 mm²
	10 AWG

Description

- Protect your circuits with 5x20 fuse terminal blocks compliant with IEC 60947-7-3 standard (fuse not supplied with the terminal blocks),
- Simplify the distribution thanks to the two jumper channels aligned with ZS4 or ZS4-R2 feed-through and ZS4-S-R1 disconnect terminal blocks,
- Ease the test with built-in test socket screws.

Ordering details

Description		Color	Type	Part Number		Pkg qty	Weight (1 pce) g
Fuse	With 2 test sockets DIA 2 mm 0.079 in	Grey, dark grey	ZS4-SF-T2	1SNK506411R0000		50	18.60

Main technical data

Connecting capacity		IEC	UL - CSA
1 conductor per clamp	Rigid: Solid/Stranded	0.2 ... 4 mm²	24 ... 10 AWG
	Flexible without ferrule	0.22 ... 4 mm²	
	Flexible with non insulated ferrule	0.22 ... 4 mm²	24 ... 12 AWG
	Flexible with insulated ferrule	0.22 ... 4 mm²	24 ... 12 AWG
	Gauge	A3-B3	
2 conductors per clamp	Rigid: Solid/Stranded	0.2 ... 1.5 mm²	24 ... 16 AWG
	Flexible without ferrule	0.2 ... 1.5 mm²	
	Flexible with twin ferrule	0.22 ... 1.5 mm²	24 ... 16 AWG
Rated current / Rated cross section		6.3 A / 4 mm²	10 A / 10 AWG
Rated voltage		500 V	150 V
Impulse withstand voltage		6000 V	
Protection		IP20	NEMA 1

Mounting instructions

Rail	TH 35-7.5, TH 35-15
Wire stripping length	10.5 mm 0.412 in
Tool	Flat screwdriver Ø 3.5 mm Ø 0.138 in
Torque	0.6 Nm ± 0.1 5.31 lb.in ± 0.885

Mount your fuse safely without touching any active part: put the fuse into the hooks of the fuse holder shutter; at the closing of the shutter, the fuse is perfectly in place in the fuse holder.

Separate arrangement	Assembly composed of 1 fuse terminal block in between non fuse terminal blocks	Overload and short-circuit protection	2.5 W
		Exclusive short-circuit protection	4 W
Compound arrangement	Assembly composed of 5 fuse terminal blocks	Overload and short-circuit protection	2.5 W
		Exclusive short-circuit protection	4 W

The connecting capacity data for one Rigid: Solid/Stranded, or one Flexible conductor (when applicable) is a mandatory information required by IEC, UL and CSA standards (Copper conductors). All other data are provided as supplementary information only. For more details, please consult our CB, UL or CSA certificates and technical datasheet available on http://www.TE.com

CE CB RoHS USR CNR CSA EAC BV DNV Rina

Accessories

	Description			Color	Type	Part Number		Pkg qty	Weight (1 pce) g
1	**End stops**	10 mm	0.394 in	Dark grey	BAM4	1SNK900001R0000		50	14.00
2	**Jumper bars**	2 poles	41 A (IEC)	Orange	JB6-2	1SNK906302R0000		50	1.30
		3 poles	41 A (IEC)		JB6-3	1SNK906303R0000		50	2.10
		4 poles	41 A (IEC)		JB6-4	1SNK906304R0000		50	2.90
		5 poles	41 A (IEC)		JB6-5	1SNK906305R0000		50	3.60
		10 poles	41 A (IEC)		JB6-10	1SNK906310R0000		20	7.40
3	**Test connectors**	End module, 5.2 mm 0.205 in		Dark grey	TC5-R1	1SNK900201R0000		10	5.20
4	**Spacers**	0.8 mm	0.031 in	Dark grey	ES-TC6	1SNK900105R0000		10	0.80
5	**Terminal block markers**	Blank marker		White	MG-CPM 13 41791	1SNB041791R0612		1680	0.27
		Blank card			MC612	1SNK150000R0000		22	10.00
					MC612PA	1SNK159999R0000		20	11.00
		Universal wire markers holder		Grey	UMH	1SNK900611R0000		10	0.20

Complete list of accessories is indicated in the terminal block datasheet including end stops.
Some accessories such as jumper bars may modify the terminal block's ratings: Complete information available in the accessories section of the catalog.

1SNK161038S0201

Technical data valid for copper conductors only.

ZS4-SF-R screw clamp terminal blocks

For 5 x 20 fuses - with blown fuse indicator - 6 mm 0.236 in spacing

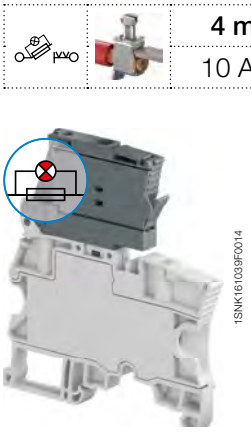

ZS4-SF-R

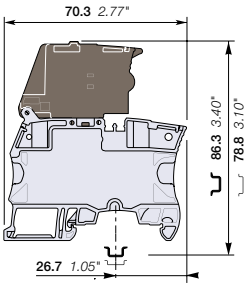

6 mm 0.236 in spacing

	4 mm²
	10 AWG

Description

- Protect your circuits with 5x20 fuse terminal blocks compliant with IEC 60947-7-3 standard (fuse not supplied with the terminal blocks),
- Simplify the distribution thanks to the two jumper channels aligned with ZS4 or ZS4-R2 feed-through and ZS4-S-R1 disconnect terminal blocks,
- Quickly identify the defective circuit thanks to the blown fuse indicator (with leakage current < 0.5 mA).

Ordering details

Description		Color	Type	Part Number		Pkg qty	Weight (1 pce) g
Fuse	With blown fuse indicator 115 ... 250 V AC / DC	Grey, dark grey	ZS4-SF-R3	1SNK506415R0000		50	18.60
	With blown fuse indicator 24 ... 110 V AC / DC		ZS4-SF-R1	1SNK506412R0000		50	18.60

Main technical data

Connecting capacity		IEC	UL - CSA
1 conductor per clamp	Rigid: Solid/Stranded	0.2 ... 4 mm²	24 ... 10 AWG
	Flexible without ferrule	0.22 ... 4 mm²	
	Flexible with non insulated ferrule	0.22 ... 4 mm²	24 ... 12 AWG
	Flexible with insulated ferrule	0.22 ... 4 mm²	24 ... 12 AWG
	Gauge	A3-B3	
2 conductors per clamp	Rigid: Solid/Stranded	0.2 ... 1.5 mm²	24 ... 16 AWG
	Flexible without ferrule	0.2 ... 1.5 mm²	
	Flexible with twin ferrule	0.22 ... 1.5 mm²	24 ... 16 AWG
Rated current / Rated cross section		6.3 A / 4 mm²	10 A / 10 AWG
Rated voltage		500 V	150 V
Impulse withstand voltage		6000 V	
Protection		IP20	NEMA 1

Mounting instructions

Rail		TH 35-7.5, TH 35-15
Wire stripping length		10.5 mm 0.412 in
Tool		Flat screwdriver Ø 3.5 mm Ø 0.138 in
Torque		0.6 Nm ± 0.1 5.31 lb.in ± 0.885

Mount your fuse safely without touching any active part: put the fuse into the hooks of the fuse holder shutter; at the closing of the shutter, the fuse is perfectly in place in the fuse holder.

Separate arrangement		Assembly composed of 1 fuse terminal block in between non fuse terminal blocks	Overload and short-circuit protection	2.5 W
			Exclusive short-circuit protection	4 W
Compound arrangement		Assembly composed of 5 fuse terminal blocks	Overload and short-circuit protection	2.5 W
			Exclusive short-circuit protection	4 W

The connecting capacity data for one Rigid: Solid/Stranded, or one Flexible conductor (when applicable) is a mandatory information required by IEC, UL and CSA standards (Copper conductors). All other data are provided as supplementary information only. For more details, please consult our CB, UL or CSA certificates and technical datasheet available on http://www.TE.com

CE, CB, RoHS, USR CNR, CSA, EAC, BV, DNV, Rina

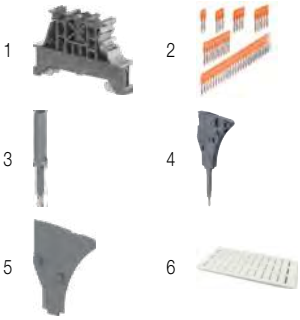

Accessories

	Description			Color	Type	Part Number		Pkg qty	Weight (1 pce) g
1	**End stops**	10 mm	0.394 in	Dark grey	BAM4	1SNK900001R0000		50	14.00
2	**Jumper bars**	2 poles	41 A (IEC)	Orange	JB6-2	1SNK906302R0000		50	1.30
		3 poles	41 A (IEC)		JB6-3	1SNK906303R0000		50	2.10
		4 poles	41 A (IEC)		JB6-4	1SNK906304R0000		50	2.90
		5 poles	41 A (IEC)		JB6-5	1SNK906305R0000		50	3.60
		10 poles	41 A (IEC)		JB6-10	1SNK906310R0000		20	7.40
3	**Test adapters**	For test plugs DIA 2 mm 0.079 in		Dark grey	TP2	1SNK900203R0000		20	1.70
		For test plugs DIA 4 mm 0.157 in			TP4	1SNK900205R0000		20	2.40
4	**Test connectors**	End module, 5.2 mm 0.205 in		Dark grey	TC5-R1	1SNK900201R0000		10	5.20
5	**Spacers**	0.8 mm	0.031 in	Dark grey	ES-TC6	1SNK900105R0000		10	0.80
6	**Terminal block markers**	Blank marker		White	MG-CPM 13 41791	1SNB041791R0612		1680	0.27
		Blank card			MC612	1SNK150000R0000		22	10.00
					MC612PA	1SNK159999R0000		20	11.00
		Universal wire markers holder		Grey	UMH	1SNK900611R0000		10	0.20

Complete list of accessories is indicated in the terminal block datasheet including end stops.
Some accessories such as jumper bars may modify the terminal block's ratings: Complete information available in the accessories section of the catalog.

1SNK161006S0201

Technical data valid for copper conductors only.

ZS4-SF-R screw clamp terminal blocks

For 5 x 20 fuses - with blown fuse indicator and test sockets - 6 mm 0.236 in spacing

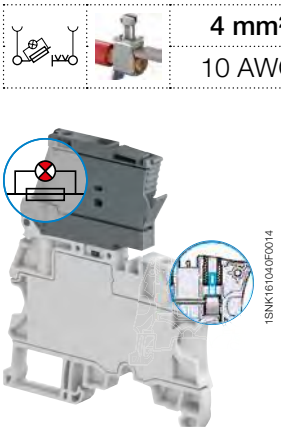

ZS4-SF-R

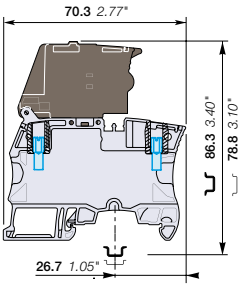

6 mm 0.236 in spacing

	4 mm²
	10 AWG

Description

- Protect your circuits with 5x20 fuse terminal blocks compliant with IEC 60947-7-3 standard (fuse not supplied with the terminal blocks),
- Simplify the distribution thanks to the two jumper channels aligned with ZS4 or ZS4-R2 feed-through and ZS4-S-R1 disconnect terminal blocks,
- Ease the test with built-in test socket screws,
- Quickly identify the defective circuit thanks to the blown fuse indicator (with leakage current < 0.5 mA).

Ordering details

Description		Color	Type	Part Number		Pkg qty	Weight (1 pce) g
Fuse	With blown fuse indicator 115 ... 250 V AC / DC and 2 test sockets DIA 2 mm 0.079 in	Grey, dark grey	ZS4-SF-R4	1SNK506416R0000		50	18.60
	With blown fuse indicator 24 ... 110 V AC / DC and 2 test sockets DIA 2 mm 0.079 in		ZS4-SF-R2	1SNK506413R0000		50	18.60

Main technical data

Connecting capacity		IEC	UL - CSA
1 conductor per clamp	Rigid: Solid/Stranded	0.2 ... 4 mm²	24 ... 10 AWG
	Flexible without ferrule	0.22 ... 4 mm²	
	Flexible with non insulated ferrule	0.22 ... 4 mm²	24 ... 12 AWG
	Flexible with insulated ferrule	0.22 ... 4 mm²	24 ... 12 AWG
	Gauge	A3-B3	
2 conductors per clamp	Rigid: Solid/Stranded	0.2 ... 1.5 mm²	24 ... 16 AWG
	Flexible without ferrule	0.2 ... 1.5 mm²	
	Flexible with twin ferrule	0.22 ... 1.5 mm²	24 ... 16 AWG
Rated current / Rated cross section		6.3 A / 4 mm²	10 A / 10 AWG
Rated voltage		500 V	150 V
Impulse withstand voltage		6000 V	
Protection		IP20	NEMA 1

Mounting instructions

Rail	TH 35-7.5, TH 35-15
Wire stripping length	10.5 mm 0.412 in
Tool	Flat screwdriver Ø 3.5 mm Ø 0.138 in
Torque	0.6 Nm ± 0.1 5.31 lb.in ± 0.885

Mount your fuse safely without touching any active part: put the fuse into the hooks of the fuse holder shutter; at the closing of the shutter, the fuse is perfectly in place in the fuse holder.

Separate arrangement		Assembly composed of 1 fuse terminal block in between non fuse terminal blocks	Overload and short-circuit protection	2.5 W
			Exclusive short-circuit protection	4 W
Compound arrangement		Assembly composed of 5 fuse terminal blocks	Overload and short-circuit protection	2.5 W
			Exclusive short-circuit protection	4 W

The connecting capacity data for one Rigid: Solid/Stranded, or one Flexible conductor (when applicable) is a mandatory information required by IEC, UL and CSA standards (Copper conductors). All other data are provided as supplementary information only. For more details, please consult our CB, UL or CSA certificates and technical datasheet available on http://www.TE.com

CE CB RoHS USR CNR CSA EAC BV DNV Rina

Accessories

	Description			Color	Type	Part Number		Pkg qty	Weight (1 pce) g
1	**End stops**	10 mm	0.394 in	Dark grey	BAM4	1SNK900001R0000		50	14.00
2	**Jumper bars**	2 poles	41 A (IEC)	Orange	JB6-2	1SNK906302R0000		50	1.30
		3 poles	41 A (IEC)		JB6-3	1SNK906303R0000		50	2.10
		4 poles	41 A (IEC)		JB6-4	1SNK906304R0000		50	2.90
		5 poles	41 A (IEC)		JB6-5	1SNK906305R0000		50	3.60
		10 poles	41 A (IEC)		JB6-10	1SNK906310R0000		20	7.40
3	**Test connectors**	End module, 5.2 mm 0.205 in		Dark grey	TC5-R1	1SNK900201R0000		10	5.20
4	**Spacers**	0.8 mm	0.031 in	Dark grey	ES-TC6	1SNK900105R0000		10	0.80
5	**Terminal block markers**	Blank marker		White	MG-CPM 13 41791	1SNB041791R0612		1680	0.27
		Blank card			MC612	1SNK150000R0000		22	10.00
					MC612PA	1SNK159999R0000		20	11.00
		Universal wire markers holder		Grey	UMH	1SNK900611R0000		10	0.20

Complete list of accessories is indicated in the terminal block datasheet including end stops.
Some accessories such as jumper bars may modify the terminal block's ratings: Complete information available in the accessories section of the catalog.

1SNK161037S0201

Technical data valid for copper conductors only.

ZS4-R2 screw clamp terminal blocks
Feed-through - 6 mm 0.236 in spacing

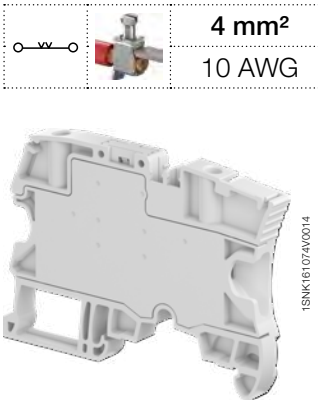

ZS4-R2

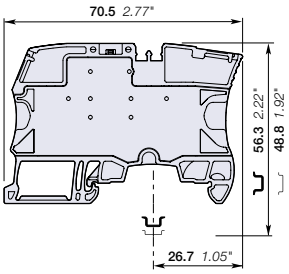

6 mm 0.236 in spacing

	4 mm²
	10 AWG

Description

- Simplify the distribution of circuits in marshalling cabinets thanks to our feed-through terminal blocks with the same profile as ZS4-SF fuse, ZS4-S-R1 disconnect and ZS4-PE-R2 ground terminal blocks: aligned conductor entries, jumper channels and marking in just 6 mm 0.236 in spacing,
- No end section needed: closed block.

Ordering details

Description		Color	Type	Part Number		Pkg qty	Weight (1 pce) g
Feed-through	Profile aligned with ZS4-SF and ZS4-S-R1	Grey	ZS4-R2	1SNK506013R0000		50	12.40

Main technical data

Connecting capacity		IEC	UL - CSA
1 conductor per clamp	Rigid: Solid/Stranded	0.2 ... 4 mm²	24 ... 10 AWG
	Flexible without ferrule	0.22 ... 4 mm²	
	Flexible with non insulated ferrule	0.22 ... 4 mm²	24 ... 12 AWG
	Flexible with insulated ferrule	0.22 ... 4 mm²	24 ... 12 AWG
	Gauge	A3-B3	
2 conductors per clamp	Rigid: Solid/Stranded	0.2 ... 1.5 mm²	24 ... 16 AWG
	Flexible without ferrule	0.2 ... 1.5 mm²	
	Flexible with twin ferrule	0.22 ... 1.5 mm²	24 ... 16 AWG
Rated current / Rated cross section		32 A / 4 mm²	30 A / 10 AWG
Rated short-time withstand current (1s)		480 A	
Rated voltage		800 V	300 V
Impulse withstand voltage		8000 V	
Protection		IP20	NEMA 1

Mounting instructions

Rail	TH 35-7.5, TH 35-15
Wire stripping length	10.5 mm 0.413 in
Tool	Flat screwdriver Ø 3.5 mm Ø 0.138 in
Torque	0.6 Nm ± 0.1 5.31 lb.in ± 0.885

The connecting capacity data for one Rigid: Solid/Stranded, or one Flexible conductor (when applicable) is a mandatory information required by IEC, UL and CSA standards (Copper conductors). All other data are provided as supplementary information only. For more details, please consult our CB, UL or CSA certificates and technical datasheet available on http://www.TE.com

CE, CB, RoHS, USR CNR, CSA, EAC, BV, DNV

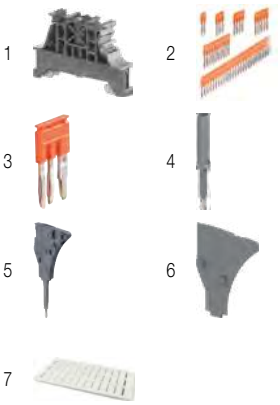

Accessories

	Description			Color	Type	Part Number		Pkg qty	Weight (1 pce) g
1	**End stops**	10 mm	0.394 in	Dark grey	BAM4	1SNK900001R0000		50	14.00
2	**Jumper bars**	2 poles	41 A (IEC)	Orange	JB6-2	1SNK906302R0000		50	1.30
		3 poles	41 A (IEC)		JB6-3	1SNK906303R0000		50	2.10
		4 poles	41 A (IEC)		JB6-4	1SNK906304R0000		50	2.90
		5 poles	41 A (IEC)		JB6-5	1SNK906305R0000		50	3.60
		10 poles	41 A (IEC)		JB6-10	1SNK906310R0000		20	7.40
3	**Cross spacing jumpers**	3 poles	32 A (IEC)	Orange	JB85-3	1SNK900603R0000		10	2.80
4	**Test adapters**	For test plugs DIA 2 mm 0.079 in		Dark grey	TP2	1SNK900203R0000		20	1.70
		For test plugs DIA 4 mm 0.157 in			TP4	1SNK900205R0000		20	2.40
5	**Test connectors**	End module, 5.2 mm 0.205 in		Dark grey	TC5-R1	1SNK900201R0000		10	5.20
6	**Spacers**	0.8 mm	0.031 in	Dark grey	ES-TC6	1SNK900105R0000		10	0.80
7	**Terminal block markers**	Blank marker		White	MG-CPM 13 41791	1SNB041791R0612		1680	0.27
		Blank card			MC612	1SNK150000R0000		22	10.00
					MC612PA	1SNK159999R0000		20	11.00
		Universal wire markers holder		Grey	UMH	1SNK900611R0000		10	0.20

Complete list of accessories is indicated in the terminal block datasheet including end stops.
Some accessories such as jumper bars may modify the terminal block's ratings: Complete information available in the accessories section of the catalog.

ZS4-SF ZS4-S-R1

Screw clamp terminal blocks

Description		Color	Type	Part Number		Pkg qty	Weight (1 pce) g
Fuse	Profile aligned with ZS4-R2 and ZS4-PE-R2	Grey, dark grey	ZS4-SF	1SNK506410R0000		50	18.60
Disconnect	Profile aligned with ZS4-R2 and ZS4-PE-R2	Grey	ZS4-S-R1	1SNK506310R0000		50	13.20

1SNK161083S0201

Technical data valid for copper conductors only.

ZS4-PE-R2 screw clamp terminal blocks
Ground - 6 mm 0.236 in spacing

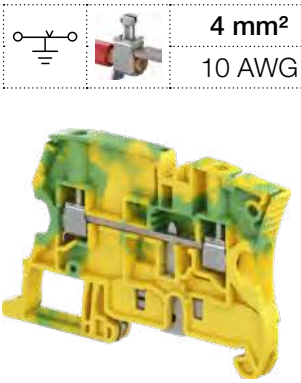

ZS4-PE-R2

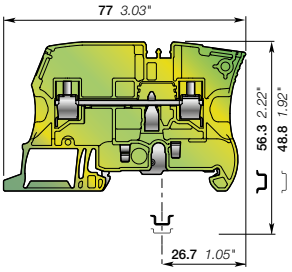

6 mm 0.236 in spacing

	4 mm²
	10 AWG

Description

Simplify the shielding connection of your analog circuits in marshalling cabinets thanks to our ground terminal blocks with the same profile as ZS4-SF fuse, ZS4-S-R1 disconnect and ZS4-R2 feed-through terminal blocks.

Ordering details

Description		Color	Type	Part Number		Pkg qty	Weight (1 pce) g
Ground	Screwless rail connection	Green-yellow	ZS4-PE-R2	1SNK506153R0000		25	15.30

Main technical data

Connecting capacity		IEC	UL - CSA
1 conductor per clamp	Rigid: Solid/Stranded	0.2 ... 4 mm²	24 ... 10 AWG
	Flexible without ferrule	0.22 ... 4 mm²	
	Flexible with non insulated ferrule	0.22 ... 4 mm²	24 ... 12 AWG
	Flexible with insulated ferrule	0.22 ... 4 mm²	24 ... 12 AWG
	Gauge	A3-B3	
Rated cross section		4 mm²	10 AWG
Rated short-time withstand current (1s)		480 A	396 A
Protection		IP20	NEMA 1

Mounting instructions

Rail	TH 35-7.5, TH 35-15
Wire stripping length	10.5 mm 0.413 in
Tool	Flat screwdriver Ø 3.5 mm Ø 0.138 in
Torque	0.6 Nm ± 0.1 5.31 lb.in ± 0.885

The connecting capacity data for one Rigid: Solid/Stranded, or one Flexible conductor (when applicable) is a mandatory information required by IEC, UL and CSA standards (Copper conductors). All other data are provided as supplementary information only. For more details, please consult our CB, UL or CSA certificates and technical datasheet available on http://www.TE.com

CE, CB, RoHS, USR CNR, CSA, EAC, BV, DNV

3

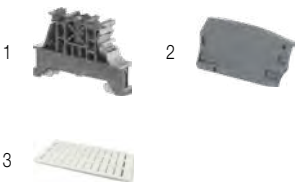

Accessories

	Description			Color	Type	Part Number		Pkg qty	Weight (1 pce) g
1	**End stops**	10 mm	0.394 in	Dark grey	BAM4	1SNK900001R0000		50	14.00
2	**End sections**	2.2 mm	0.087 in	Dark grey	ES6-4S	1SNK505911R0000		20	3.10
3	**Terminal block markers**	Blank marker		White	MG-CPM 13 41791	1SNB041791R0612		1680	0.27
		Blank card			MC612	1SNK150000R0000		22	10.00
					MC612PA	1SNK159999R0000		20	11.00
		Universal wire markers holder		Grey	UMH	1SNK900611R0000		10	0.20

Complete list of accessories is indicated in the terminal block datasheet including end stops.
Some accessories such as jumper bars may modify the terminal block's ratings: Complete information available in the accessories section of the catalog.

ZS4-SF ZS4-S-R1

Screw clamp terminal blocks

Description		Color	Type	Part Number		Pkg qty	Weight (1 pce) g
Fuse	Profile aligned with ZS4-R2 and ZS4-PE-R2	Grey, dark grey	ZS4-SF	1SNK506410R0000		50	18.60
Disconnect	Profile aligned with ZS4-R2 and ZS4-PE-R2	Grey	ZS4-S-R1	1SNK506310R0000		50	13.20

1SNK161079S0201

Technical data valid for copper conductors only.

ZS4-S-R2 screw clamp terminal blocks

Disconnect with lever - 6 mm 0.236 in spacing

4 mm²
10 AWG

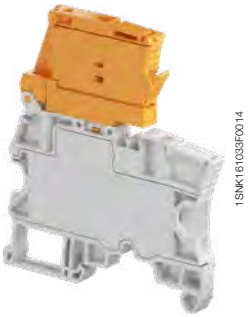

ZS4-S-R2

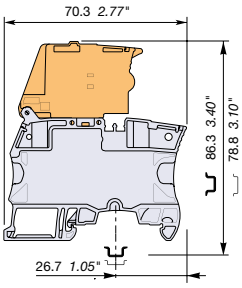

6 mm 0.236 in spacing

Description

Simplify the disconnect operations for the disconnect terminal blocks installed next to fuse terminal blocks ZS4-SF:

– With the same profile as ZS4-SF, the ZS4-S-R2 disconnect lever is easily operated by hand and the wiring of the alternated disconnect and fuse circuits is easier.

Ordering details

Description		Color	Type	Part Number		Pkg qty	Weight (1 pce) g
Disconnect	Profile aligned with ZS4-SF	Grey, orange	ZS4-S-R2	1SNK506414R0000		50	21.6

Main technical data

Connecting capacity		IEC	UL - CSA
1 conductor per clamp	Rigid: Solid/Stranded	0.2 ... 4 mm²	24 ... 10 AWG
	Flexible without ferrule	0.22 ... 4 mm²	
	Flexible with non insulated ferrule	0.22 ... 4 mm²	24 ... 12 AWG
	Flexible with insulated ferrule	0.22 ... 4 mm²	24 ... 12 AWG
	Gauge	A3-B3	
2 conductors per clamp	Rigid: Solid/Stranded	0.2 ... 1.5 mm²	24 ... 16 AWG
	Flexible without ferrule	0.2 ... 1.5 mm²	
	Flexible with twin ferrule	0.22 ... 1.5 mm²	24 ... 16 AWG
Rated current / Rated cross section		18 A / 2.5 mm²	13 A / 10 AWG
Maximum current / Maximum cross section		18 A / 4 mm²	
Rated short-time withstand current (1s)		300 A	
Rated voltage		400 V	150 V
Impulse withstand voltage		6000 V	
Protection		IP20	NEMA 1

Mounting instructions

Rail		TH 35-7.5, TH 35-15
Wire stripping length		10.5 mm 0.412 in
Tool		Flat screwdriver Ø 3.5 mm Ø 0.138 in
Torque		0.6 Nm ± 0.1 5.31 lb.in ± 0.885

Recommendation for best usage: in horizontal assemblies, disconnect terminal blocks should be mounted with fixed foot on top (power side) so that the disconnect lever does not partially close through gravity. Furthermore, as specified per IEC 60947-7-1, disconnect terminal blocks are intended to be used for temporary disconnection at zero potential and at no load.

The connecting capacity data for one Rigid: Solid/Stranded, or one Flexible conductor (when applicable) is a mandatory information required by IEC, UL and CSA standards (Copper conductors). All other data are provided as supplementary information only. For more details, please consult our CB, UL or CSA certificates and technical datasheet available on http://www.TE.com

CE | CB | RoHS | USR CNR | CSA | EAC | BV | DNV | Rina

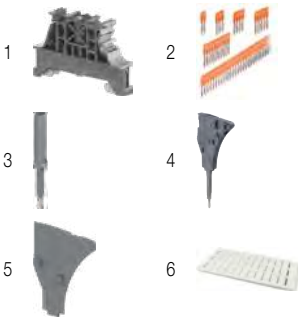

Accessories

	Description			Color	Type	Part Number		Pkg qty	Weight (1 pce) g
1	**End stops**	10 mm	0.394 in	Dark grey	BAM4	1SNK900001R0000		50	14.00
2	**Jumper bars**	2 poles	41 A (IEC)	Orange	JB6-2	1SNK906302R0000		50	1.30
		3 poles	41 A (IEC)		JB6-3	1SNK906303R0000		50	2.10
		4 poles	41 A (IEC)		JB6-4	1SNK906304R0000		50	2.90
		5 poles	41 A (IEC)		JB6-5	1SNK906305R0000		50	3.60
		10 poles	41 A (IEC)		JB6-10	1SNK906310R0000		20	7.40
3	**Test adapters**	For test plugs DIA 2 mm 0.079 in		Dark grey	TP2	1SNK900203R0000		20	1.70
		For test plugs DIA 4 mm 0.157 in			TP4	1SNK900205R0000		20	2.40
4	**Test connectors**	End module, 5.2 mm 0.205 in		Dark grey	TC5-R1	1SNK900201R0000		10	5.20
5	**Spacers**	0.8 mm	0.031 in	Dark grey	ES-TC6	1SNK900105R0000		10	0.80
6	**Terminal block markers**	Blank marker		White	MG-CPM 13 41791	1SNB041791R0612		1680	0.27
		Blank card			MC612	1SNK150000R0000		22	10.00
					MC612PA	1SNK159999R0000		20	11.00
		Universal wire markers holder		Grey	UMH	1SNK900611R0000		10	0.20

Complete list of accessories is indicated in the terminal block datasheet including end stops.
Some accessories such as jumper bars may modify the terminal block's ratings: Complete information available in the accessories section of the catalog.

Fuse screw clamp terminal blocks

Description	Color	Type	Part Number		Pkg qty	Weight (1 pce) g
Fuse	Grey, dark grey	ZS4-SF	1SNK506410R0000		50	18.60

1SNK161043S0201

Technical data valid for copper conductors only.

ZS10-SF screw clamp terminal blocks

For 6.3x32 fuses - 8 mm 0.315 in spacing

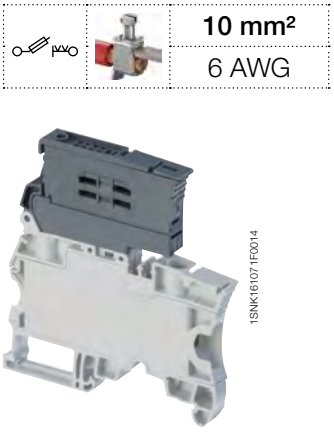

10 mm²	
6 AWG	

ZS10-SF

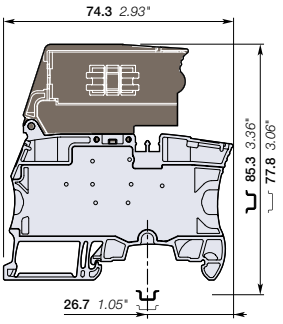

8 mm 0.315 in spacing

Description

- Protect your circuits with 6.3x32 (¼ x 1¼ in) fuse terminal blocks compliant with IEC 60947-7-3 standard (fuse not supplied with the terminal blocks),
- Simplify the distribution thanks to the two jumper channels.

Ordering details

Description		Color	Type	Part Number		Pkg qty	Weight (1 pce) g
Fuse	Closed block	Grey, dark grey	ZS10-SF	1SNK508418R0000		50	28.50

Main technical data

Connecting capacity		IEC	UL - CSA
1 conductor per clamp	Rigid: Solid/Stranded	0.5 ... 10 mm²	24 ... 6 AWG
	Flexible without ferrule	0.5 ... 10 mm²	
	Flexible with non insulated ferrule	0.5 ... 10 mm²	24 ... 8 AWG
	Flexible with insulated ferrule	0.5 ... 6 mm²	24 ... 10 AWG
	Gauge	A5-B5	
2 conductors per clamp	Rigid: Solid/Stranded	0.5 ... 4 mm²	20 ... 12 AWG
	Flexible without ferrule	0.5 ... 4 mm²	
	Flexible with twin ferrule	0.5 ... 4 mm²	20 ... 12 AWG
Rated current / Rated cross section		10 A / 10 mm²	22 A / 6 AWG
Rated voltage		630 V	600 V
Impulse withstand voltage		6000 V	
Protection		IP20	NEMA 1

Mounting instructions

Rail		TH 35-7.5, TH 35-15
Wire stripping length		13 mm 0.512 in
Tool		Flat screwdriver Ø 4 mm Ø 0.157 in
Torque		1.3 Nm ± 0.3 11.5 lb.in ± 2.65

Mount your fuse safely without touching any active part: put the fuse into the hooks of the fuse holder shutter; at the closing of the shutter, the fuse is perfectly in place in the fuse holder.

Separate arrangement		Assembly composed of 1 fuse terminal block in between non fuse terminal blocks	Overload and short-circuit protection	4 W
			Exclusive short-circuit protection	4 W
Compound arrangement		Assembly composed of 5 fuse terminal blocks	Overload and short-circuit protection	2.5 W
			Exclusive short-circuit protection	2.5 W

The connecting capacity data for one Rigid: Solid/Stranded, or one Flexible conductor (when applicable) is a mandatory information required by IEC, UL and CSA standards (Copper conductors). All other data are provided as supplementary information only. For more details, please consult our CB, UL or CSA certificates and technical datasheet available on http://www.TE.com

CE CB RoHS USR CNR CSA EAC BV DNV

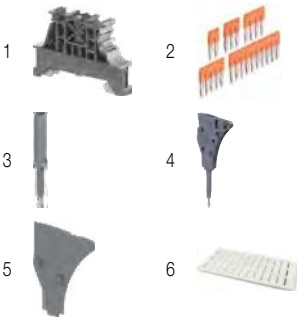

Accessories

	Description			Color	Type	Part Number		Pkg qty	Weight (1 pce) g
1	**End stops**	10 mm	0.394 in	Dark grey	BAM4	1SNK900001R0000		50	14.00
2	**Jumper bars**	2 poles	57 A (IEC)	Orange	JB8-2	1SNK908302R0000		50	2.70
		3 poles	57 A (IEC)		JB8-3	1SNK908303R0000		50	4.10
		4 poles	57 A (IEC)		JB8-4	1SNK908304R0000		50	5.60
		5 poles	57 A (IEC)		JB8-5	1SNK908305R0000		40	7.00
		10 poles	57 A (IEC)		JB8-10	1SNK908310R0000		20	14.20
3	**Test adapters**	For test plugs DIA 2 mm 0.079 in		Dark grey	TP2	1SNK900203R0000		20	1.70
		For test plugs DIA 4 mm 0.157 in			TP4	1SNK900205R0000		20	2.40
4	**Test connectors**	5.2 mm 0.205 in spacing		Dark grey	TC5	1SNK900200R0000		10	5.20
		End module, 5.2 mm 0.205 in			TC5-R1	1SNK900201R0000		10	5.20
5	**Spacers**	2.8 mm	0.110 in	Dark grey	ES-TC8	1SNK900104R0000		10	1.40
6	**Terminal block markers**	Blank marker		White	MG-CPM 13 41791	1SNB041791R0612		1680	0.27
		Blank card			MC812	1SNK160000R0000		22	10.00
					MC812PA	1SNK169999R0000		20	14.00
		Universal wire markers holder		Grey	UMH	1SNK900611R0000		10	0.20

Complete list of accessories is indicated in the terminal block datasheet including end stops.
Some accessories such as jumper bars may modify the terminal block's ratings: Complete information available in the accessories section of the catalog.

1SNK161052S0201

Technical data valid for copper conductors only.

ZS10-SF-R screw clamp terminal blocks

For 6.3x32 fuses - with blown fuse indicator - 8 mm 0.315 in spacing

ZS10-SF-R

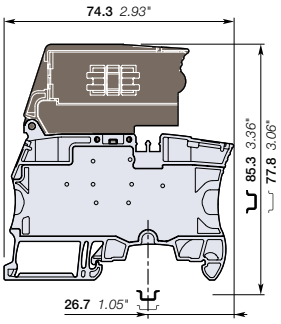

8 mm 0.315 in spacing

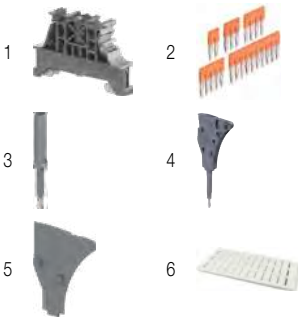

	10 mm²
	6 AWG

Description

- Protect your circuits with 6.3x32 (¼ x 1¼ in) fuse terminal blocks compliant with IEC 60947-7-3 standard (fuse not supplied with the terminal blocks),
- Quickly identify the defective circuit thanks to the blown fuse indicator (with leakage current < 0.5 mA).

Ordering details

Description		Color	Type	Part Number		Pkg qty	Weight (1 pce) g
Fuse	With blown fuse indicator 115 ... 250 V AC / DC	Grey, dark grey	ZS10-SF-R3	1SNK508422R0000		50	30.50
	With blown fuse indicator 24 ... 110 V AC / DC		ZS10-SF-R1	1SNK508421R0000		50	30.50

Main technical data

Connecting capacity		IEC	UL - CSA
1 conductor per clamp	Rigid: Solid/Stranded	0.5 ... 10 mm²	24 ... 6 AWG
	Flexible without ferrule	0.5 ... 10 mm²	
	Flexible with non insulated ferrule	0.5 ... 10 mm²	24 ... 8 AWG
	Flexible with insulated ferrule	0.5 ... 6 mm²	24 ... 10 AWG
	Gauge	A5-B5	
2 conductors per clamp	Rigid: Solid/Stranded	0.5 ... 4 mm²	20 ... 12 AWG
	Flexible without ferrule	0.5 ... 4 mm²	
	Flexible with twin ferrule	0.5 ... 4 mm²	20 ... 12 AWG
Rated current / Rated cross section		10 A / 10 mm²	22 A / 6 AWG
Rated voltage		630 V	600 V
Impulse withstand voltage		6000 V	
Protection		IP20	NEMA 1

Mounting instructions

Rail	TH 35-7.5, TH 35-15
Wire stripping length	13 mm 0.512 in
Tool	Flat screwdriver Ø 4 mm Ø 0.157 in
Torque	1.3 Nm ± 0.3 11.5 lb.in ± 2.65

Mount your fuse safely without touching any active part: put the fuse into the hooks of the fuse holder shutter; at the closing of the shutter, the fuse is perfectly in place in the fuse holder.

Separate arrangement		Assembly composed of 1 fuse terminal block in between non fuse terminal blocks	Overload and short-circuit protection	4 W
			Exclusive short-circuit protection	4 W
Compound arrangement		Assembly composed of 5 fuse terminal blocks	Overload and short-circuit protection	2.5 W
			Exclusive short-circuit protection	2.5 W

The connecting capacity data for one Rigid: Solid/Stranded, or one Flexible conductor (when applicable) is a mandatory information required by IEC, UL and CSA standards (Copper conductors). All other data are provided as supplementary information only. For more details, please consult our CB, UL or CSA certificates and technical datasheet available on http://www.TE.com

CE, CB, RoHS, USR CNR, CSA, EAC, BV, DNV

Accessories

	Description			Color	Type	Part Number		Pkg qty	Weight (1 pce) g
1	**End stops**	10 mm	0.394 in	Dark grey	BAM4	1SNK900001R0000		50	14.00
2	**Jumper bars**	2 poles	57 A (IEC)	Orange	JB8-2	1SNK908302R0000		50	2.70
		3 poles	57 A (IEC)		JB8-3	1SNK908303R0000		50	4.10
		4 poles	57 A (IEC)		JB8-4	1SNK908304R0000		50	5.60
		5 poles	57 A (IEC)		JB8-5	1SNK908305R0000		40	7.00
		10 poles	57 A (IEC)		JB8-10	1SNK908310R0000		20	14.20
3	**Test adapters**	For test plugs DIA 2 mm 0.079 in		Dark grey	TP2	1SNK900203R0000		20	1.70
		For test plugs DIA 4 mm 0.157 in			TP4	1SNK900205R0000		20	2.40
4	**Test connectors**	5.2 mm 0.205 in spacing		Dark grey	TC5	1SNK900200R0000		10	5.20
		End module, 5.2 mm 0.205 in			TC5-R1	1SNK900201R0000		10	5.20
5	**Spacers**	2.8 mm	0.110 in	Dark grey	ES-TC8	1SNK900104R0000		10	1.40
6	**Terminal block markers**	Blank marker		White	MG-CPM 13 41791	1SNB041791R0612		1680	0.27
		Blank card			MC812	1SNK160000R0000		22	10.00
					MC812PA	1SNK169999R0000		20	14.00
		Universal wire markers holder		Grey	UMH	1SNK900611R0000		10	0.20

Complete list of accessories is indicated in the terminal block datasheet including end stops.
Some accessories such as jumper bars may modify the terminal block's ratings: Complete information available in the accessories section of the catalog.

1SNK161053S0201

Technical data valid for copper conductors only.

ZS10-S-R2 screw clamp terminal blocks

Disconnect with lever - 8 mm 0.315 in spacing

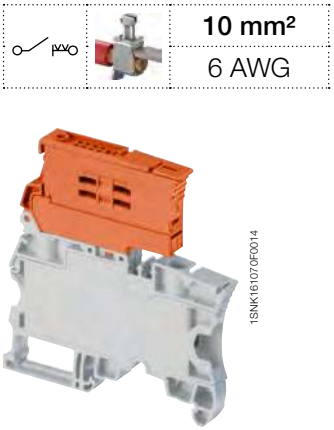

1SNK16107F0014

ZS10-S-R2

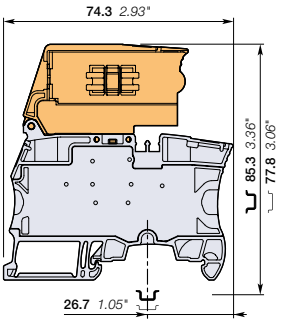

8 mm 0.315 in spacing

	10 mm²
	6 AWG

Description

Simplify the disconnect operations for the disconnect terminal blocks installed next to fuse terminal blocks ZS10-SF:

– With the same profile as ZS10-SF, the ZS10-S-R2 disconnect lever is easily operated by hand and the wiring of the alternated disconnect and fuse circuits is easier.

Ordering details

Description		Color	Type	Part Number		Pkg qty	Weight (1 pce) g
Disconnect	Profile aligned with ZS10-SF	Grey, orange	ZS10-S-R2	1SNK508417R0000		50	35.90

Main technical data

Connecting capacity		IEC	UL - CSA
1 conductor per clamp	Rigid: Solid/Stranded	0.5 ... 10 mm²	24 ... 6 AWG
	Flexible without ferrule	0.5 ... 10 mm²	
	Flexible with non insulated ferrule	0.5 ... 10 mm²	24 ... 8 AWG
	Flexible with insulated ferrule	0.5 ... 6 mm²	24 ... 10 AWG
	Gauge	A5-B5	
2 conductors per clamp	Rigid: Solid/Stranded	0.5 ... 4 mm²	20 ... 12 AWG
	Flexible without ferrule	0.5 ... 4 mm²	
	Flexible with twin ferrule	0.5 ... 4 mm²	20 ... 12 AWG
Rated current / Rated cross section		10 A / 4 mm²	22 A / 25 AWG
Maximum current / Maximum cross section		25 A / 10 mm²	
Rated short-time withstand current (1s)		480 A	
Rated voltage		630 V	600 V
Impulse withstand voltage		6000 V	
Protection		IP20	NEMA 1

Mounting instructions

Rail	TH 35-7.5, TH 35-15
Wire stripping length	13 mm 0.512 in
Tool	Flat screwdriver Ø 4 mm Ø 0.157 in
Torque	1.3 Nm ± 0.3 11.5 lb.in ± 2.65

Recommendation for best usage: in horizontal assemblies, disconnect terminal blocks should be mounted with fixed foot on top (power side) so that the disconnect lever does not partially close through gravity. Furthermore, as specified per IEC 60947-7-1, disconnect terminal blocks are intended to be used for temporary disconnection at zero potential and at no load.

The connecting capacity data for one Rigid: Solid/Stranded, or one Flexible conductor (when applicable) is a mandatory information required by IEC, UL and CSA standards (Copper conductors). All other data are provided as supplementary information only. For more details, please consult our CB, UL or CSA certificates and technical datasheet available on http://www.TE.com

CE CB RoHS USR CNR CSA EAC BV DNV

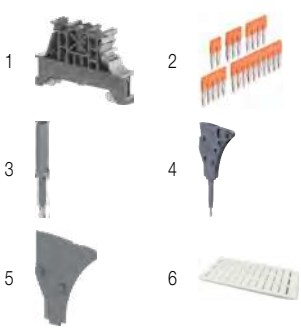

Accessories

	Description			Color	Type	Part Number		Pkg qty	Weight (1 pce) g
1	**End stops**	10 mm	0.394 in	Dark grey	BAM4	1SNK900001R0000		50	14.00
2	**Jumper bars**	2 poles	57 A (IEC)	Orange	JB8-2	1SNK908302R0000		50	2.70
		3 poles	57 A (IEC)		JB8-3	1SNK908303R0000		50	4.10
		4 poles	57 A (IEC)		JB8-4	1SNK908304R0000		50	5.60
		5 poles	57 A (IEC)		JB8-5	1SNK908305R0000		40	7.00
		10 poles	57 A (IEC)		JB8-10	1SNK908310R0000		20	14.20
3	**Test adapters**	For test plugs DIA 2 mm 0.079 in		Dark grey	TP2	1SNK900203R0000		20	1.70
		For test plugs DIA 4 mm 0.157 in			TP4	1SNK900205R0000		20	2.40
4	**Test connectors**	5.2 mm 0.205 in spacing		Dark grey	TC5	1SNK900200R0000		10	5.20
		End module, 5.2 mm 0.205 in			TC5-R1	1SNK900201R0000		10	5.20
5	**Spacers**	2.8 mm	0.110 in	Dark grey	ES-TC8	1SNK900104R0000		10	1.40
6	**Terminal block markers**	Blank marker		White	MG-CPM 13 41791	1SNB041791R0612		1680	0.27
		Blank card			MC812	1SNK160000R0000		22	10.00
					MC812PA	1SNK169999R0000		20	14.00
		Universal wire markers holder		Grey	UMH	1SNK900611R0000		10	0.20

Complete list of accessories is indicated in the terminal block datasheet including end stops.
Some accessories such as jumper bars may modify the terminal block's ratings: Complete information available in the accessories section of the catalog.

Fuse screw clamp terminal blocks

Description		Color	Type	Part Number		Pkg qty	Weight (1 pce) g
Fuse	Closed block	Grey, dark grey	ZS10-SF	1SNK508418R0000		50	28.50

1SNK161055S0201

Technical data valid for copper conductors only.

ZS4-D2 screw clamp terminal blocks

Double deck with 2 feed-through circuits - 5.2 mm 0.205 in spacing

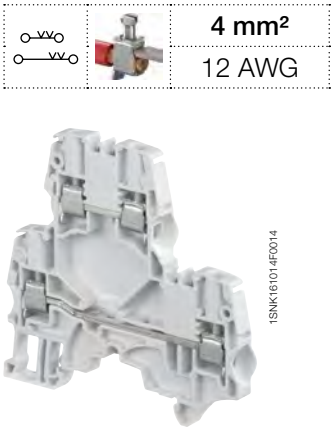

4 mm²	
12 AWG	

ZS4-D2

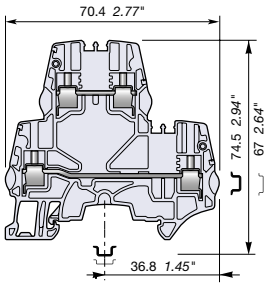

5.2 mm 0.205 in spacing

Description

- Save space with double deck terminal blocks: 2 independent circuits connected in just 5.2 mm 0.205 in spacing,
- Customize yourself the ZS4-D2 by soldering electronic components (up to 8.8 mm x 3.2 mm 0.346 x 0.125 in) in the existing linking bars punching.

Ordering details

Description		Color	Type	Part Number		Pkg qty	Weight (1 pce) g
Feed-through	2 feed-through circuits	Grey	ZS4-D2	1SNK505210R0000		50	15.30
		Blue	ZS4-D2-BL	1SNK505220R0000		50	15.30
		Orange	ZS4-D2-OR	1SNK505230R0000		50	15.30

Main technical data

Connecting capacity		IEC	UL - CSA
1 conductor per clamp	Rigid: Solid/Stranded	0.2 ... 4 mm²	24 ... 12 AWG
	Flexible without ferrule	0.22 ... 4 mm²	
	Flexible with non insulated ferrule	0.22 ... 4 mm²	24 ... 12 AWG
	Flexible with insulated ferrule	0.22 ... 2.5 mm²	24 ... 14 AWG
	Gauge	A3-B3	
2 conductors per clamp	Rigid: Solid/Stranded	0.2 ... 1.5 mm²	24 ... 16 AWG
	Flexible without ferrule	0.2 ... 1.5 mm²	
	Flexible with twin ferrule	0.22 ... 1.5 mm²	24 ... 16 AWG
Rated current / Rated cross section		29 A / 4 mm²	20 A / 12 AWG
Rated short-time withstand current (1s)		480 A	
Short Circuit Current Rating (with specific conditions)			100 kA
Rated voltage		800 V	300 V
Impulse withstand voltage		8000 V	
Protection		IP20	NEMA 1
Increased safety Ex e		440 V 29 A IEC/EN 60079-7 - IM2 II 2 GD Ex eb I/II/IIIC – 300 V 20 A UL 60079-7 - Class I, Zone 1, AEx e II, Ex e II U	

Mounting instructions

Rail	TH 35-7.5, TH 35-15
Wire stripping length	10 mm 0.393 in
Tool	Flat screwdriver Ø 3.5 mm Ø 0.138 in
Torque	0.6 Nm ± 0.1 5.31 lb.in ± 0.885

The connecting capacity data for one Rigid: Solid/Stranded, or one Flexible conductor (when applicable) is a mandatory information required by IEC, UL and CSA standards (Copper conductors). All other data are provided as supplementary information only. For more details, please consult our CB, UL or CSA certificates and technical datasheet available on http://www.TE.com

CE, CB, RoHS, USR CNR, CSA, EAC Ex, ATEX, IECEx, BR-Ex e II, Haz Loc, BV, DNV, Rina

Accessories

	Description			Color	Type	Part Number		Pkg qty	Weight (1 pce) g
1	**End stops**	10 mm	0.394 in	Dark grey	BAZH1	1SNK900102R0000		20	24.00
2	**End sections**	2.55 mm	0.100 in	Dark grey	ES4-D2	1SNK505960R0000		20	4.10
3	**Jumper bars**	2 poles	32 A (IEC)	Orange	JB5-2	1SNK905302R0000		50	1.30
		3 poles	32 A (IEC)		JB5-3	1SNK905303R0000		50	2.00
		4 poles	32 A (IEC)		JB5-4	1SNK905304R0000		50	2.70
		5 poles	32 A (IEC)		JB5-5	1SNK905305R0000		50	3.50
		10 poles	32 A (IEC)		JB5-10	1SNK905310R0000		30	7.10
4	**Test adapters**	For test plugs DIA 2 mm 0.079 in		Dark grey	TP2	1SNK900203R0000		20	1.70
		For test plugs DIA 4 mm 0.157 in			TP4	1SNK900205R0000		20	2.40
5	**Test connectors**	5.2 mm 0.205 in spacing		Dark grey	TC5	1SNK900200R0000		10	5.20
		End module, 5.2 mm 0.205 in			TC5-R1	1SNK900201R0000		10	5.20
6	**Shield connectors**				SHB	1SNK900602R0000		20	4.90
7	**Label holders**			Dark grey	LH-J	1SNK900606R0000		100	0.73
8	**Terminal block markers**	Blank marker		White	MG-CPM 13 41790	1SNB041790R0512		1960	0.23
		Blank card			MC512	1SNK140000R0000		22	9.00
					MC512PA	1SNK149999R0000		20	10.00
		Universal wire markers holder		Grey	UMH	1SNK900611R0000		10	0.20

Complete list of accessories is indicated in the terminal block datasheet including end stops.
Some accessories such as jumper bars may modify the terminal block's ratings: Complete information available in the accessories section of the catalog.

1SNK161003S0201

Technical data valid for copper conductors only.

ZS4-D1 screw clamp terminal blocks

Double deck with 1 feed-through circuit - 5.2 mm 0.205 in spacing

4 mm²	
12 AWG	

Description

- Ease one potential distribution on 4 independent screw clamps,
- Save space by connecting conductors up to 4 mm² (CB certified) 12 AWG in just 5.2 mm 0.205 in spacing.

ZS4-D1

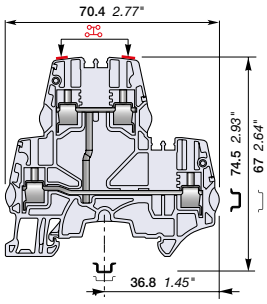

5.2 mm 0.205 in spacing

Ordering details

Description		Color	Type	Part Number		Pkg qty	Weight (1 pce) g
Feed-through	1 feed-through circuit	Grey	ZS4-D1	1SNK505211R0000		50	15.30

Main technical data

Connecting capacity		IEC	UL - CSA
1 conductor per clamp	Rigid: Solid/Stranded	0.2 ... 4 mm²	24 ... 12 AWG
	Flexible without ferrule	0.22 ... 4 mm²	
	Flexible with non insulated ferrule	0.22 ... 4 mm²	24 ... 12 AWG
	Flexible with insulated ferrule	0.22 ... 2.5 mm²	24 ... 14 AWG
	Gauge	A3-B3	
2 conductors per clamp	Rigid: Solid/Stranded	0.2 ... 1.5 mm²	24 ... 16 AWG
	Flexible without ferrule	0.2 ... 1.5 mm²	
	Flexible with twin ferrule	0.22 ... 1.5 mm²	24 ... 16 AWG
Rated current / Rated cross section		29 A / 4 mm²	20 A / 12 AWG
Rated short-time withstand current (1s)		480 A	
Short Circuit Current Rating (with specific conditions)			100 kA
Rated voltage		800 V	300 V
Impulse withstand voltage		8000 V	
Protection		IP20	NEMA 1
Increased safety Ex e		440 V 29 A IEC/EN 60079-7 - IM2 II 2 GD Ex eb I/II/IIIC – 300 V 20 A UL 60079-7 - Class I, Zone 1, AEx e II, Ex e II U	

The connecting capacity data for one Rigid: Solid/Stranded, or one Flexible conductor (when applicable) is a mandatory information required by IEC, UL and CSA standards (Copper conductors). All other data are provided as supplementary information only. For more details, please consult our CB, UL or CSA certificates and technical datasheet available on http://www.TE.com

CE, CB, RoHS, USR CNR, CSA, EAC Ex, ATEX, IECEx, BR-Ex e II, Haz Loc, BV, DNV, Rina

Mounting instructions

Rail	TH 35-7.5, TH 35-15
Wire stripping length	10 mm 0.393 in
Tool	Flat screwdriver Ø 3.5 mm Ø 0.138 in
Torque	0.6 Nm ± 0.1 5.31 lb.in ± 0.885

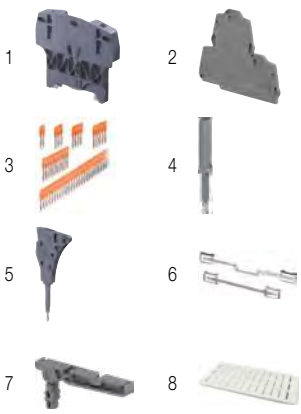

Accessories

	Description			Color	Type	Part Number		Pkg qty	Weight (1 pce) g
1	**End stops**	10 mm	0.394 in	Dark grey	BAZH1	1SNK900102R0000		20	24.00
2	**End sections**	2.55 mm	0.100 in	Dark grey	ES4-D2	1SNK505960R0000		20	4.10
3	**Jumper bars**	2 poles	32 A (IEC)	Orange	JB5-2	1SNK905302R0000		50	1.30
		3 poles	32 A (IEC)		JB5-3	1SNK905303R0000		50	2.00
		4 poles	32 A (IEC)		JB5-4	1SNK905304R0000		50	2.70
		5 poles	32 A (IEC)		JB5-5	1SNK905305R0000		50	3.50
		10 poles	32 A (IEC)		JB5-10	1SNK905310R0000		30	7.10
4	**Test adapters**	For test plugs DIA 2 mm 0.079 in		Dark grey	TP2	1SNK900203R0000		20	1.70
		For test plugs DIA 4 mm 0.157 in			TP4	1SNK900205R0000		20	2.40
5	**Test connectors**	5.2 mm 0.205 in spacing		Dark grey	TC5	1SNK900200R0000		10	5.20
		End module, 5.2 mm 0.205 in			TC5-R1	1SNK900201R0000		10	5.20
6	**Shield connectors**				SHB	1SNK900602R0000		20	4.90
7	**Label holders**			Dark grey	LH-J	1SNK900606R0000		100	0.73
8	**Terminal block markers**	Blank marker		White	MG-CPM 13 41790	1SNB041790R0512		1960	0.23
		Blank card			MC512	1SNK140000R0000		22	9.00
					MC512PA	1SNK149999R0000		20	10.00
		Universal wire markers holder		Grey	UMH	1SNK900611R0000		10	0.20

Complete list of accessories is indicated in the terminal block datasheet including end stops.
Some accessories such as jumper bars may modify the terminal block's ratings: Complete information available in the accessories section of the catalog.

1SNK161007S0201

Technical data valid for copper conductors only.

ZS6-D2 screw clamp terminal blocks

Double deck with 2 feed-through circuits - 6 mm 0.236 in spacing

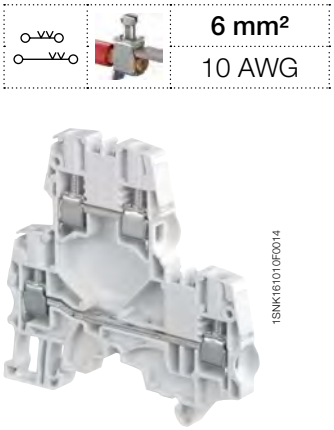

6 mm²
10 AWG

1SNK161010F0014

ZS6-D2

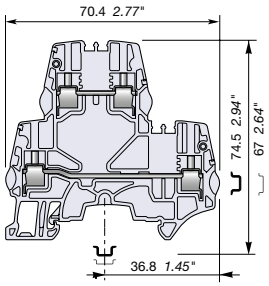

6 mm 0.236 in spacing

Description

- Save space with double deck terminal blocks: 2 independent circuits connected in just 6 mm 0.236 in spacing,
- Customize yourself the ZS6-D2 by soldering electronic components (up to 8.8 mm x 3.2 mm 0.346 x 0.125 in) in the existing linking bars punching,
- Boost the performances: ZS6-D... with ES4-D2 end section is rated 1000 V DC IEC, perfectly adapted to solar applications.

Ordering details

Description		Color	Type	Part Number		Pkg qty	Weight (1 pce) g
Feed-through	2 feed-through circuits	Grey	ZS6-D2	1SNK506210R0000		50	18.40
		Blue	ZS6-D2-BL	1SNK506220R0000		50	18.40
		Orange	ZS6-D2-OR	1SNK506230R0000		50	18.40
		Yellow	ZS6-D2-YL	1SNK506260R0000		50	18.40
		Red	ZS6-D2-RD	1SNK506262R0000		50	18.40
		White	ZS6-D2-WH	1SNK506265R0000		50	18.40
		Black	ZS6-D2-BK	1SNK506266R0000		50	18.40

Main technical data

Connecting capacity		IEC	UL - CSA
1 conductor per clamp	Rigid: Solid/Stranded	0.2 ... 6 mm²	24 ... 10 AWG
	Flexible without ferrule	0.2 ... 6 mm²	
	Flexible with non insulated ferrule	0.22 ... 4 mm²	24 ... 12 AWG
	Flexible with insulated ferrule	0.22 ... 4 mm²	24 ... 12 AWG
	Gauge	A4-B3	
2 conductors per clamp	Rigid: Solid/Stranded	0.2 ... 2.5 mm²	24 ... 14 AWG
	Flexible without ferrule	0.2 ... 2.5 mm²	
	Flexible with twin ferrule	0.22 ... 2.5 mm²	24 ... 14 AWG
Rated current / Rated cross section		40 A / 6 mm²	30 A / 10 AWG
Rated short-time withstand current (1s)		720 A	
Short Circuit Current Rating (with specific conditions)			100 kA
Rated voltage		800 V	300 V
Impulse withstand voltage		8000 V	
Protection		IP20	NEMA 1
Increased safety Ex e		440 V 40 A IEC/EN 60079-7 - IM2 II 2 GD Ex eb I/II/IIIC – 300 V 30 A UL 60079-7 - Class I, Zone 1, AEx e II, Ex e II U	

The connecting capacity data for one Rigid: Solid/Stranded, or one Flexible conductor (when applicable) is a mandatory information required by IEC, UL and CSA standards (Copper conductors). All other data are provided as supplementary information only. For more details, please consult our CB, UL or CSA certificates and technical datasheet available on http://www.TE.com

CE, CB, RoHS, USR CNR, CSA, EAC Ex, ATEX, IECEx, BR-Ex e II, Haz Loc, BV, DNV, Rina

Mounting instructions

Rail	TH 35-7.5, TH 35-15
Wire stripping length	10 mm 0.393 in
Tool	Flat screwdriver Ø 4 mm Ø 0.157 in
Torque	0.85 Nm ± 0.15 7.52 lb.in ± 1.33

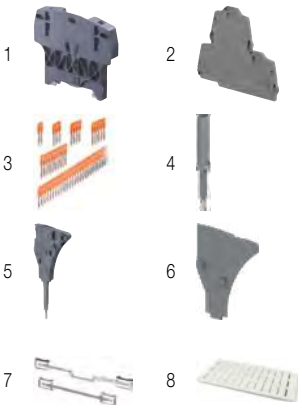

Accessories

	Description			Color	Type	Part Number		Pkg qty	Weight (1 pce) g
1	**End stops**	10 mm	0.394 in	Dark grey	BAZH1	1SNK900102R0000		20	24.00
2	**End sections**	2.55 mm	0.100 in	Dark grey	ES4-D2	1SNK505960R0000		20	4.10
3	**Jumper bars**	2 poles	41 A (IEC)	Orange	JB6-2	1SNK906302R0000		50	1.30
		3 poles	41 A (IEC)		JB6-3	1SNK906303R0000		50	2.10
		4 poles	41 A (IEC)		JB6-4	1SNK906304R0000		50	2.90
		5 poles	41 A (IEC)		JB6-5	1SNK906305R0000		50	3.60
		10 poles	41 A (IEC)		JB6-10	1SNK906310R0000		20	7.40
4	**Test adapters**	For test plugs DIA 2 mm 0.079 in		Dark grey	TP2	1SNK900203R0000		20	1.70
		For test plugs DIA 4 mm 0.157 in			TP4	1SNK900205R0000		20	2.40
5	**Test connectors**	End module, 5.2 mm 0.205 in		Dark grey	TC5-R1	1SNK900201R0000		10	5.20
6	**Spacers**	0.8 mm	0.031 in	Dark grey	ES-TC6	1SNK900105R0000		10	0.80
7	**Shield connectors**				SHB	1SNK900602R0000		20	4.90
8	**Terminal block markers**	Blank marker		White	MG-CPM 13 41791	1SNB041791R0612		1680	0.27
		Blank card			MC612	1SNK150000R0000		22	10.00
					MC612PA	1SNK159999R0000		20	11.00
		Universal wire markers holder		Grey	UMH	1SNK900611R0000		10	0.20

Complete list of accessories is indicated in the terminal block datasheet including end stops.
Some accessories such as jumper bars may modify the terminal block's ratings: Complete information available in the accessories section of the catalog.

Ground screw clamp terminal blocks

Description		Color	Type	Part Number		Pkg qty	Weight (1 pce) g
Ground	Profile aligned with ZS6-D2 and ZS6-D1	Green-yellow	ZS6-D1-PE	1SNK506250R0000		20	18.40

1SNK161014S0201

Technical data valid for copper conductors only.

ZS6-D1 screw clamp terminal blocks

Double deck with 1 feed-through circuit - 6 mm 0.236 in spacing

ZS6-D1

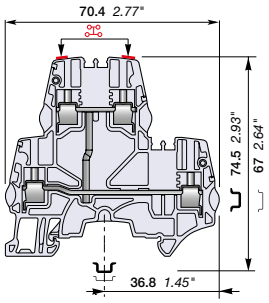

6 mm 0.236 in spacing

6 mm²
10 AWG

Description

- Ease one potential distribution on 4 independent screw clamps,
- Save space by connecting conductors up to 6 mm² 10 AWG in just 6 mm 0.236 in spacing,
- Boost the performances: ZS6-D... with ES4-D2 end section is rated 1000 V DC IEC, perfectly adapted to solar applications.

Ordering details

Description		Color	Type	Part Number		Pkg qty	Weight (1 pce) g
Feed-through	1 feed-through circuit	Grey	ZS6-D1	1SNK506211R0000		50	18.40
		Red	ZS6-D1-RD	1SNK506214R0000		50	18.40

Main technical data

Connecting capacity		IEC	UL - CSA
1 conductor per clamp	Rigid: Solid/Stranded	0.2 ... 6 mm²	24 ... 10 AWG
	Flexible without ferrule	0.2 ... 6 mm²	
	Flexible with non insulated ferrule	0.22 ... 4 mm²	24 ... 12 AWG
	Flexible with insulated ferrule	0.22 ... 4 mm²	24 ... 12 AWG
	Gauge	A4-B3	
2 conductors per clamp	Rigid: Solid/Stranded	0.2 ... 2.5 mm²	24 ... 14 AWG
	Flexible without ferrule	0.2 ... 2.5 mm²	
	Flexible with twin ferrule	0.22 ... 2.5 mm²	24 ... 14 AWG
Rated current / Rated cross section		40 A / 6 mm²	30 A / 10 AWG
Rated short-time withstand current (1s)		720 A	
Short Circuit Current Rating (with specific conditions)			100 kA
Rated voltage		800 V	300 V
Impulse withstand voltage		8000 V	
Protection		IP20	NEMA 1
Increased safety Ex e		440 V 40 A IEC/EN 60079-7 - IM2 II 2 GD Ex eb I/II/IIIC – 300 V 30 A UL 60079-7 - Class I, Zone 1, AEx e II, Ex e II U	

The connecting capacity data for one Rigid: Solid/Stranded, or one Flexible conductor (when applicable) is a mandatory information required by IEC, UL and CSA standards (Copper conductors). All other data are provided as supplementary information only. For more details, please consult our CB, UL or CSA certificates and technical datasheet available on http://www.TE.com

CE, CB, RoHS, USR CNR, CSA, EAC Ex, ATEX, IECEx, BR-Ex e II, Haz Loc, BV, DNV, Rina

Mounting instructions

Rail		TH 35-7.5, TH 35-15
Wire stripping length		10 mm 0.393 in
Tool		Flat screwdriver Ø 4 mm Ø 0.157 in
Torque		0.85 Nm ± 0.15 7.52 lb.in ± 1.33

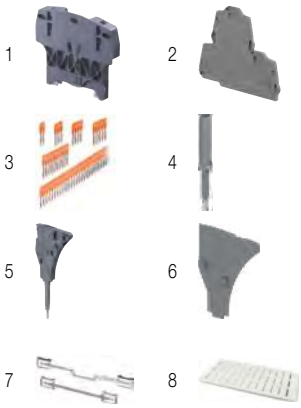

Accessories

	Description			Color	Type	Part Number		Pkg qty	Weight (1 pce) g
1	**End stops**	10 mm	0.394 in	Dark grey	BAZH1	1SNK900102R0000		20	24.00
2	**End sections**	2.55 mm	0.100 in	Dark grey	ES4-D2	1SNK505960R0000		20	4.10
3	**Jumper bars**	2 poles	41 A (IEC)	Orange	JB6-2	1SNK906302R0000		50	1.30
		3 poles	41 A (IEC)		JB6-3	1SNK906303R0000		50	2.10
		4 poles	41 A (IEC)		JB6-4	1SNK906304R0000		50	2.90
		5 poles	41 A (IEC)		JB6-5	1SNK906305R0000		50	3.60
		10 poles	41 A (IEC)		JB6-10	1SNK906310R0000		20	7.40
4	**Test adapters**	For test plugs DIA 2 mm 0.079 in		Dark grey	TP2	1SNK900203R0000		20	1.70
		For test plugs DIA 4 mm 0.157 in			TP4	1SNK900205R0000		20	2.40
5	**Test connectors**	End module, 5.2 mm 0.205 in		Dark grey	TC5-R1	1SNK900201R0000		10	5.20
6	**Spacers**	0.8 mm	0.031 in	Dark grey	ES-TC6	1SNK900105R0000		10	0.80
7	**Shield connectors**				SHB	1SNK900602R0000		20	4.90
8	**Terminal block markers**	Blank marker		White	MG-CPM 13 41791	1SNB041791R0612		1680	0.27
		Blank card			MC612	1SNK150000R0000		22	10.00
					MC612PA	1SNK159999R0000		20	11.00
		Universal wire markers holder		Grey	UMH	1SNK900611R0000		10	0.20

Complete list of accessories is indicated in the terminal block datasheet including end stops.
Some accessories such as jumper bars may modify the terminal block's ratings: Complete information available in the accessories section of the catalog.

1SNK161013S0201

Technical data valid for copper conductors only.

ZS6-D2-PE screw clamp terminal blocks

Double deck with 1 feed-through circuit and 1 ground circuit - 6 mm 0.236 in spacing

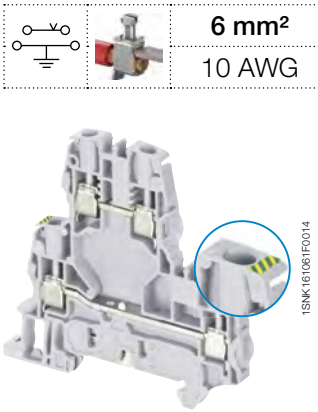

ZS6-D2-PE

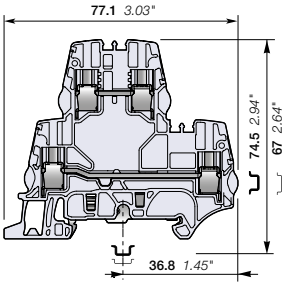

6 mm 0.236 in spacing

6 mm²
10 AWG

Description

- Save space with ZS6-D2-PE terminal blocks: 1 feed-through circuit and 1 ground circuit in just 6 mm 0.236 in spacing,
- Customize yourself the ZS6-D2-PE terminal blocks by soldering electronic components (up to 8.8 mm x 3.2 mm 0.346 x 0.125 in) in the existing linking bars punching.

Ordering details

Description		Color	Type	Part Number		Pkg qty	Weight (1 pce) g
Feed-through + ground	1 feed-through circuit and 1 ground circuit	Grey	ZS6-D2-PE	1SNK506212R0000		50	18.40

Main technical data

Connecting capacity		IEC	UL - CSA
1 conductor per clamp	Rigid: Solid/Stranded	0.2 ... 6 mm²	24 ... 10 AWG
	Flexible without ferrule	0.22 ... 6 mm²	
	Flexible with non insulated ferrule	0.22 ... 4 mm²	24 ... 12 AWG
	Flexible with insulated ferrule	0.22 ... 4 mm²	24 ... 12 AWG
	Gauge	A4-B3	
2 conductors per clamp	Rigid: Solid/Stranded	0.2 ... 2.5 mm²	24 ... 14 AWG
	Flexible without ferrule	0.2 ... 2.5 mm²	
	Flexible with twin ferrule	0.22 ... 2.5 mm²	24 ... 14 AWG
Rated current / Rated cross section		41 A / 6 mm²	30 A / 10 AWG
Rated short-time withstand current (1s)		720 A	
Short Circuit Current Rating (with specific conditions)			
Rated voltage		800 V	300 V
Impulse withstand voltage		8000 V	
Protection		IP20	NEMA 1

Mounting instructions

Rail	TH 35-7.5, TH 35-15
Wire stripping length	10 mm 0.393 in
Tool	Flat screwdriver Ø 4 mm Ø 0.157 in
Torque	0.85 Nm ± 0.15 7.52 lb.in ± 1.33

The connecting capacity data for one Rigid: Solid/Stranded, or one Flexible conductor (when applicable) is a mandatory information required by IEC, UL and CSA standards (Copper conductors). All other data are provided as supplementary information only. For more details, please consult our CB, UL or CSA certificates and technical datasheet available on http://www.TE.com

CE CB RoHS USR CSA EAC BV DNV

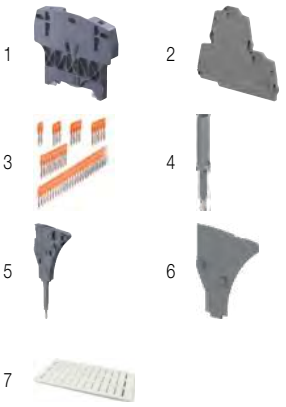

Accessories

	Description			Color	Type	Part Number		Pkg qty	Weight (1 pce) g
1	**End stops**	10 mm	0.394 in	Dark grey	BAZH1	1SNK900102R0000		20	24.00
2	**End sections**	2.55 mm	0.100 in	Dark grey	ES4-D2	1SNK505960R0000		20	4.10
3	**Jumper bars**	2 poles	41 A (IEC)	Orange	JB6-2	1SNK906302R0000		50	1.30
		3 poles	41 A (IEC)		JB6-3	1SNK906303R0000		50	2.10
		4 poles	41 A (IEC)		JB6-4	1SNK906304R0000		50	2.90
		5 poles	41 A (IEC)		JB6-5	1SNK906305R0000		50	3.60
		10 poles	41 A (IEC)		JB6-10	1SNK906310R0000		20	7.40
4	**Test adapters**	For test plugs DIA 4 mm 0.157 in		Dark grey	TP4	1SNK900205R0000		20	2.40
5	**Test connectors**	End module, 5.2 mm 0.205 in		Dark grey	TC5-R1	1SNK900201R0000		10	5.20
6	**Spacers**	0.8 mm	0.031 in	Dark grey	ES-TC6	1SNK900105R0000		10	0.80
7	**Terminal block markers**	Blank marker		White	MG-CPM 13 41791	1SNB041791R0612		1680	0.27
		Blank card			MC612	1SNK150000R0000		22	10.00
					MC612PA	1SNK159999R0000		20	11.00
		Universal wire markers holder		Grey	UMH	1SNK900611R0000		10	0.20

Complete list of accessories is indicated in the terminal block datasheet including end stops.
Some accessories such as jumper bars may modify the terminal block's ratings: Complete information available in the accessories section of the catalog.

Feed-through screw clamp terminal blocks

Description		Color	Type	Part Number		Pkg qty	Weight (1 pce) g
Feed-through	2 feed-through circuits	Grey	ZS6-D2	1SNK506210R0000		50	18.40

1SNK161048S0201

Technical data valid for copper conductors only.

ZS6-D1-PE screw clamp terminal blocks

Double deck with 1 ground circuit - 6 mm 0.236 in spacing

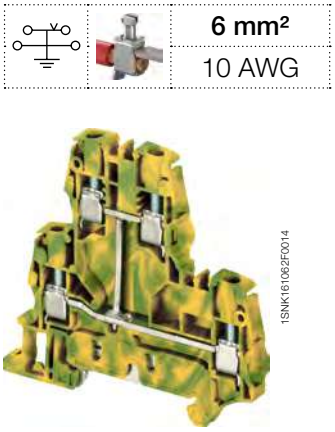

6 mm²	
10 AWG	

1SNK161062F0014

ZS6-D1-PE

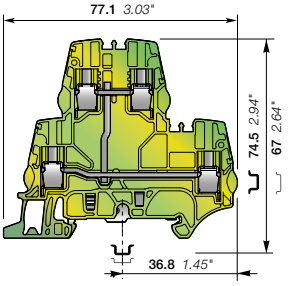

6 mm 0.236 in spacing

Description

- Save space with double deck ground terminal blocks aligned with ZS6-D2 double deck terminal blocks for convenient cabling process and circuit configuration,
- Benefit from our screwless rail connection: non operator independant, secured snap on or remove from the rail, performances above the requirements of IEC 60947-7-2 standard.

Ordering details

Description		Color	Type	Part Number		Pkg qty	Weight (1 pce) g
Ground	1 ground circuit	Green-yellow	ZS6-D1-PE	1SNK506250R0000		20	18.40

Main technical data

Connecting capacity		IEC	UL - CSA
1 conductor per clamp	Rigid: Solid/Stranded	0.2 ... 6 mm²	24 ... 10 AWG
	Flexible without ferrule	0.22 ... 6 mm²	
	Flexible with non insulated ferrule	0.22 ... 4 mm²	24 ... 12 AWG
	Flexible with insulated ferrule	0.22 ... 4 mm²	24 ... 12 AWG
	Gauge	A4-B3	
Rated cross section		6 mm²	10 AWG
Rated short-time withstand current (1s)		720 A	
Protection		IP20	NEMA 1

Mounting instructions

Rail	TH 35-7.5, TH 35-15
Wire stripping length	10 mm 0.393 in
Tool	Flat screwdriver Ø 4 mm Ø 0.157 in
Torque	0.85 Nm ± 0.15 7.52 lb.in ± 1.33

The connecting capacity data for one Rigid: Solid/Stranded, or one Flexible conductor (when applicable) is a mandatory information required by IEC, UL and CSA standards (Copper conductors). All other data are provided as supplementary information only. For more details, please consult our CB, UL or CSA certificates and technical datasheet available on http://www.TE.com

CE CB RoHS USR CSA EAC BV DNV

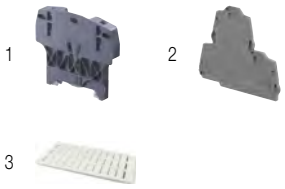

Accessories

	Description			Color	Type	Part Number		Pkg qty	Weight (1 pce) g
1	**End stops**	10 mm	0.394 in	Dark grey	BAZH1	1SNK900102R0000		20	24.00
2	**End sections**	2.55 mm	0.100 in	Dark grey	ES4-D2	1SNK505960R0000		20	4.10
3	**Terminal block markers**	Blank marker		White	MG-CPM 13 41791	1SNB041791R0612		1680	0.27
		Blank card			MC612	1SNK150000R0000		22	10.00
					MC612PA	1SNK159999R0000		20	11.00
		Universal wire markers holder		Grey	UMH	1SNK900611R0000		10	0.20

Complete list of accessories is indicated in the terminal block datasheet including end stops.
Some accessories such as jumper bars may modify the terminal block's ratings: Complete information available in the accessories section of the catalog.

1SNK161049S0201

Technical data valid for copper conductors only.

ZS4-D2-S screw clamp terminal blocks

Double deck with 1 disconnect circuit and 1 feed-through circuit - 5.2 mm 0.205 in spacing

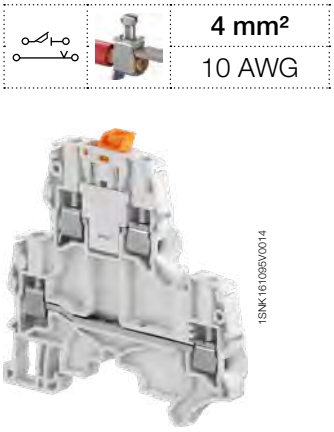

4 mm²	
10 AWG	

ZS4-D2-S

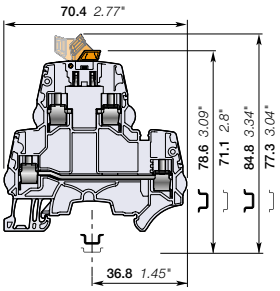

5.2 mm 0.205 in spacing

Description

- Save space: connect one complete circuit on a single block featuring disconnect and feed-through for the return circuit in just 5.2 mm 0.205 in spacing,
- Same profile as ZS4-D... double deck terminal blocks: convenient cabling process, aligned jumpers, markers and common end section.

Ordering details

Description		Color	Type	Part Number		Pkg qty	Weight (1 pce) g
Feed-through + disconnect	1 disconnect circuit and 1 feed-through circuit	Grey	ZS4-D2-S	1SNK505315R0000		50	15.90

Main technical data

Connecting capacity		IEC	UL - CSA
1 conductor per clamp	Rigid: Solid/Stranded	0.2 ... 4 mm²	24 ... 10 AWG
	Flexible without ferrule	0.22 ... 4 mm²	
	Flexible with non insulated ferrule	0.22 ... 4 mm²	24 ... 12 AWG
	Flexible with insulated ferrule	0.22 ... 2.5 mm²	24 ... 14 AWG
	Gauge	A3-B3	
2 conductors per clamp	Rigid: Solid/Stranded	0.2 ... 1.5 mm²	24 ... 16 AWG
	Flexible without ferrule	0.2 ... 1.5 mm²	
	Flexible with twin ferrule	0.22 ... 1.5 mm²	24 ... 16 AWG
Disconnect circuit			
Rated current / Rated cross section		25 A / 4 mm²	27 A / 10 AWG
Feed-through circuit			
Rated current / Rated cross section		29 A / 4 mm²	27 A / 10 AWG
Rated short-time withstand current (1s)		480 A	
Rated voltage		630 V	300 V
Impulse withstand voltage		8000 V	
Protection		IP20	NEMA 1

Mounting instructions

Rail		TH 35-7.5, TH 35-15
Wire stripping length		10.5 mm 0.413 in
Tool		Flat screwdriver Ø 3.5 mm Ø 0.138 in
Torque		0.6 Nm ± 0.1 5.31 lb.in ± 0.885

Recommendation for best usage: in horizontal assemblies, disconnect terminal blocks should be mounted with fixed foot on top (power side) so that the disconnect knife does not partially close through gravity. Furthermore, as specified per IEC 60947-7-1, disconnect terminal blocks are intended to be used for temporary disconnection at zero potential and at no load.

The connecting capacity data for one Rigid: Solid/Stranded, or one Flexible conductor (when applicable) is a mandatory information required by IEC, UL and CSA standards (Copper conductors). All other data are provided as supplementary information only. For more details, please consult our CB, UL or CSA certificates and technical datasheet available on http://www.TE.com

CE CB RoHS USR CSA EAC BV DNV

Accessories

	Description			Color	Type	Part Number		Pkg qty	Weight (1 pce) g
1	**End stops**	10 mm	0.394 in	Dark grey	BAZH1	1SNK900102R0000		20	24.00
2	**End sections**	2.55 mm	0.100 in	Dark grey	ES4-D2	1SNK505960R0000		20	4.10
3	**Jumper bars**	2 poles	32 A (IEC)	Orange	JB5-2	1SNK905302R0000		50	1.30
		3 poles	32 A (IEC)		JB5-3	1SNK905303R0000		50	2.00
		4 poles	32 A (IEC)		JB5-4	1SNK905304R0000		50	2.70
		5 poles	32 A (IEC)		JB5-5	1SNK905305R0000		50	3.50
		10 poles	32 A (IEC)		JB5-10	1SNK905310R0000		30	7.10
		50 poles	32 A (IEC)		JB5-50	1SNK905350R0000		10	36.00
4	**Test adapters**	For test plugs DIA 2 mm 0.079 in		Dark grey	TP2	1SNK900203R0000		20	1.70
		For test plugs DIA 4 mm 0.157 in			TP4	1SNK900205R0000		20	2.40
5	**Shield connectors**				SHB	1SNK900602R0000		20	4.90
6	**Terminal block markers**	Blank marker		White	MG-CPM 13 41790	1SNB041790R0512		1960	0.23
		Blank card			MC512	1SNK140000R0000		22	9.00
					MC512PA	1SNK149999R0000		20	10.00
		Universal wire markers holder		Grey	UMH	1SNK900611R0000		10	0.20

Complete list of accessories is indicated in the terminal block datasheet including end stops.
Some accessories such as jumper bars may modify the terminal block's ratings: Complete information available in the accessories section of the catalog.

1SNK161074S0201

Technical data valid for copper conductors only.

ZS4-D2-S-T screw clamp terminal blocks

Double deck with 1 disconnect circuit with test socket screws and 1 feed-through circuit - 5.2 mm 0.205 in spacing

4 mm²
10 AWG

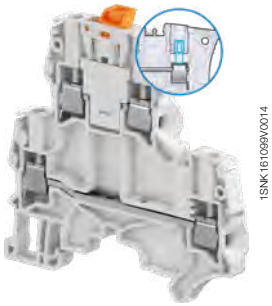

ZS4-D2-S-T

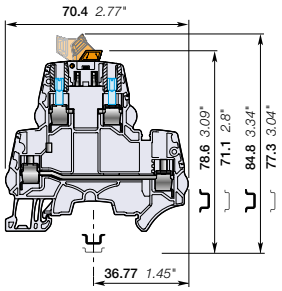

5.2 mm 0.205 in spacing

Description

Find the same functionalities as ZS4-D2-S, upgraded with the two built-in test socket screws meant to ease your signal testing during commissioning and maintenance.

Ordering details

Description		Color	Type	Part Number		Pkg qty	Weight (1 pce) g
Feed-through + disconnect	1 disconnect circuit with 2 test socket screws and 1 feed-through circuit	Grey	ZS4-D2-S-T2	1SNK505316R0000		50	16.20

Main technical data

Connecting capacity		IEC	UL - CSA
1 conductor per clamp	Rigid: Solid/Stranded	0.2 ... 4 mm²	24 ... 10 AWG
	Flexible without ferrule	0.22 ... 4 mm²	
	Flexible with non insulated ferrule	0.22 ... 4 mm²	24 ... 12 AWG
	Flexible with insulated ferrule	0.22 ... 2.5 mm²	24 ... 14 AWG
	Gauge	A3-B3	
2 conductors per clamp	Rigid: Solid/Stranded	0.2 ... 1.5 mm²	24 ... 16 AWG
	Flexible without ferrule	0.2 ... 1.5 mm²	
	Flexible with twin ferrule	0.22 ... 1.5 mm²	24 ... 16 AWG
Disconnect circuit			
Rated current / Rated cross section		25 A / 4 mm²	27 A / 10 AWG
Feed-through circuit			
Rated current / Rated cross section		29 A / 4 mm²	27 A / 10 AWG
Rated short-time withstand current (1s)		480 A	
Rated voltage		630 V	300 V
Impulse withstand voltage		8000 V	
Protection		IP20	NEMA 1

Mounting instructions

Rail		TH 35-7.5, TH 35-15
Wire stripping length		10.5 mm 0.413 in
Tool		Flat screwdriver Ø 3.5 mm Ø 0.138 in
Torque		0.6 Nm ± 0.1 5.31 lb.in ± 0.885

Recommendation for best usage: in horizontal assemblies, disconnect terminal blocks should be mounted with fixed foot on top (power side) so that the disconnect knife does not partially close through gravity. Furthermore, as specified per IEC 60947-7-1, disconnect terminal blocks are intended to be used for temporary disconnection at zero potential and at no load.

The connecting capacity data for one Rigid: Solid/Stranded, or one Flexible conductor (when applicable) is a mandatory information required by IEC, UL and CSA standards (Copper conductors). All other data are provided as supplementary information only. For more details, please consult our CB, UL or CSA certificates and technical datasheet available on http://www.TE.com

CE | CB | RoHS | USR | CSA | EAC | BV | DNV

Accessories

	Description			Color	Type	Part Number		Pkg qty	Weight (1 pce) g
1	**End stops**	10 mm	0.394 in	Dark grey	BAZH1	1SNK900102R0000		20	24.00
2	**End sections**	2.55 mm	0.100 in	Dark grey	ES4-D2	1SNK505960R0000		20	4.10
3	**Jumper bars**	2 poles	32 A (IEC)	Orange	JB5-2	1SNK905302R0000		50	1.30
		3 poles	32 A (IEC)		JB5-3	1SNK905303R0000		50	2.00
		4 poles	32 A (IEC)		JB5-4	1SNK905304R0000		50	2.70
		5 poles	32 A (IEC)		JB5-5	1SNK905305R0000		50	3.50
		10 poles	32 A (IEC)		JB5-10	1SNK905310R0000		30	7.10
		50 poles	32 A (IEC)		JB5-50	1SNK905350R0000		10	36.00
4	**Test adapters**	For test plugs DIA 2 mm 0.079 in		Dark grey	TP2	1SNK900203R0000		20	1.70
		For test plugs DIA 4 mm 0.157 in			TP4	1SNK900205R0000		20	2.40
5	**Shield connectors**				SHB	1SNK900602R0000		20	4.90
6	**Terminal block markers**	Blank marker		White	MG-CPM 13 41790	1SNB041790R0512		1960	0.23
		Blank card			MC512	1SNK140000R0000		22	9.00
					MC512PA	1SNK149999R0000		20	10.00
		Universal wire markers holder		Grey	UMH	1SNK900611R0000		10	0.20

Complete list of accessories is indicated in the terminal block datasheet including end stops.
Some accessories such as jumper bars may modify the terminal block's ratings: Complete information available in the accessories section of the catalog.

1SNK161075S0201

Technical data valid for copper conductors only.

ZS4-D2-SF1 screw clamp terminal blocks

Double deck with 1 fuse circuit and 1 feed-through circuit - 8 mm 0.315 in spacing

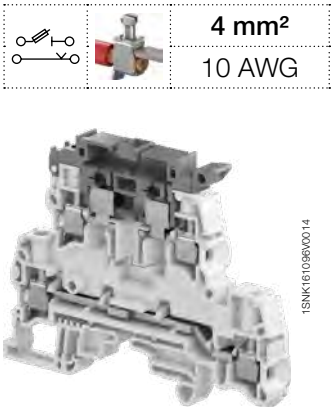

4 mm²
10 AWG

ZS4-D2-SF1

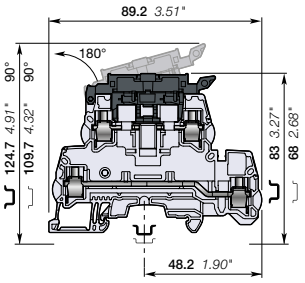

8 mm 0.315 in spacing

Description

- Save space: connect one complete circuit on a single block featuring fuse and feed-through for the return circuit,
- Protect your circuit with either 5X20 or 5X25 fuse (fuse not supplied with the terminal blocks),
- High performances product: compliant with IEC 60947-7-3 standard and jumper channel for the feed-through circuit.

Ordering details

Description		Color	Type	Part Number		Pkg qty	Weight (1 pce) g
Feed-through + fuse	1 fuse circuit and 1 feed-through circuit	Grey, dark grey	ZS4-D2-SF1	1SNK508425R0000		50	27.50

Main technical data

Connecting capacity		IEC	UL - CSA
1 conductor per clamp	Rigid: Solid/Stranded	0.2 ... 6 mm²	24 ... 10 AWG
	Flexible without ferrule	0.22 ... 4 mm²	
	Flexible with non insulated ferrule	0.22 ... 4 mm²	24 ... 12 AWG
	Flexible with insulated ferrule	0.22 ... 4 mm²	24 ... 12 AWG
	Gauge	A3-B3	
2 conductors per clamp	Rigid: Solid/Stranded	0.2 ... 2.5 mm²	24 ... 14 AWG
	Flexible without ferrule	0.2 ... 2.5 mm²	
	Flexible with twin ferrule	0.22 ... 2.5 mm²	24 ... 14 AWG
Disconnect circuit Rated current / Rated cross section		6.3 A / 4 mm²	12 A / 10 AWG
Feed-through circuit Rated current / Rated cross section		32 A / 4 mm²	30 A / 10 AWG
Rated voltage		800 V	300 V
Impulse withstand voltage		8000 V	
Protection		IP20	NEMA 1

Mounting instructions

Rail	TH 35-7.5, TH 35-15
Wire stripping length	11 mm 0.433 in
Tool	Flat screwdriver Ø 3.5 mm Ø 0.138 in
Torque	0.6 Nm ± 0.1 5.31 lb.in ± 0.885

Separate arrangement		Assembly composed of 1 fuse terminal block in between non fuse terminal blocks	Overload and short-circuit protection	2.5 W
			Exclusive short-circuit protection	4 W
Compound arrangement		Assembly composed of 5 fuse terminal blocks	Overload and short-circuit protection	1.6 W
			Exclusive short-circuit protection	4 W

The connecting capacity data for one Rigid: Solid/Stranded, or one Flexible conductor (when applicable) is a mandatory information required by IEC, UL and CSA standards (Copper conductors). All other data are provided as supplementary information only. For more details, please consult our CB, UL or CSA certificates and technical datasheet available on http://www.TE.com

CE CB RoHS USR CSA EAC BV DNV

Accessories

	Description			Color	Type	Part Number		Pkg qty	Weight (1 pce) g
1	**End stops**	10 mm	0.394 in	Dark grey	BAZH1	1SNK900102R0000		20	24.00
2	**End sections**	2.5 mm	0.098 in	Dark grey	ES4-D2-SF1	1SNK508911R0000		20	5.00
3	**Jumper bars**	2 poles	57 A (IEC)	Orange	JB8-2	1SNK908302R0000		50	2.70
		3 poles	57 A (IEC)		JB8-3	1SNK908303R0000		50	4.10
		4 poles	57 A (IEC)		JB8-4	1SNK908304R0000		50	5.60
		5 poles	57 A (IEC)		JB8-5	1SNK908305R0000		40	7.00
		10 poles	57 A (IEC)		JB8-10	1SNK908310R0000		20	14.20
4	**Lateral jumper bars**	10 poles	35 A (IEC)	Grey	PC81-10	1SNA173523R1100		10	5.00
5	**Test adapters**	For test plugs DIA 2 mm 0.079 in		Dark grey	TP2	1SNK900203R0000		20	1.70
		For test plugs DIA 4 mm 0.157 in			TP4	1SNK900205R0000		20	2.40
6	**Test connectors**	5.2 mm 0.205 in spacing		Dark grey	TC5	1SNK900200R0000		10	5.20
		End module, 5.2 mm 0.205 in			TC5-R1	1SNK900201R0000		10	5.20
7	**Spacers**	2.8 mm	0.110 in	Dark grey	ES-TC8	1SNK900104R0000		10	1.40
8	**Assembly rods**	2 poles			TGA8	1SNA168672R1100		10	1.00
		3 poles			TGA8	1SNA168673R1200		10	1.50
		4 poles			TGA8	1SNA168674R1300		10	2.00
9	**Terminal block markers**	Blank marker		White	MG-CPM 13 41791	1SNB041791R0612		1680	0.27
		Blank card			MC812	1SNK160000R0000		22	10.00
					MC812PA	1SNK169999R0000		20	14.00
		Universal wire markers holder		Grey	UMH	1SNK900611R0000		10	0.20

Complete list of accessories is indicated in the terminal block datasheet including end stops.
Some accessories such as jumper bars may modify the terminal block's ratings: Complete information available in the accessories section of the catalog.

1SNK161076S0201

Technical data valid for copper conductors only.

ZS4-D2-SF1-R screw clamp terminal blocks

Double deck with 1 fuse circuit with blown fuse indicator and 1 feed-through circuit - 8 mm 0.315 in spacing

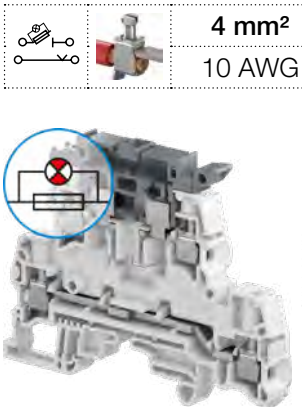

1SNK161097V0014

ZS4-D2-SF1-R

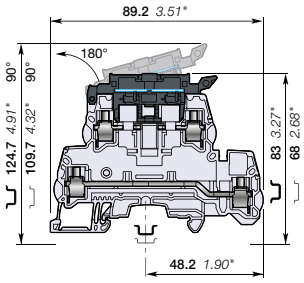

8 mm 0.315 in spacing

4 mm²
10 AWG

Description

- Find the same functionalities as ZS4-D2-SF1, upgraded with our integrated blown fuse indicator (with leakage current < 0.5 mA),
- Only one part number needed to fit AC / DC 24 V up to 110 V.

Ordering details

Description		Color	Type	Part Number		Pkg qty	Weight (1 pce) g
Feed-through + fuse	1 fuse circuit with blown fuse indicator 115 ... 250 V AC / DC and 1 feed-through circuit	Grey, dark grey	ZS4-D2-SF1-R3	1SNK508424R0000		50	29.40
	1 fuse circuit with blown fuse indicator 24 ... 110 V AC / DC and 1 feed-through circuit		ZS4-D2-SF1-R1	1SNK508423R0000		50	29.40

Main technical data

Connecting capacity		IEC	UL - CSA
1 conductor per clamp	Rigid: Solid/Stranded	0.2 ... 6 mm²	24 ... 10 AWG
	Flexible without ferrule	0.22 ... 4 mm²	
	Flexible with non insulated ferrule	0.22 ... 4 mm²	24 ... 12 AWG
	Flexible with insulated ferrule	0.22 ... 4 mm²	24 ... 12 AWG
	Gauge	A3-B3	
2 conductors per clamp	Rigid: Solid/Stranded	0.2 ... 2.5 mm²	24 ... 14 AWG
	Flexible without ferrule	0.2 ... 2.5 mm²	
	Flexible with twin ferrule	0.22 ... 2.5 mm²	24 ... 14 AWG
Disconnect circuit Rated current / Rated cross section		6.3 A / 4 mm²	12 A / 10 AWG
Feed-through circuit Rated current / Rated cross section		32 A / 4 mm²	30 A / 10 AWG
Rated voltage		800 V	300 V
Impulse withstand voltage		8000 V	
Protection		IP20	NEMA 1

Mounting instructions

Rail	TH 35-7.5, TH 35-15
Wire stripping length	11 mm 0.433 in
Tool	Flat screwdriver Ø 3.5 mm Ø 0.138 in
Torque	0.6 Nm ± 0.1 5.31 lb.in ± 0.885

Separate arrangement		Assembly composed of 1 fuse terminal block in between non fuse terminal blocks	Overload and short-circuit protection	2.5 W
			Exclusive short-circuit protection	4 W
Compound arrangement		Assembly composed of 5 fuse terminal blocks	Overload and short-circuit protection	1.6 W
			Exclusive short-circuit protection	4 W

The connecting capacity data for one Rigid: Solid/Stranded, or one Flexible conductor (when applicable) is a mandatory information required by IEC, UL and CSA standards (Copper conductors).
All other data are provided as supplementary information only. For more details, please consult our CB, UL or CSA certificates and technical datasheet available on http://www.TE.com

CE CB RoHS USR CSA EAC BV DNV

Accessories

	Description			Color	Type	Part Number		Pkg qty	Weight (1 pce) g
1	**End stops**	10 mm	0.394 in	Dark grey	BAZH1	1SNK900102R0000		20	24.00
2	**End sections**	2.5 mm	0.098 in	Dark grey	ES4-D2-SF1	1SNK508911R0000		20	5.00
3	**Jumper bars**	2 poles	57 A (IEC)	Orange	JB8-2	1SNK908302R0000		50	2.70
		3 poles	57 A (IEC)		JB8-3	1SNK908303R0000		50	4.10
		4 poles	57 A (IEC)		JB8-4	1SNK908304R0000		50	5.60
		5 poles	57 A (IEC)		JB8-5	1SNK908305R0000		40	7.00
		10 poles	57 A (IEC)		JB8-10	1SNK908310R0000		20	14.20
4	**Lateral jumper bars**	10 poles	35 A (IEC)	Grey	PC81-10	1SNA173523R1100		10	5.00
5	**Test adapters**	For test plugs DIA 2 mm 0.079 in		Dark grey	TP2	1SNK900203R0000		20	1.70
		For test plugs DIA 4 mm 0.157 in			TP4	1SNK900205R0000		20	2.40
6	**Test connectors**	5.2 mm 0.205 in spacing		Dark grey	TC5	1SNK900200R0000		10	5.20
		End module, 5.2 mm 0.205 in			TC5-R1	1SNK900201R0000		10	5.20
7	**Spacers**	2.8 mm	0.110 in	Dark grey	ES-TC8	1SNK900104R0000		10	1.40
8	**Assembly rods**	2 poles			TGA8	1SNA168672R1100		10	1.00
		3 poles			TGA8	1SNA168673R1200		10	1.50
		4 poles			TGA8	1SNA168674R1300		10	2.00
9	**Terminal block markers**	Blank marker		White	MG-CPM 13 41791	1SNB041791R0612		1680	0.27
		Blank card			MC812	1SNK160000R0000		22	10.00
					MC812PA	1SNK169999R0000		20	14.00
		Universal wire markers holder		Grey	UMH	1SNK900611R0000		10	0.20

Complete list of accessories is indicated in the terminal block datasheet including end stops.
Some accessories such as jumper bars may modify the terminal block's ratings: Complete information available in the accessories section of the catalog.

1SNK161077S0201

Technical data valid for copper conductors only.

ZS4-T3 screw clamp terminal blocks

Triple deck with 3 feed-through circuits - 5.2 mm 0.205 in spacing

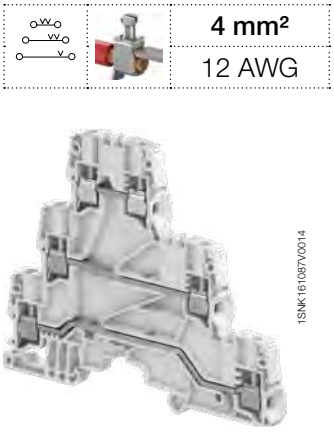

4 mm²	
12 AWG	

1SNK161087V0014

ZS4-T3

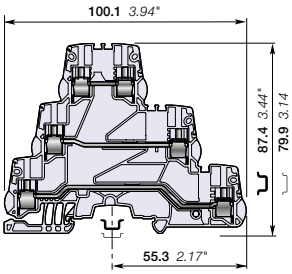

5.2 mm 0.205 in spacing

Description

Save space: 3 independent circuits in just 5.2 mm 0.205 in spacing,

– Fit many applications: space constraints, multiple signals distribution, sensors distribution, thanks to the jumper channels available on each deck.

Ordering details

Description		Color	Type	Part Number		Pkg qty	Weight (1 pce) g
Feed-through	3 feed-through circuits	Grey	ZS4-T3	1SNK505212R0000		25	24.40

Main technical data

Connecting capacity		IEC	UL - CSA
1 conductor per clamp	Rigid: Solid/Stranded	0.2 ... 4 mm²	24 ... 12 AWG
	Flexible without ferrule	0.22 ... 4 mm²	
	Flexible with non insulated ferrule	0.22 ... 4 mm²	24 ... 12 AWG
	Flexible with insulated ferrule	0.22 ... 2.5 mm²	24 ... 14 AWG
	Gauge	A3-B3	
2 conductors per clamp	Rigid: Solid/Stranded	0.2 ... 1.5 mm²	24 ... 16 AWG
	Flexible without ferrule	0.2 ... 1.5 mm²	
	Flexible with twin ferrule	0.22 ... 1.5 mm²	24 ... 16 AWG
Rated current / Rated cross section		32 A / 4 mm²	20 A / 12 AWG
Rated short-time withstand current (1s)		480 A	
Rated voltage		800 V	300 V
Impulse withstand voltage		8000 V	
Protection		IP20	NEMA 1

Mounting instructions

Rail		TH 35-7.5, TH 35-15
Wire stripping length		10.5 mm 0.413 in
Tool		Flat screwdriver Ø 3.5 mm Ø 0.138 in
Torque		0.6 Nm ± 0.1 5.31 lb.in ± 0.885

The connecting capacity data for one Rigid: Solid/Stranded, or one Flexible conductor (when applicable) is a mandatory information required by IEC, UL and CSA standards (Copper conductors). All other data are provided as supplementary information only. For more details, please consult our CB, UL or CSA certificates and technical datasheet available on http://www.TE.com

CE CB RoHS USR CSA EAC BV DNV

Accessories

	Description			Color	Type	Part Number		Pkg qty	Weight (1 pce) g
1	**End stops**	10 mm	0.394 in	Dark grey	BAZH1	1SNK900102R0000		20	24.00
2	**End sections**	0.8 mm	0.031 in	Dark grey	ES4-T3	1SNK505961R0000		20	4.20
3	**Jumper bars**	2 poles	32 A (IEC)	Orange	JB5-2	1SNK905302R0000		50	1.30
		3 poles	32 A (IEC)		JB5-3	1SNK905303R0000		50	2.00
		4 poles	32 A (IEC)		JB5-4	1SNK905304R0000		50	2.70
		5 poles	32 A (IEC)		JB5-5	1SNK905305R0000		50	3.50
		10 poles	32 A (IEC)		JB5-10	1SNK905310R0000		30	7.10
		50 poles	32 A (IEC)		JB5-50	1SNK905350R0000		10	36.00
4	**Test adapters**	For test plugs DIA 2 mm 0.079 in		Dark grey	TP2	1SNK900203R0000		20	1.70
		For test plugs DIA 4 mm 0.157 in			TP4	1SNK900205R0000		20	2.40
5	**Label holders**			Dark grey	LH-J	1SNK900606R0000		100	0.73
6	**Terminal block markers**	Blank marker		White	MG-CPM 13 41790	1SNB041790R0512		1960	0.23
		Blank card			MC512	1SNK140000R0000		22	9.00
					MC512PA	1SNK149999R0000		20	10.00
		Universal wire markers holder		Grey	UMH	1SNK900611R0000		10	0.20

Complete list of accessories is indicated in the terminal block datasheet including end stops.
Some accessories such as jumper bars may modify the terminal block's ratings: Complete information available in the accessories section of the catalog.

1SNK161072S0201

Technical data valid for copper conductors only.

ZS4-T3-R1 screw clamp terminal blocks

Triple deck with 3 feed-through circuits - 6 mm 0.236 in spacing

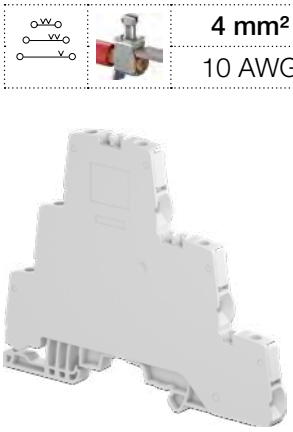

4 mm²	
10 AWG	

ZS4-T3-R1

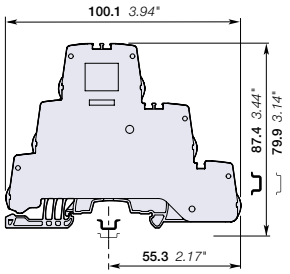

6 mm 0.236 in spacing

Description

Unique triple deck solution combining increased connecting capacity (up to 4 mm² with ferrule) and jumper channel available on each deck,

- Fit many applications: space constraints, multiple signals distribution, sensors distribution,
- Closed terminal block: no end section needed, optimized rigidity.

Ordering details

Description		Color	Type	Part Number		Pkg qty	Weight (1 pce) g
Feed-through	Closed block with 3 feed-through circuits	Grey	ZS4-T3-R1	1SNK506213R0000		50	28.30

Main technical data

Connecting capacity		IEC	UL - CSA
1 conductor per clamp	Rigid: Solid/Stranded	0.2 ... 4 mm²	24 ... 10 AWG
	Flexible without ferrule	0.22 ... 4 mm²	
	Flexible with non insulated ferrule	0.22 ... 4 mm²	24 ... 12 AWG
	Flexible with insulated ferrule	0.22 ... 4 mm²	24 ... 12 AWG
	Gauge	A3-B3	
2 conductors per clamp	Rigid: Solid/Stranded	0.2 ... 1.5 mm²	24 ... 16 AWG
	Flexible without ferrule	0.2 ... 1.5 mm²	
	Flexible with twin ferrule	0.22 ... 1.5 mm²	24 ... 16 AWG
Rated current / Rated cross section		32 A / 4 mm²	30 A / 10 AWG
Rated short-time withstand current (1s)		480 A	
Rated voltage		800 V	300 V
Impulse withstand voltage		8000 V	
Protection		IP20	NEMA 1

Mounting instructions

Rail	TH 35-7.5, TH 35-15
Wire stripping length	10.5 mm 0.413 in
Tool	Flat screwdriver Ø 3.5 mm Ø 0.138 in
Torque	0.6 Nm ± 0.1 5.31 lb.in ± 0.885

The connecting capacity data for one Rigid: Solid/Stranded, or one Flexible conductor (when applicable) is a mandatory information required by IEC, UL and CSA standards (Copper conductors). All other data are provided as supplementary information only. For more details, please consult our CB, UL or CSA certificates and technical datasheet available on http://www.TE.com

CE, CB, RoHS, USR, CSA, EAC, BV, DNV

Accessories

	Description			Color	Type	Part Number		Pkg qty	Weight (1 pce) g
1	**End stops**	10 mm	0.394 in	Dark grey	BAZH1	1SNK900102R0000		20	24.00
2	**Jumper bars**	2 poles	41 A (IEC)	Orange	JB6-2	1SNK906302R0000		50	1.30
		3 poles	41 A (IEC)		JB6-3	1SNK906303R0000		50	2.10
		4 poles	41 A (IEC)		JB6-4	1SNK906304R0000		50	2.90
		5 poles	41 A (IEC)		JB6-5	1SNK906305R0000		50	3.60
		10 poles	41 A (IEC)		JB6-10	1SNK906310R0000		20	7.40
3	**Test adapters**	For test plugs DIA 2 mm 0.079 in		Dark grey	TP2	1SNK900203R0000		20	1.70
		For test plugs DIA 4 mm 0.157 in			TP4	1SNK900205R0000		20	2.40
4	**Label holders**			Dark grey	LH-J	1SNK900606R0000		100	0.73
5	**Terminal block markers**	Blank marker		White	MG-CPM 13 41791	1SNB041791R0612		1680	0.27
		Blank card			MC512	1SNK140000R0000		22	9.00
					MC512PA	1SNK149999R0000		20	10.00
		Universal wire markers holder		Grey	UMH	1SNK900611R0000		10	0.20

Complete list of accessories is indicated in the terminal block datasheet including end stops.
Some accessories such as jumper bars may modify the terminal block's ratings: Complete information available in the accessories section of the catalog.

1SNK161073S0201

Technical data valid for copper conductors only.

ZS4-D-CH-UD screw clamp terminal blocks

Component holder - 5.2 mm 0.205 in spacing

4 mm²
12 AWG

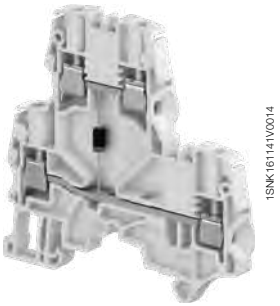

ZS4-D-CH

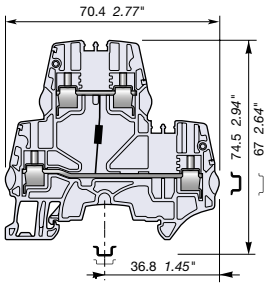

5.2 mm 0.205 in spacing

Description

Protect your circuit with one 1N4007 diode.

Ordering details

Description		Color	Type	Part Number		Pkg qty	Weight (1 pce) g
Component holder	Cathode of the blocking diode connected to the lower circuit	Grey	ZS4-D-CH-UD	1SNK505214R0000		50	15.30

Main technical data

Connecting capacity		IEC	UL - CSA
1 conductor per clamp	Rigid: Solid/Stranded	0.2 ... 4 mm²	24 ... 12 AWG
	Flexible without ferrule	0.22 ... 4 mm²	
	Flexible with non insulated ferrule	0.22 ... 4 mm²	24 ... 12 AWG
	Flexible with insulated ferrule	0.22 ... 2.5 mm²	24 ... 14 AWG
	Gauge	A3-B3	
2 conductors per clamp	Rigid: Solid/Stranded	0.2 ... 1.5 mm²	24 ... 16 AWG
	Flexible without ferrule	0.2 ... 1.5 mm²	
	Flexible with twin ferrule	0.22 ... 1.5 mm²	24 ... 16 AWG
Rated current / Rated cross section		29 A / 4 mm²	20 A / 12 AWG
Rated short-time withstand current (1s)		480 A	
Short Circuit Current Rating (with specific conditions)			
Rated voltage		800 V	300 V
Impulse withstand voltage			
Protection		IP20	NEMA 1

Mounting instructions

Rail	TH 35-7.5, TH 35-15
Wire stripping length	10 mm 0.393 in
Tool	Flat screwdriver Ø 3.5 mm Ø 0.138 in
Torque	0.6 Nm ± 0.1 5.31 lb.in ± 0.885

The connecting capacity data for one Rigid: Solid/Stranded, or one Flexible conductor (when applicable) is a mandatory information required by IEC, UL and CSA standards (Copper conductors). All other data are provided as supplementary information only. For more details, please consult our CB, UL or CSA certificates and technical datasheet available on http://www.TE.com

CE RoHS USR CNR CSA EAC

Accessories

	Description			Color	Type	Part Number		Pkg qty	Weight (1 pce) g
1	**End stops**	10 mm	0.394 in	Dark grey	BAZH1	1SNK900102R0000		20	24.00
2	**End sections**	2.55 mm	0.100 in	Dark grey	ES4-D2	1SNK505960R0000		20	4.10
3	**Jumper bars**	2 poles	32 A (IEC)	Orange	JB5-2	1SNK905302R0000		50	1.30
		3 poles	32 A (IEC)		JB5-3	1SNK905303R0000		50	2.00
		4 poles	32 A (IEC)		JB5-4	1SNK905304R0000		50	2.70
		5 poles	32 A (IEC)		JB5-5	1SNK905305R0000		50	3.50
		10 poles	32 A (IEC)		JB5-10	1SNK905310R0000		30	7.10
4	**Test adapters**	For test plugs DIA 2 mm 0.079 in		Dark grey	TP2	1SNK900203R0000		20	1.70
		For test plugs DIA 4 mm 0.157 in			TP4	1SNK900205R0000		20	2.40
5	**Test connectors**	5.2 mm 0.205 in spacing		Dark grey	TC5	1SNK900200R0000		10	5.20
		End module, 5.2 mm 0.205 in			TC5-R1	1SNK900201R0000		10	5.20
6	**Shield connectors**				SHB	1SNK900602R0000		20	4.90
7	**Label holders**			Dark grey	LH-J	1SNK900606R0000		100	0.73
8	**Terminal block markers**	Blank marker		White	MG-CPM 13 41790	1SNB041790R0512		1960	0.23
		Blank card			MC512	1SNK140000R0000		22	9.00
					MC512PA	1SNK149999R0000		20	10.00
		Universal wire markers holder		Grey	UMH	1SNK900611R0000		10	0.20

Complete list of accessories is indicated in the terminal block datasheet including end stops.
Some accessories such as jumper bars may modify the terminal block's ratings: Complete information available in the accessories section of the catalog.

1SNK161090S0201

Technical data valid for copper conductors only.

ZS4-D-CH-DU screw clamp terminal blocks

Component holder - 5.2 mm 0.205 in spacing

ZS4-D-CH

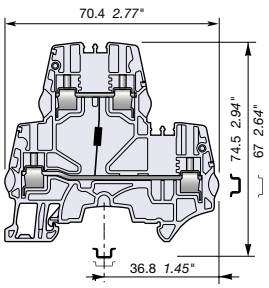

5.2 mm 0.205 in spacing

		4 mm²
		12 AWG

Description

Protect your circuit with one 1N4007 diode.

Ordering details

Description		Color	Type	Part Number		Pkg qty	Weight (1 pce) g
Component holder	Cathode of the blocking diode connected to the upper circuit	Grey	ZS4-D-CH-DU	1SNK505215R0000		50	15.30

Main technical data

Connecting capacity		IEC	UL - CSA
1 conductor per clamp	Rigid: Solid/Stranded	0.2 ... 4 mm²	24 ... 12 AWG
	Flexible without ferrule	0.22 ... 4 mm²	
	Flexible with non insulated ferrule	0.22 ... 4 mm²	24 ... 12 AWG
	Flexible with insulated ferrule	0.22 ... 2.5 mm²	24 ... 14 AWG
	Gauge	A3-B3	
2 conductors per clamp	Rigid: Solid/Stranded	0.2 ... 1.5 mm²	24 ... 16 AWG
	Flexible without ferrule	0.2 ... 1.5 mm²	
	Flexible with twin ferrule	0.22 ... 1.5 mm²	24 ... 16 AWG
Rated current / Rated cross section		29 A / 4 mm²	20 A / 12 AWG
Rated short-time withstand current (1s)		480 A	
Short Circuit Current Rating (with specific conditions)			
Rated voltage		800 V	300 V
Impulse withstand voltage			
Protection		IP20	NEMA 1

Mounting instructions

Rail	TH 35-7.5, TH 35-15
Wire stripping length	10 mm 0.393 in
Tool	Flat screwdriver Ø 3.5 mm Ø 0.138 in
Torque	0.6 Nm ± 0.1 5.31 lb.in ± 0.885

The connecting capacity data for one Rigid: Solid/Stranded, or one Flexible conductor (when applicable) is a mandatory information required by IEC, UL and CSA standards (Copper conductors). All other data are provided as supplementary information only. For more details, please consult our CB, UL or CSA certificates and technical datasheet available on http://www.TE.com

CE RoHS USR CNR CSA EAC

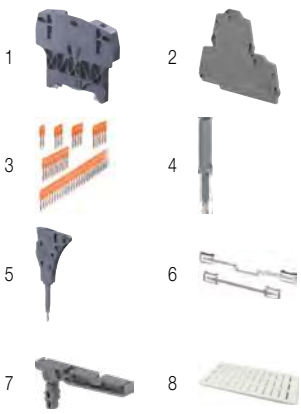

Accessories

	Description			Color	Type	Part Number		Pkg qty	Weight (1 pce) g
1	**End stops**	10 mm	0.394 in	Dark grey	BAZH1	1SNK900102R0000		20	24.00
2	**End sections**	2.55 mm	0.100 in	Dark grey	ES4-D2	1SNK505960R0000		20	4.10
3	**Jumper bars**	2 poles	32 A (IEC)	Orange	JB5-2	1SNK905302R0000		50	1.30
		3 poles	32 A (IEC)		JB5-3	1SNK905303R0000		50	2.00
		4 poles	32 A (IEC)		JB5-4	1SNK905304R0000		50	2.70
		5 poles	32 A (IEC)		JB5-5	1SNK905305R0000		50	3.50
		10 poles	32 A (IEC)		JB5-10	1SNK905310R0000		30	7.10
		50 poles	32 A (IEC)		JB5-50	1SNK905350R0000		10	36.00
4	**Test adapters**	For test plugs DIA 2 mm 0.079 in		Dark grey	TP2	1SNK900203R0000		20	1.70
		For test plugs DIA 4 mm 0.157 in			TP4	1SNK900205R0000		20	2.40
5	**Test connectors**	5.2 mm 0.205 in spacing		Dark grey	TC5	1SNK900200R0000		10	5.20
		End module, 5.2 mm 0.205 in			TC5-R1	1SNK900201R0000		10	5.20
6	**Shield connectors**				SHB	1SNK900602R0000		20	4.90
7	**Label holders**			Dark grey	LH-J	1SNK900606R0000		100	0.73
8	**Terminal block markers**	Blank marker		White	MG-CPM 13 41790	1SNB041790R0512		1960	0.23
		Blank card			MC512	1SNK140000R0000		22	9.00
					MC512PA	1SNK149999R0000		20	10.00
		Universal wire markers holder		Grey	UMH	1SNK900611R0000		10	0.20

Complete list of accessories is indicated in the terminal block datasheet including end stops.
Some accessories such as jumper bars may modify the terminal block's ratings: Complete information available in the accessories section of the catalog.

1SNK161091S0201

Technical data valid for copper conductors only.

Secure your measurement operations

The new ZS10-ST test & measurement terminal blocks benefit from our long experience in the energy applications and from the SNK features: performances, ergonomy, common accessories and marking.

High performances

- 10 mm² 6 AWG
- 6 mm² 10 AWG with ferrule
- 50 A (IEC) 53 A (UL
- Worldwide certifications

Rely on our smart design

Insulated short circuit bridges: SC-JB8

Insulated captive test sockets: AJS9
6 colors
compatible with standard
DIA. 4 mm test plugs
(IEC 60010-031)

Circuit separators: CS
For visual separation between
CT & PT circuits

Protecting cover kits: KCO

New ground terminal block: ZS10-PE-R1

Lateral jumper bar: PC8
For CT or PT commoning

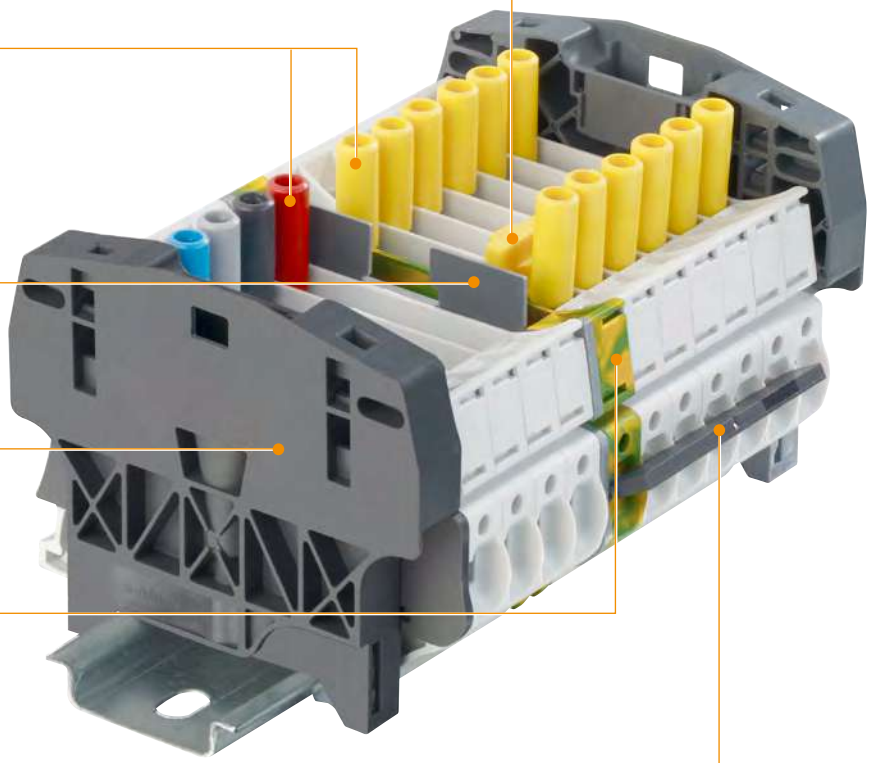

1SNK160057S0201

Assembly with protecting cover

Drilling and centering guide

Guarantee access only to authorized operators

cover can be permanently sealed with a seal or cable tie.

Centering drilling guide for seal or cable tie.

The cover is specially designed to ease its mounting or removal:

– Hook shape on each side for convenient removal with screwdriver

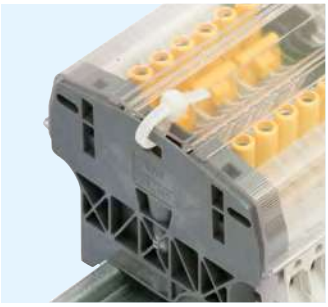

Seal with cable tie

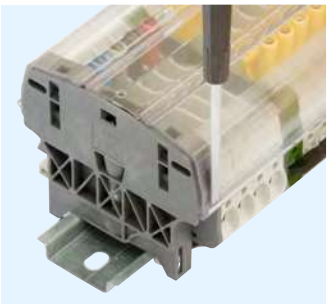

Convenient removal with screwdriver

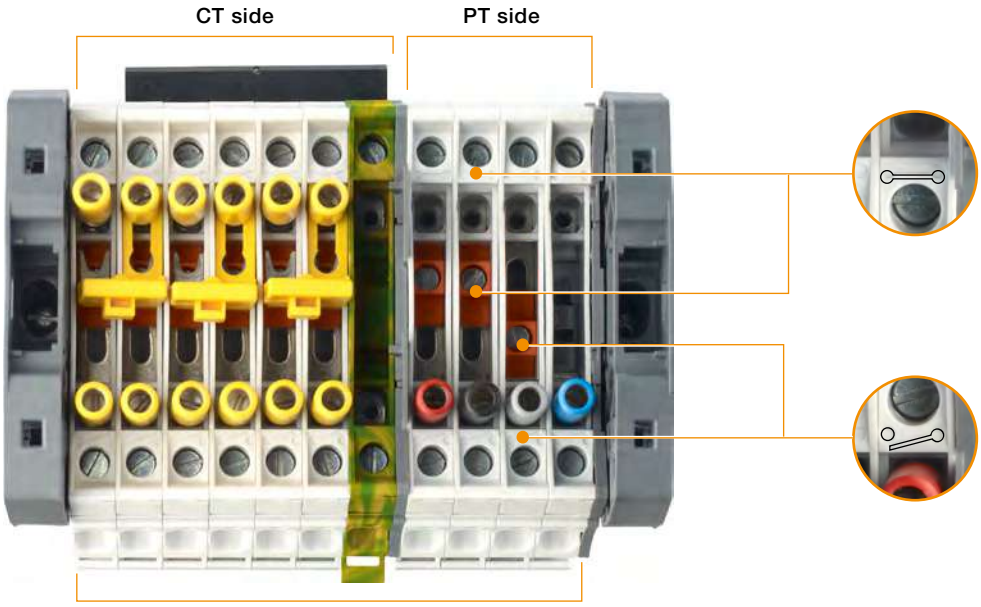

sliding link status: closed

Disconnect sliding link status:
Open and close symbols help to visualize the sliding link position

sliding link status: opened

Short-circuit CT circuits safely and conveniently

1. Fully operated by screwdriver (DIA 3.5 mm)
2. Short-circuited position secured thanks to AJS9 test sockets tightening
3. Adapted hook shape maintain the bridge on terminal block in the non connected position

1SNK160057S0201

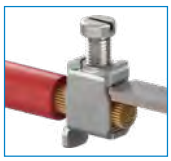

Common point on the transformers

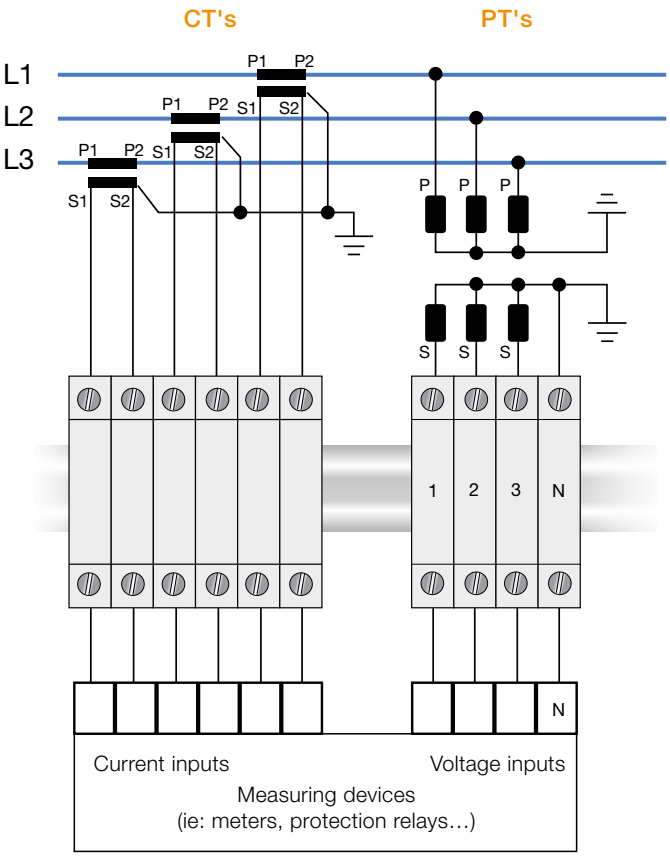

Bill of material optimized

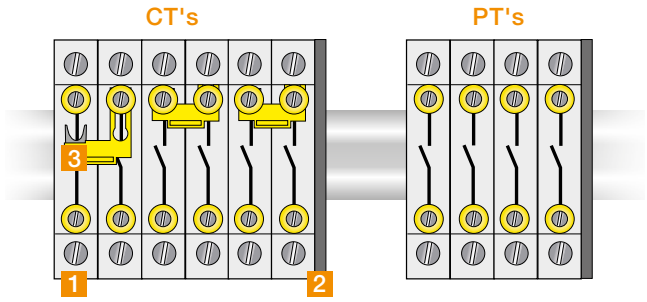

Description	Type	Order code	Qty needed	
			CT's	PT's
1 Terminal block	ZS10-ST-T4	1SNK508311R0000	6	4
2 End section	ES10-ST	1SNK508910R0000	1	1
3 Short-circuit bridges	SC-JB8-2	1SNK900652R0000	3	0

Bill of material with convenient customization (test sockets, feed-through terminals…)

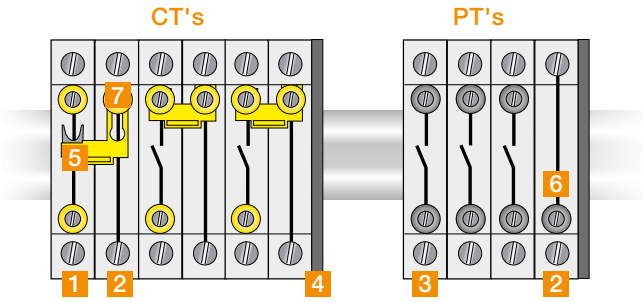

Description	Type	Order code	Qty needed	
			CT's	PT's
1 Terminal block	ZS10-ST-T4	1SNK508311R0000	3	0
2 Terminal block	ZS10-R1	1SNK508011R0000	3	1
3 Terminal block	ZS10-ST-1	1SNK508312R0000	0	3
4 End section	ES10-ST	1SNK508910R0000	1	1
5 Short-circuit bridges	SC-JB8-2	1SNK900652R0000	3	0
6 Test socket	AL4-M3	1SNA206721R0100	0	1
7 Insulated test socket	AJS9	1SNA179726R0200	3	0

1SNK160058S0201

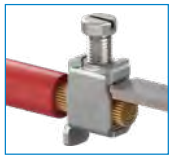

Common point on the terminal block assembly

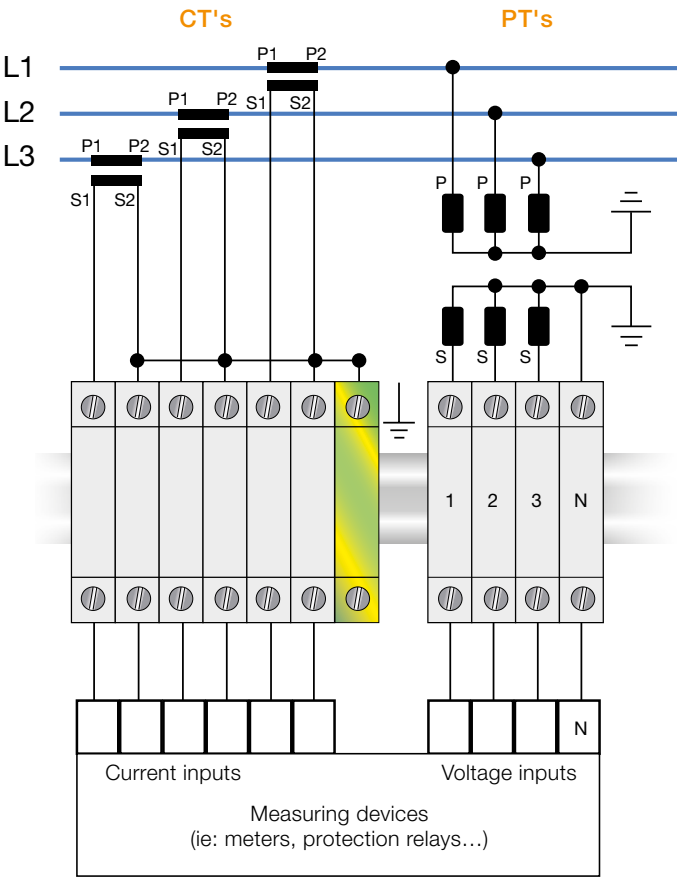

Bill of material optimized

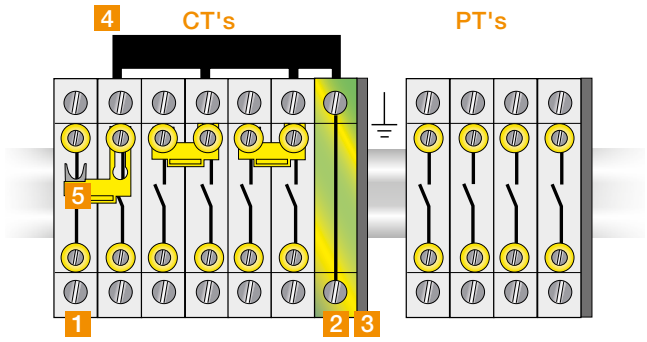

	Description	Type	Order code	Qty needed	
				CT's	PT's
1	Terminal block	ZS10-ST-T4	1SNK508311R0000	6	4
2	Terminal block	ZS10-PE-R1	1SNK508151R0000	1	0
3	End section	ES10-ST	1SNK508910R0000	1	1
4	Lateral jumper bars	PC8-R1	1SNA400711R0600	1	0
5	Short-circuit bridges	SC-JB8-2	1SNK900652R0000	3	0

Bill of material with convenient customization (test sockets, feed-through terminals...)

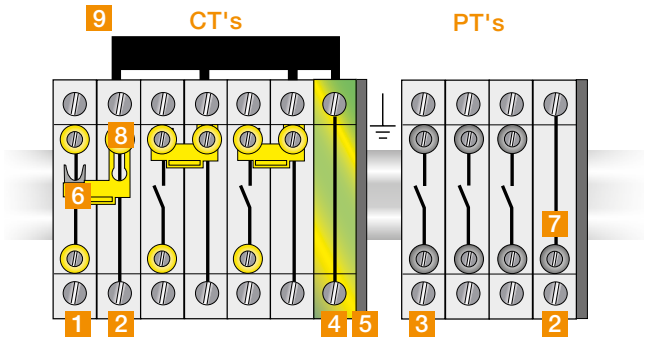

	Description	Type	Order code	Qty needed	
				CT's	PT's
1	Terminal block	ZS10-ST-T4	1SNK508311R0000	3	0
2	Terminal block	ZS10-R1	1SNK508011R0000	3	1
3	Terminal block	ZS10-ST-1	1SNK508312R0000	0	3
4	Terminal block	ZS10-PE-R1	1SNK508151R0000	1	0
5	End section	ES10-ST	1SNK508910R0000	1	1
6	Short-circuit bridges	SC-JB8-2	1SNK900652R0000	3	0
7	Test socket	AL4-M3	1SNA206721R0100	0	1
8	Insulated test socket	AJS9	1SNA179726R0200	3	0
9	Lateral jumper bars	PC8-R1	1SNA400711R0600	1	0

1SNK160058S0201

ZS10-ST screw clamp terminal blocks

Test disconnect with sliding link - 8 mm 0.315 in spacing

10 mm²

6 AWG

1SNK161065F0014

ZS10-ST

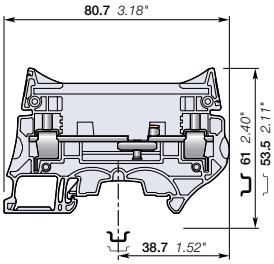

8 mm 0.315 in spacing

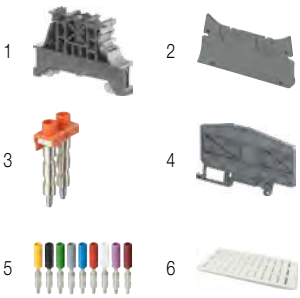

Description

- Secure your disconnect operations in control circuits with the robust sliding link operated with a screwdriver,
- Customize ZS10-ST with colored test sockets in order to identify conveniently each phase of the Current Transformer or Potential Transformers secondary circuits,
- Fully compatible with the ZS10-ST-T4 accessories.

Ordering details

Description	Color	Type	Part Number		Pkg qty	Weight (1 pce) g
Disconnect	Grey	ZS10-ST	1SNK508310R0000		25	24.80

Main technical data

Connecting capacity		IEC	UL - CSA
1 conductor per clamp	Rigid: Solid/Stranded	0.5 ... 10 mm²	24 ... 6 AWG
	Flexible without ferrule	0.5 ... 10 mm²	
	Flexible with non insulated ferrule	0.5 ... 10 mm²	24 ... 8 AWG
	Flexible with insulated ferrule	0.5 ... 6 mm²	24 ... 10 AWG
	Gauge	A5-B5	
2 conductors per clamp	Rigid: Solid/Stranded	0.5 ... 4 mm²	20 ... 12 AWG
	Flexible without ferrule	0.5 ... 4 mm²	
	Flexible with twin ferrule	0.5 ... 4 mm²	20 ... 12 AWG
Rated current / Rated cross section		50 A / 10 mm²	53 A / 6 AWG
Rated short-time withstand current (1s)		1200 A	
Rated voltage		630 V	300 V
Impulse withstand voltage		8000 V	
Protection		IP20	NEMA 1

Mounting instructions

Rail		TH 35-7.5, TH 35-15
Wire stripping length		13 mm 0.512 in
Screw clamp Tool		Flat screwdriver Ø 3.5 mm Ø 0.138 in
Torque		1.3 Nm ± 0.3 11.5 lb.in ± 2.65
Disconnect device Tool		Flat screwdriver Ø 3.5 mm Ø 0.138
Torque		0.4 Nm ... 0.6 Nm 3.5 lb.in ... 5.3 lb.in

The connecting capacity data for one Rigid: Solid/Stranded, or one Flexible conductor (when applicable) is a mandatory information required by IEC, UL and CSA standards (Copper conductors). All other data are provided as supplementary information only. For more details, please consult our CB, UL or CSA certificates and technical datasheet available on http://www.TE.com

CE | CB | RoHS | USR CNR | CSA | EAC | EV | DNV

Accessories

	Description			Color	Type	Part Number		Pkg qty	Weight (1 pce) g
1	**End stops**	10 mm	0.394 in	Dark grey	BAM4	1SNK900001R0000		50	14.00
2	**End sections**	2 mm	0.079 in	Dark grey	ES10-ST	1SNK508910R0000		20	3.5
3	**Jumper bars**	2 poles	50 A (IEC)	Orange	JB8-2-R1	1SNK908902R0000		10	7.6
		3 poles	50 A (IEC)		JB8-3-R1	1SNK908903R0000		10	11.6
		4 poles	50 A (IEC)		JB8-4-R1	1SNK908904R0000		10	15.5
		5 poles	50 A (IEC)		JB8-5-R1	1SNK908905R0000		10	19.4
		10 poles	50 A (IEC)		JB8-10-R1	1SNK908910R0000		10	39.00
4	**Circuit separators**	3 mm	0.118 in	Dark grey	CS-R3	1SNK900107R0000		20	6.40
5	**Test sockets**	Test sockets DIA 4 mm 0.157 in		Yellow	AJS9	1SNA179726R0200		25	3.60
				Black	AJS9-BK	1SNA206680R1500		25	3.60
				Green	AJS9-GN	1SNA206681R0200		25	3.60
				Grey	AJS9-GR	1SNA206682R0300		25	3.60
				Blue	AJS9-BL	1SNA206683R0400		25	3.60
				Red	AJS9-RD	1SNA206720R1400		25	3.60
				White	AJS9-WH	1SNA206765R0000		25	3.60
				Purple	AJS9-PR	1SNA206772R0000		25	3.60
				Brown	AJS9-BR	1SNA206782R0000		25	3.60
		DIA 4 mm 0.157 in - H=12 mm 0.492 in - M3 screw			AL4-M3	1SNA206721R0100		50	1.10
6	**Terminal block markers**	Blank marker		White	MG-CPM 13 41791	1SNB041791R0612		1680	0.27
		Blank card			MC812	1SNK160000R0000		22	10.00
					MC812PA	1SNK169999R0000		20	14.00
		Universal wire markers holder		Grey	UMH	1SNK900611R0000		10	0.20

Complete list of accessories is indicated in the terminal block datasheet including end stops.
Some accessories such as jumper bars may modify the terminal block's ratings: Complete information available in the accessories section of the catalog.

ZS10-R1

ZS10-PE-R1

Screw clamp terminal blocks

Description		Color	Type	Part Number		Pkg qty	Weight (1 pce) g
Feed-through	Profile aligned with ZS10-ST...	Grey	ZS10-R1	1SNK508011R0000		25	20.90
Ground	Profile aligned with ZS10-ST...	Green-yellow	ZS10-PE-R1	1SNK508151R0000		25	28.40

1SNK161056S0201

Technical data valid for copper conductors only.

ZS10-ST-1 screw clamp terminal blocks

Test disconnect with sliding link for Potential Transformer circuits - 8 mm 0.315 in spacing

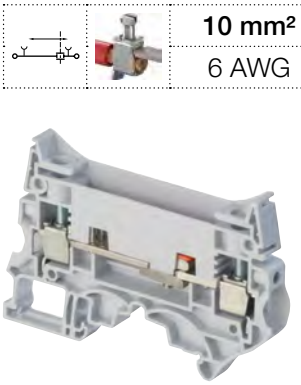

10 mm²
6 AWG

1SNK161069F0014

ZS10-ST-1

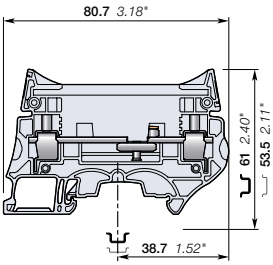

8 mm 0.315 in spacing

Description

Test terminal blocks especially designed for Potential Transformers circuits:

- low profile voltage measurement thanks to the two compact built-in test sockets compatible with DIA 4 mm 0.157 in test plugs,
- Installed with our aligned feed-through and ground terminal blocks, you benefit of a complete and compact solution for your PT circuits.

Ordering details

Description		Color	Type	Part Number		Pkg qty	Weight (1 pce) g
Disconnect	With 2 test sockets DIA 4 mm 0.157 in	Grey	ZS10-ST-1	1SNK508312R0000		25	27.00

Main technical data

Connecting capacity		IEC	UL - CSA
1 conductor per clamp	Rigid: Solid/Stranded	0.5 ... 10 mm²	24 ... 6 AWG
	Flexible without ferrule	0.5 ... 10 mm²	
	Flexible with non insulated ferrule	0.5 ... 10 mm²	24 ... 8 AWG
	Flexible with insulated ferrule	0.5 ... 6 mm²	24 ... 10 AWG
	Gauge	A5-B5	
2 conductors per clamp	Rigid: Solid/Stranded	0.5 ... 4 mm²	20 ... 12 AWG
	Flexible without ferrule	0.5 ... 4 mm²	
	Flexible with twin ferrule	0.5 ... 4 mm²	20 ... 12 AWG
Rated current / Rated cross section		50 A / 10 mm²	53 A / 6 AWG
Rated short-time withstand current (1s)		1200 A	
Rated voltage		630 V	300 V
Impulse withstand voltage		8000 V	
Protection		IP10	NEMA 1

Mounting instructions

Rail		TH 35-7.5, TH 35-15
Wire stripping length		13 mm 0.512 in
Screw clamp Tool		Flat screwdriver Ø 3.5 mm Ø 0.138 in
Torque		1.3 Nm ± 0.3 11.5 lb.in ± 2.65
Disconnect device Tool		Flat screwdriver Ø 3.5 mm Ø 0.138
Torque		0.4 Nm ... 0.6 Nm 3.5 lb.in ... 5.3 lb.in

The connecting capacity data for one Rigid: Solid/Stranded, or one Flexible conductor (when applicable) is a mandatory information required by IEC, UL and CSA standards (Copper conductors). All other data are provided as supplementary information only. For more details, please consult our CB, UL or CSA certificates and technical datasheet available on http://www.TE.com

CE | CB | RoHS | USR CNR | CSA | EAC | BV | DNV

Accessories

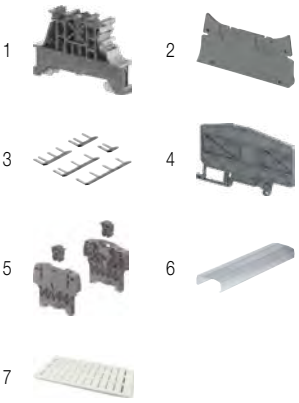

	Description			Color	Type	Part Number		Pkg qty	Weight (1 pce) g
1	**End stops**	10 mm	0.394 in	Dark grey	BAM4	1SNK900001R0000		50	14.00
2	**End sections**	2 mm	0.079 in	Dark grey	ES10-ST	1SNK508910R0000		20	3.5
3	**Lateral jumper bars**	10 poles		Black	PC8-10	1SNA163313R2400		10	14.00
		4/6 poles			PC8-R1	1SNA400711R0600		10	6.60
		4/8 poles			PC8-R2	1SNA400712R0700		10	7.80
		4/10 poles			PC8-R3	1SNA400713R0000		10	9.00
		3/4 poles			PC8-R4	1SNA400724R0300		10	4.50
		4/7 poles			PC8-R5	1SNA400842R0000		10	6.60
		2/3 poles			PC8-R6	1SNA400843R0000		10	6.60
		4/6 poles			PC8-R7	1SNA400849R0000		10	6.60
		4/8 poles			PC8-R8	1SNA400850R0000		10	7.80
4	**Circuit separators**	3 mm	0.118 in	Dark grey	CS-R3	1SNK900107R0000		20	6.40
5	**Protecting cover kits**			Dark grey	KCO	1SNK900624R0000		1	47.80
6	**Protecting covers**	1 m 39.4 in length		Transparent	CO	1SNK900604R0000		1	300.00
7	**Terminal block markers**	Blank marker		White	MG-CPM 13 41791	1SNB041791R0612		1680	0.27
		Blank card			MC812	1SNK160000R0000		22	10.00
					MC812PA	1SNK169999R0000		20	14.00
		Universal wire markers holder		Grey	UMH	1SNK900611R0000		10	0.20

Complete list of accessories is indicated in the terminal block datasheet including end stops.
Some accessories such as jumper bars may modify the terminal block's ratings: Complete information available in the accessories section of the catalog.

ZS10-R1 ZS10-PE-R1

Screw clamp terminal blocks

Description		Color	Type	Part Number		Pkg qty	Weight (1 pce) g
Feed-through	Profile aligned with ZS10-ST...	Grey	ZS10-R1	1SNK508011R0000		25	20.90
Ground	Profile aligned with ZS10-ST...	Green-yellow	ZS10-PE-R1	1SNK508151R0000		25	28.40

1SNK161062S0201

Technical data valid for copper conductors only.

ZS10-ST-T4 screw clamp terminal blocks

Test disconnect with sliding link for Current Transformer circuits - 8 mm 0.315 in spacing

10 mm²
6 AWG

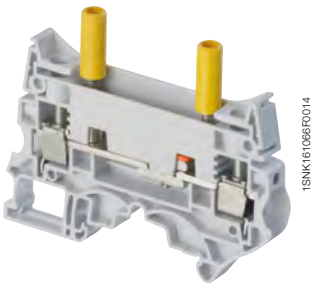

ZS10-ST-T4

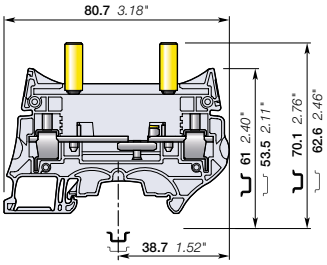

8 mm 0.315 in spacing

Description

Test terminal blocks especially designed for Current Transformers circuits:

- easy and safe current measurement thanks to the two insulated built-in test sockets compatible with IP20 DIA 4 mm 0.157 in test plugs (per IEC60101-031),
- convenient short-circuit operations with the SC-JB insulated sliding bridges.

Ordering details

Description		Color	Type	Part Number		Pkg qty	Weight (1 pce) g
Disconnect	With two yellow test sockets DIA 4 mm 0.157 in	Grey	ZS10-ST-T4	1SNK508311R0000		25	31.90

Main technical data

Connecting capacity		IEC	UL - CSA
1 conductor per clamp	Rigid: Solid/Stranded	0.5 ... 10 mm²	24 ... 6 AWG
	Flexible without ferrule	0.5 ... 10 mm²	
	Flexible with non insulated ferrule	0.5 ... 10 mm²	24 ... 8 AWG
	Flexible with insulated ferrule	0.5 ... 6 mm²	24 ... 10 AWG
	Gauge	A5-B5	
2 conductors per clamp	Rigid: Solid/Stranded	0.5 ... 4 mm²	20 ... 12 AWG
	Flexible without ferrule	0.5 ... 4 mm²	
	Flexible with twin ferrule	0.5 ... 4 mm²	20 ... 12 AWG
Rated current / Rated cross section		50 A / 10 mm²	53 A / 6 AWG
Rated short-time withstand current (1s)		1200 A	
Rated voltage		630 V	300 V
Impulse withstand voltage		8000 V	
Protection		IP20	NEMA 1

Mounting instructions

Rail	TH 35-7.5, TH 35-15
Wire stripping length	13 mm 0.512 in
Screw clamp Tool	Flat screwdriver Ø 3.5 mm Ø 0.138 in
Torque	1.3 Nm ± 0.3 11.5 lb.in ± 2.65
Disconnect device Tool	Flat screwdriver Ø 3.5 mm Ø 0.138
Torque	0.4 Nm ... 0.6 Nm 3.5 lb.in ... 5.3 lb.in
Test socket Tool	Flat screwdriver Ø 3.5 mm Ø 0.138
Torque	0.4 Nm ... 0.6 Nm 3.5 lb.in ... 5.3 lb.in

The connecting capacity data for one Rigid: Solid/Stranded, or one Flexible conductor (when applicable) is a mandatory information required by IEC, UL and CSA standards (Copper conductors). All other data are provided as supplementary information only. For more details, please consult our CB, UL or CSA certificates and technical datasheet available on http://www.TE.com

CE | CB | RoHS | USR CNR | CSA | EAC | BV | DNV

Accessories

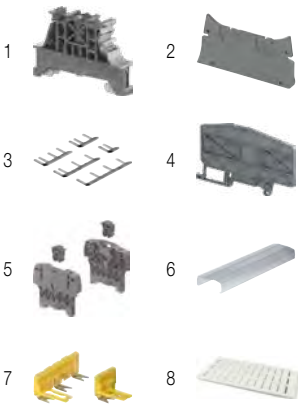

	Description			Color	Type	Part Number		Pkg qty	Weight (1 pce) g
1	**End stops**	10 mm	0.394 in	Dark grey	BAM4	1SNK900001R0000		50	14.00
2	**End sections**	2 mm	0.079 in	Dark grey	ES10-ST	1SNK508910R0000		20	3.5
3	**Lateral jumper bars**	10 poles		Black	PC8-10	1SNA163313R2400		10	14.00
		4/6 poles			PC8-R1	1SNA400711R0600		10	6.60
		4/8 poles			PC8-R2	1SNA400712R0700		10	7.80
		4/10 poles			PC8-R3	1SNA400713R0000		10	9.00
		3/4 poles			PC8-R4	1SNA400724R0300		10	4.50
		4/7 poles			PC8-R5	1SNA400842R0000		10	6.60
		2/3 poles			PC8-R6	1SNA400843R0000		10	6.60
		4/6 poles			PC8-R7	1SNA400849R0000		10	6.60
		4/8 poles			PC8-R8	1SNA400850R0000		10	7.80
4	**Circuit separators**	3 mm	0.118 in	Dark grey	CS-R3	1SNK900107R0000		20	6.40
5	**Protecting cover kits**			Dark grey	KCO	1SNK900624R0000		1	47.80
6	**Protecting covers**	1 m 39.4 in length		Transparent	CO	1SNK900604R0000		1	300.00
7	**Short circuit bridges**	2 poles		Yellow	SC-JB8-2	1SNK900652R0000		25	2.00
		3 poles			SC-JB8-3	1SNK900653R0000		25	3.4
		4 poles			SC-JB8-4	1SNK900654R0000		25	4.7
8	**Terminal block markers**	Blank marker		White	MG-CPM 13 41791	1SNB041791R0612		1680	0.27
		Blank card			MC812	1SNK160000R0000		22	10.00
					MC812PA	1SNK169999R0000		20	14.00
		Universal wire markers holder		Grey	UMH	1SNK900611R0000		10	0.20

Complete list of accessories is indicated in the terminal block datasheet including end stops.
Some accessories such as jumper bars may modify the terminal block's ratings: Complete information available in the accessories section of the catalog.

Screw clamp terminal blocks

ZS10-R1 ZS10-PE-R1

Description		Color	Type	Part Number		Pkg qty	Weight (1 pce) g
Feed-through	Profile aligned with ZS10-ST...	Grey	ZS10-R1	1SNK508011R0000		25	20.90
Ground	Profile aligned with ZS10-ST...	Green-yellow	ZS10-PE-R1	1SNK508151R0000		25	28.40

1SNK161057S0201

Technical data valid for copper conductors only.

ZS10-R1 screw clamp terminal blocks
Feed-through - 8 mm 0.315 in spacing

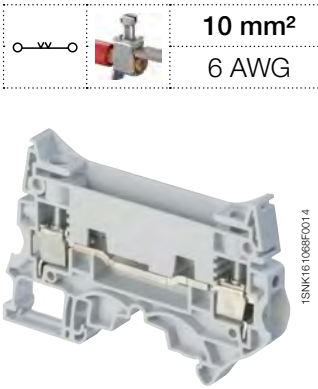

ZS10-R1

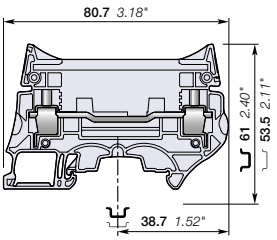

8 mm 0.315 in spacing

	10 mm²
	6 AWG

Description

- With the same profile as the ZS10-ST..., the feed-through ZS10-R1 allows you to fully implement the electrical drawing of your CT or PT circuits,
- Fully compatible with the ZS10-ST... accessories.

Ordering details

Description		Color	Type	Part Number		Pkg qty	Weight (1 pce) g
Feed-through	Profile aligned with ZS10-ST...	Grey	ZS10-R1	1SNK508011R0000		25	20.90

Main technical data

Connecting capacity		IEC	UL - CSA
1 conductor per clamp	Rigid: Solid/Stranded	0.5 ... 10 mm²	24 ... 6 AWG
	Flexible without ferrule	0.5 ... 10 mm²	
	Flexible with non insulated ferrule	0.5 ... 10 mm²	24 ... 8 AWG
	Flexible with insulated ferrule	0.5 ... 6 mm²	24 ... 10 AWG
	Gauge	A5-B5	
2 conductors per clamp	Rigid: Solid/Stranded	0.5 ... 4 mm²	20 ... 12 AWG
	Flexible without ferrule	0.5 ... 4 mm²	
	Flexible with twin ferrule	0.5 ... 4 mm²	20 ... 12 AWG
Rated current / Rated cross section		57 A / 10 mm²	62 A / 6 AWG
Rated short-time withstand current (1s)		1200 A	
Short Circuit Current Rating (with specific conditions)			
Rated voltage		630 V	300 V
Impulse withstand voltage		8000 V	
Protection		IP20	NEMA 1

Mounting instructions

Rail	TH 35-7.5, TH 35-15
Wire stripping length	13 mm 0.512 in
Tool	Flat screwdriver Ø 3.5 mm Ø 0.138 in
Torque	1.3 Nm ± 0.3 11.5 lb.in ± 2.65

The connecting capacity data for one Rigid: Solid/Stranded, or one Flexible conductor (when applicable) is a mandatory information required by IEC, UL and CSA standards (Copper conductors). All other data are provided as supplementary information only. For more details, please consult our CB, UL or CSA certificates and technical datasheet available on http://www.TE.com

CE CB RoHS USR CNR CSA EAC BV DNV

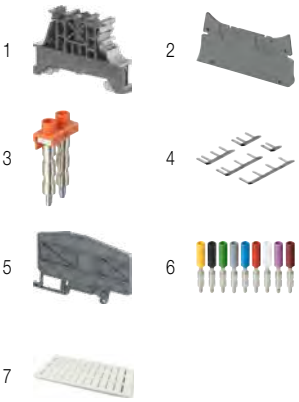

Accessories

	Description			Color	Type	Part Number		Pkg qty	Weight (1 pce) g
1	**End stops**	10 mm	0.394 in	Dark grey	BAM4	1SNK900001R0000		50	14.00
2	**End sections**	2 mm	0.079 in	Dark grey	ES10-ST	1SNK508910R0000		20	3.5
3	**Jumper bars**	2 poles	50 A (IEC)	Orange	JB8-2-R1	1SNK908902R0000		10	7.6
		3 poles	50 A (IEC)		JB8-3-R1	1SNK908903R0000		10	11.6
		4 poles	50 A (IEC)		JB8-4-R1	1SNK908904R0000		10	15.5
		5 poles	50 A (IEC)		JB8-5-R1	1SNK908905R0000		10	19.4
		10 poles	50 A (IEC)		JB8-10-R1	1SNK908910R0000		10	39.00
4	**Lateral jumper bars**	4/7 poles		Black	PC8-R5	1SNA400842R0000		10	6.60
		2/3 poles			PC8-R6	1SNA400843R0000		10	6.60
		4/6 poles			PC8-R7	1SNA400849R0000		10	6.60
		4/8 poles			PC8-R8	1SNA400850R0000		10	7.80
5	**Circuit separators**	3 mm	0.118 in	Dark grey	CS-R3	1SNK900107R0000		20	6.40
6	**Test sockets**	Test sockets DIA 4 mm 0.157 in		Yellow	AJS9	1SNA179726R0200		25	3.60
7	**Terminal block markers**	Blank marker		White	MG-CPM 13 41791	1SNB041791R0612		1680	0.27
		Blank card			MC812	1SNK160000R0000		22	10.00
					MC812PA	1SNK169999R0000		20	14.00
		Universal wire markers holder		Grey	UMH	1SNK900611R0000		10	0.20

Complete list of accessories is indicated in the terminal block datasheet including end stops.
Some accessories such as jumper bars may modify the terminal block's ratings: Complete information available in the accessories section of the catalog.

1SNK161059S0201

Technical data valid for copper conductors only.

ZS10-PE-R1 screw clamp terminal blocks

Ground - 8 mm 0.315 in spacing

10 mm²

6 AWG

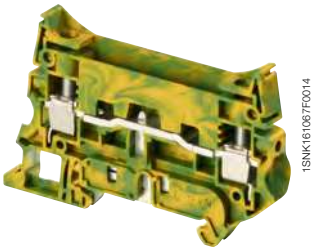

1SNK161067F0014

ZS10-PE-R1

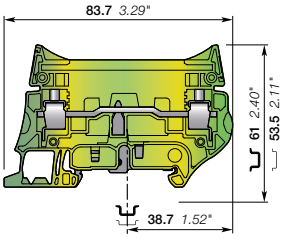

8 mm 0.315 in spacing

Description

- With the same profile as the ZS10-ST..., the ground ZS10-PE-R1 allows you to fully implement the electrical drawing of your CT or PT circuits,
- Fully compatible with the ZS10-ST... accessories,
- Short-circuit performances above the requirements of IEC 60947-7-2 terminal block standard,
- Secured snap on or remove from the rail.

Ordering details

Description		Color	Type	Part Number		Pkg qty	Weight (1 pce) g
Ground	Profile aligned with ZS10-ST...	Green-yellow	ZS10-PE-R1	1SNK508151R0000		25	28.40

Main technical data

Connecting capacity		IEC	UL - CSA
1 conductor per clamp	Rigid: Solid/Stranded	0.5 ... 10 mm²	24 ... 6 AWG
	Flexible without ferrule	0.5 ... 10 mm²	
	Flexible with non insulated ferrule	0.5 ... 10 mm²	24 ... 8 AWG
	Flexible with insulated ferrule	0.5 ... 6 mm²	24 ... 10 AWG
	Gauge	A5-B5	
Rated cross section		10 mm²	6 AWG
Rated short-time withstand current (1s)		1200 A	1596 A
Protection		IP20	NEMA 1

Mounting instructions

Rail		TH 35-7.5, TH 35-15
Wire stripping length		13 mm 0.512 in
Tool		Flat screwdriver Ø 3.5 mm Ø 0.138 in
Torque		1.3 Nm ± 0.3 11.5 lb.in ± 2.65

The connecting capacity data for one Rigid: Solid/Stranded, or one Flexible conductor (when applicable) is a mandatory information required by IEC, UL and CSA standards (Copper conductors). All other data are provided as supplementary information only. For more details, please consult our CB, UL or CSA certificates and technical datasheet available on http://www.TE.com

CE | CB | RoHS | USR CNR | CSA | EAC | BV | DNV

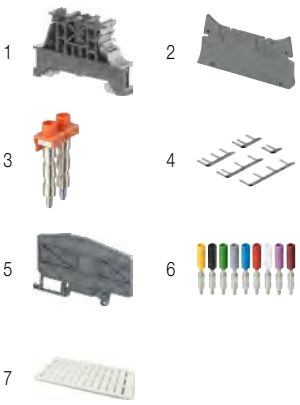

Accessories

	Description			Color	Type	Part Number		Pkg qty	Weight (1 pce) g
1	**End stops**	10 mm	0.394 in	Dark grey	BAM4	1SNK900001R0000		50	14.00
2	**End sections**	2 mm	0.079 in	Dark grey	ES10-ST	1SNK508910R0000		20	3.5
3	**Jumper bars**	2 poles	50 A (IEC)	Orange	JB8-2-R1	1SNK908902R0000		10	7.6
		3 poles	50 A (IEC)		JB8-3-R1	1SNK908903R0000		10	11.6
		4 poles	50 A (IEC)		JB8-4-R1	1SNK908904R0000		10	15.5
		5 poles	50 A (IEC)		JB8-5-R1	1SNK908905R0000		10	19.4
		10 poles	50 A (IEC)		JB8-10-R1	1SNK908910R0000		10	39.00
4	**Lateral jumper bars**	4/7 poles		Black	PC8-R5	1SNA400842R0000		10	6.60
		2/3 poles			PC8-R6	1SNA400843R0000		10	6.60
		4/6 poles			PC8-R7	1SNA400849R0000		10	6.60
		4/8 poles			PC8-R8	1SNA400850R0000		10	7.80
5	**Circuit separators**	3 mm	0.118 in	Dark grey	CS-R3	1SNK900107R0000		20	6.40
6	**Test sockets**	Test sockets DIA 4 mm 0.157 in		Yellow	AJS9	1SNA179726R0200		25	3.60
7	**Terminal block markers**	Blank marker		White	MG-CPM 13 41791	1SNB041791R0612		1680	0.27
		Blank card			MC812	1SNK160000R0000		22	10.00
					MC812PA	1SNK169999R0000		20	14.00
		Universal wire markers holder		Grey	UMH	1SNK900611R0000		10	0.20

Complete list of accessories is indicated in the terminal block datasheet including end stops.
Some accessories such as jumper bars may modify the terminal block's ratings: Complete information available in the accessories section of the catalog.

1SNK161058S0201

Technical data valid for copper conductors only.

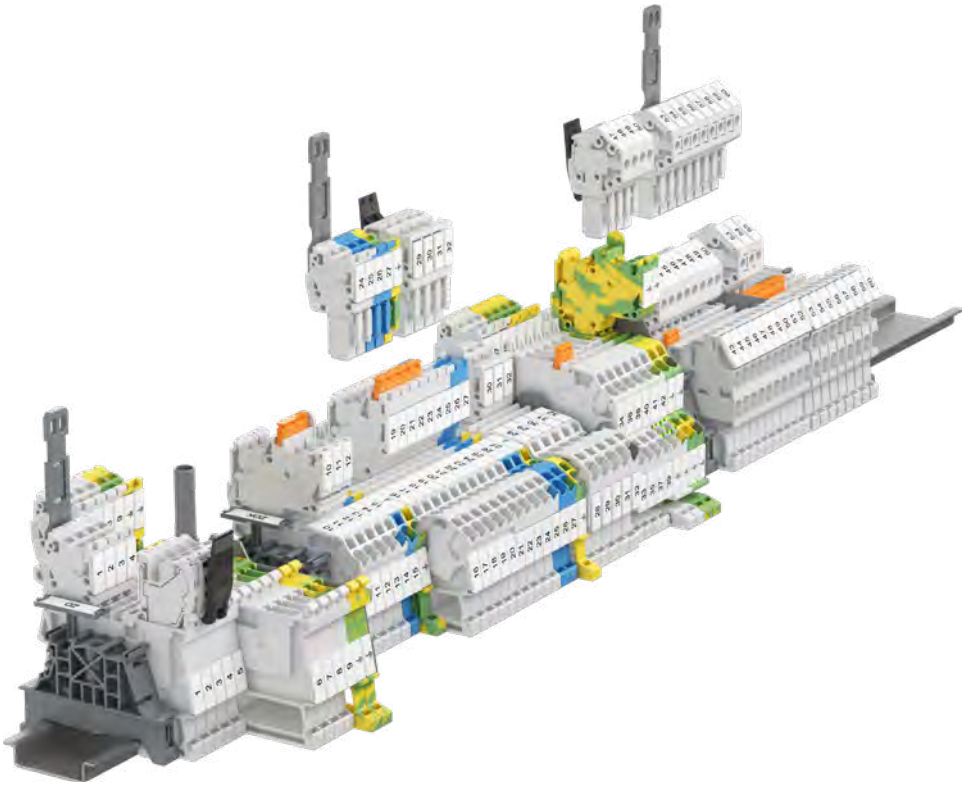

SNK series, terminal blocks
Pluggable technology

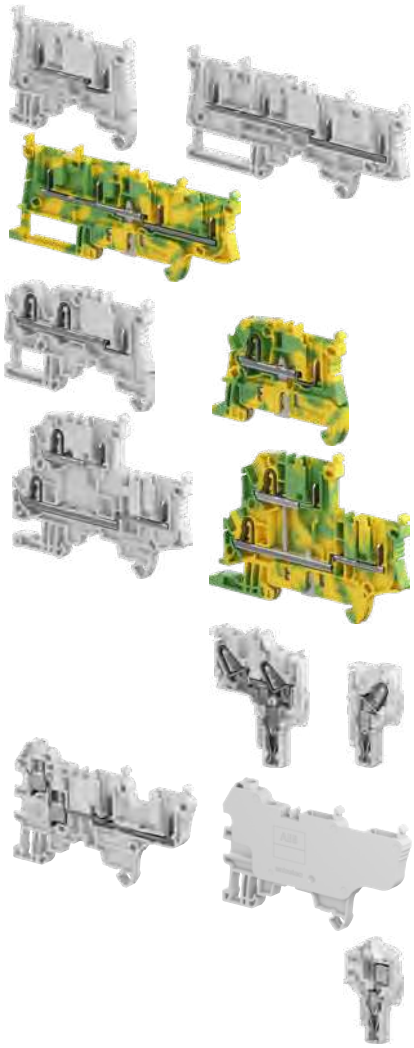

Technologies presentation			162
Overview			168

PI-Spring Pluggable

Pluggable Pluggable

2.5 mm² / 12 AWG	Feed-through	**ZD2.5-11**	172
		ZD2.5-22	173
	Ground	**ZD2.5-22-PE**	174

PI-Spring Pluggable

2.5 mm² / 12 AWG	Feed-through	**ZDK2.5-11**	175
		ZDK2.5-21	176
		ZDK2.5-22	177
4 mm² / 10 AWG	Feed-through	**ZDK4-22**	178
2.5 mm² / 12 AWG	Ground	**ZDK2.5-11-PE**	179
		ZDK2.5-22-PE	180
	Double deck	**ZDK2.5-D2**	181
		ZDK2.5-D1	182
		ZDK2.5-D2-PE	183
		ZDK2.5-D1-PE	184
PI-Spring female plugs		**CDK2.5**	185
		CDK2.5-J	186
		CDK2.5-2P-J	187
		CDK4	188

Screw clamp Pluggable

4 mm² / 10 AWG	Feed-through	**ZDS4-22**	190
		ZDS4-22-R1	192
Screw clamp female plugs		**CDS4**	191
		CDS4-R1	193

The SNK series pluggable terminal blocks combine the benefits of our smart connections with the flexibility of the pluggable function.

PI-Spring Pluggable

PI-Spring Pluggable

Pluggable Pluggable

Screw clamp Pluggable

Speed up your projects

Modularity brings assembly flexibility

Pluggable technology brings modularity into the electrical installation allowing the combination of sub-assemblies and prewired harnesses that facilitate and considerably accelerate assembly test and factory commissioning.

Better project identification

– Circuit identification is improved thanks to the 20% larger marking area
– Pre-mark by hand or with label on our flat marking surface and start immediately the wiring, before the final markers mounting
– Spare markers re-printing in case of modifications.

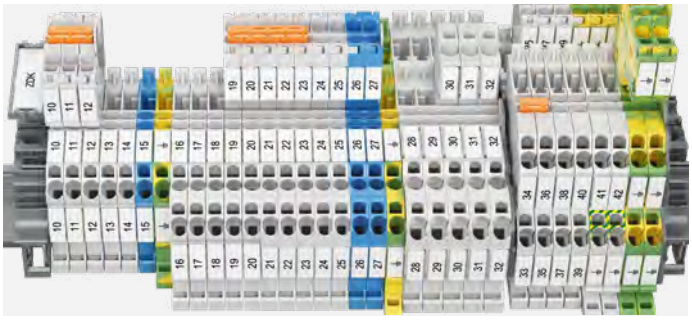

Clear circuit identification

1SNK164014S0201 - Rev. A

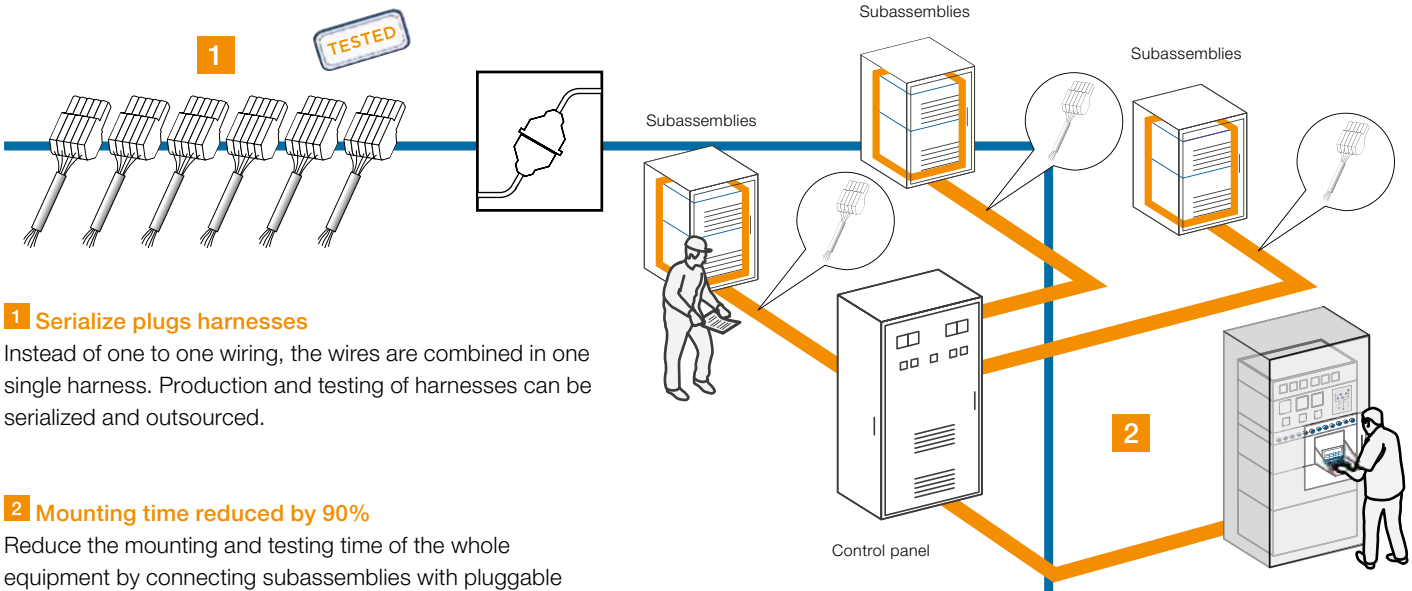

1 Serialize plugs harnesses

Instead of one to one wiring, the wires are combined in one single harness. Production and testing of harnesses can be serialized and outsourced.

2 Mounting time reduced by 90%

Reduce the mounting and testing time of the whole equipment by connecting subassemblies with pluggable terminal blocks and harnesses. Ease the factory commissioning.

3 Disconnect for transportation

Easily disconnect the harnesses if needed for convenient transportation of big equipment.

4 Quickly secure on-site reconnection

Secure oan-site installation: final reconnection is done in few quick steps and fully secured thanks to error-free coding system. Facilitate the final commissioning.

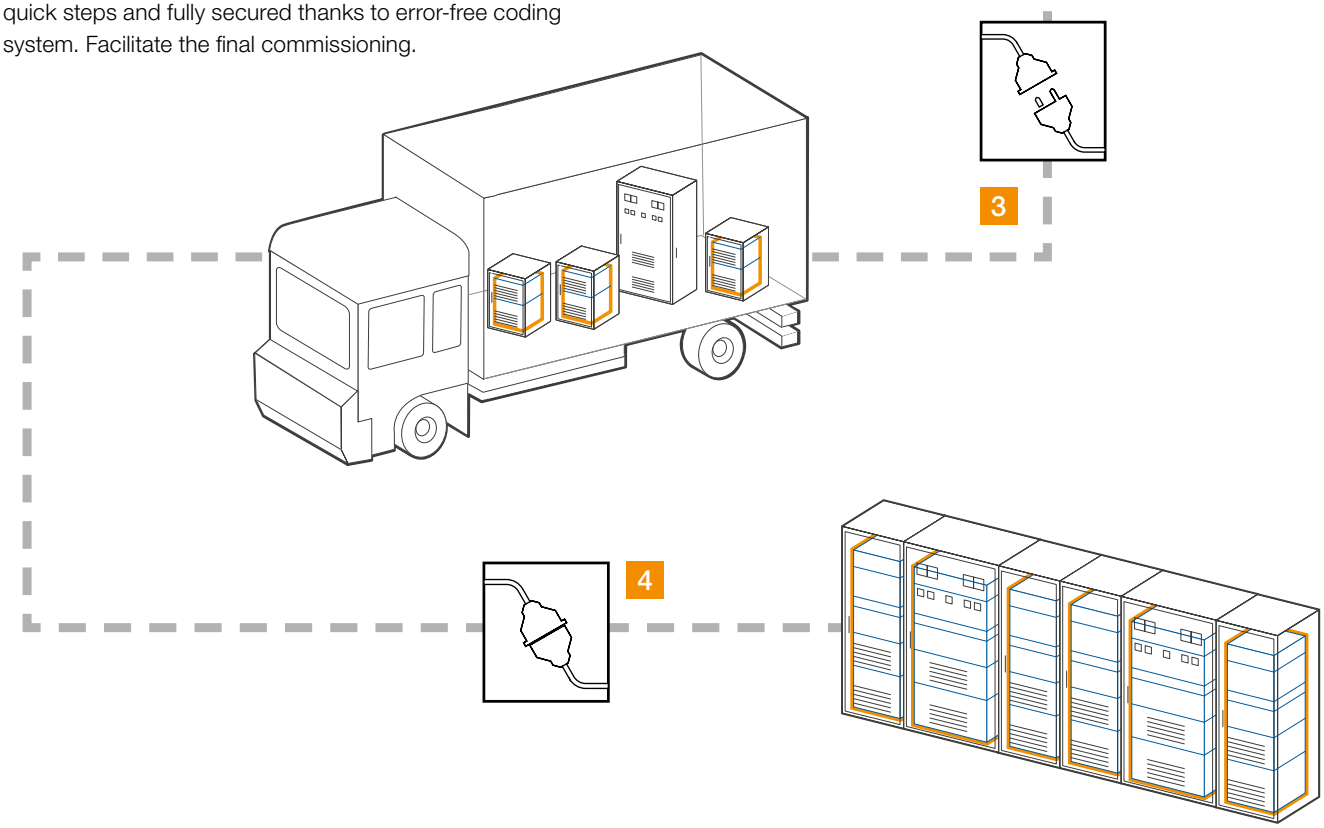

1SNK164014S0201 - Rev. A

Easy to install

Smart design facilitating assembly process

Mounting, wiring, testing… made easy.

Create your own assemblies without tooling:

– Easily snap together multiple plugs

– Eliminate stock of pre-configured plugs.

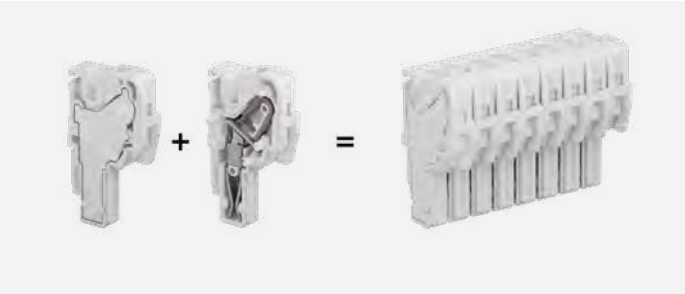

Only two plug variants are required to compose harnesses up to 15 poles

Some plugs feature a jumper channel and/or 2 connections that ease the signal distribution or wiring daisy chaining of subassemblies.

Easy signal distribution on plugs

Safety and protection

Eliminate connection errors with coding pegs:

– Simply insert the pegs to create a coding sequence.

Secure your wiring against accidental tearing:

– Automatic locking function

– Lock safely 2 to 8 plugs with only one locking device

– Cable clamp secures the wires onto the plug when pulling the plug assembly.

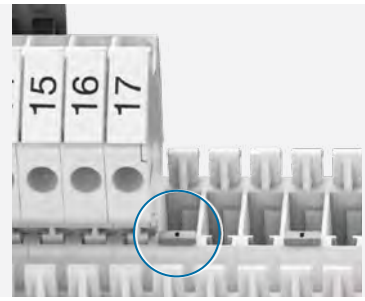

Convenient coding pegs

Cable clamp & locking device

1SNK164014S0201 - Rev. A

Faster accessories mounting

Save up to 70% mounting time thanks to:

– Screwless jumpers, component plugs, test devices, end stops and snap-in ground terminal blocks.

Closed jumper location allows great stiffness of the terminal block, avoid deflection while tightening and optimal jumper guiding.

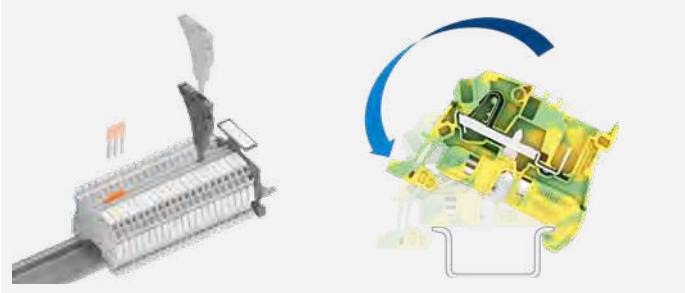

Screwless accessories **Snap-in ground terminal blocks**

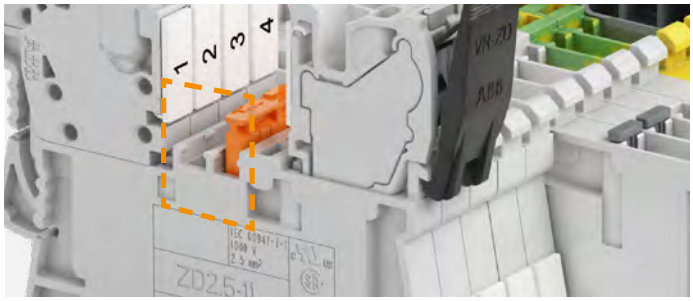

Closed jumper location for stiffness

Smart accessories

Flexible test solutions from individual insulated test adapter to test connectors for complete assemblies testing.

– Direct plug-in into jumpers channels

– 5, 6, 8 mm spacing, mixing various spacing is possible

– 1000 V rating.

Smart plug-in jumpers

Pre-cut poles removable by hand: clean cut.

Insulated up to 1000 V (avoid use of separators).

Predefined shapes in molding to easily identify connected poles with a pen.

Plug-in individual test adapter **Plug-in test connector**

Pre-cut poles easy removable by hand **Predefined shape to identify connected poles**

1SNK164014S0201 - Rev. A

Optimized logistics

Reduce your accessories inventory by up to 50%

SNK PI-Spring, screw and pluggable ranges share the same accessories.

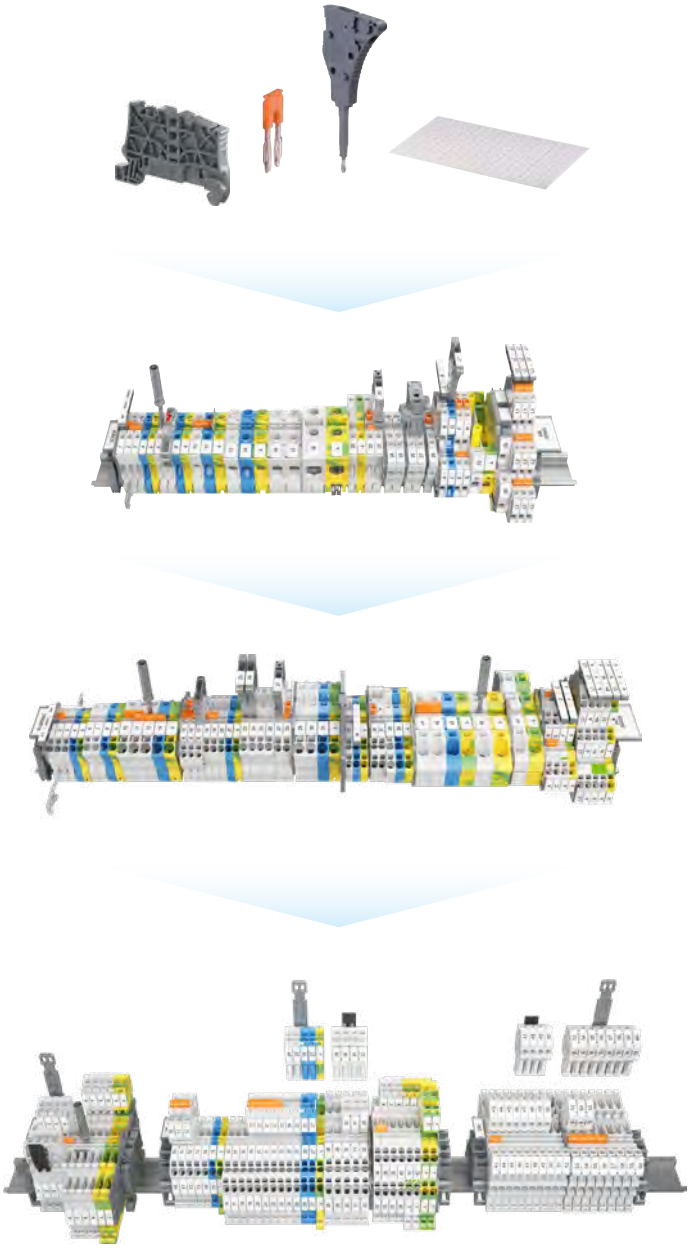

Shared accessories for SNK PI-Spring, screw and pluggable ranges

Facilitate maintenance operations

Terminal blocks can be individually removed from a terminal assembly equipped with markers: TE Connectivity markers become independent after strip mounting. The markers remain on terminal in any situation.
Markers are interchangable: the smaller marker can fit any bigger block.

Maintenance operations facilitated

Reliable in harsh conditions

Qualified for worldwide markets, applications and for severe environments: vibration, shock, corrosion…

1SNK164014S0201 - Rev. A

1SNK164014S0201 - Rev. A

SNK series, terminal blocks

Pluggable technology - Range overview from 2.5 to 4 mm² – 12 to 10 AWG

PI-Spring Pluggable

Pluggable Pluggable

2 Connections
Single deck
Feed-through

4 Connections
Single deck
Feed-through
Ground

PI-Spring Pluggable

2 Connections
Single deck
Feed-through
Ground

3 Connections
Single deck
Feed-through

4 Connections
Single deck
Feed-through
Ground

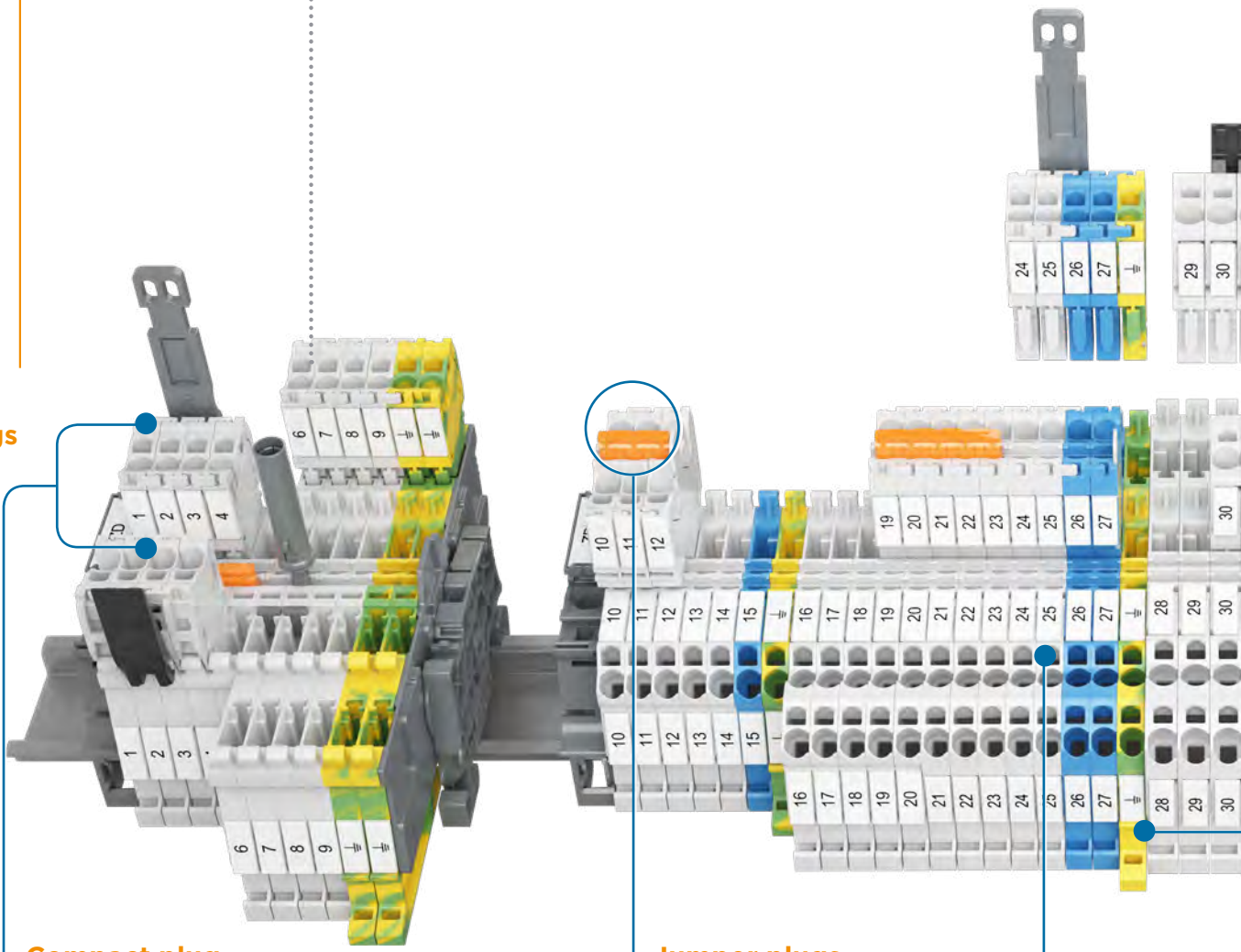

Plugs

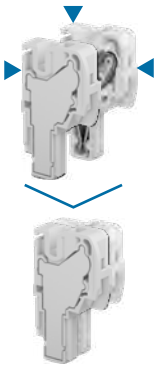

Compact plug
Save up to 15% in height

Reduced plug variants
Only two plugs variants to create assemblies

Jumper plugs
Plugs with 1 or 2 connection & jumper to ease potential distribution

Voltage test
Screwdriver entry point accepts category II probes

Screw clamp Pluggable

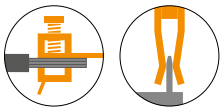

2x2
Connections
Double deck
Feed-through
Ground

4
Connections
Single deck
Feed-through

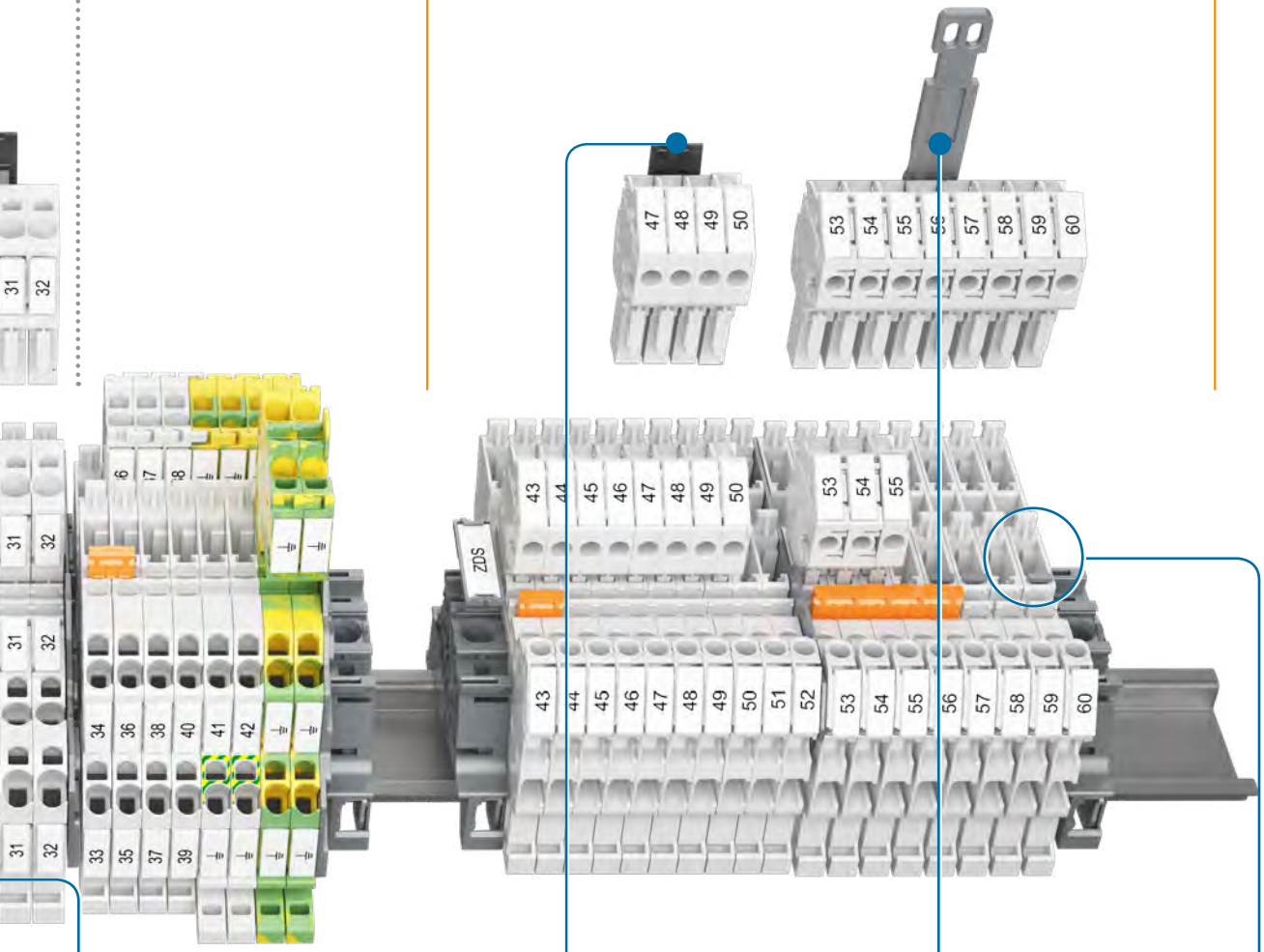

End section
No need of end section between 2.5 and 4 mm² terminal blocks

Cable clamp
Secure the wires ontov the plug when pulling the plug assembly

Locking device
Secure plug and wiring against accidental pulling

Convenient coding pegs
Guarantee error free plugs insertion

1SNK164013S0201

PI-Spring Pluggable

Single deck

Section		Feed-through		Ground	Feed-through			Ground	
2.5 mm²	12 AWG	ZD2.5-11	ZD2.5-22	ZD2.5-22-PE	ZDK2.5-11	ZDK2.5-21	ZDK2.5-22	ZDK2.5-11-PE	ZDK2.5-22-PE
4 mm²	10 AWG						ZDK4-22		

Double deck

Section		Feed-through		Feed-through + ground	Ground
2.5 mm²	12 AWG	ZDK2.5-D2	ZDK2.5-D1	ZDK2.5-D2-PE	ZDK2.5-D1-PE
4 mm²	10 AWG				

PI-Spring female plugs

Section		Closed		Closed		Closed		Closed		Closed		Closed	
2.5 mm²	12 AWG	CDK2.5	CDK2.5-E	CDK2.5-J	CDK2.5-J-E	CDK2.5-2P-J	CDK2.5-2P-J-E	CDK2.5-PE	CDK2.5-PE-E	CDK2.5-J-PE	CDK2.5-J-PE-E	CDK2.5-2P-J-PE	CDK2.5-2P-J-PE
4 mm²	10 AWG	CDK4	CDK4-E										

Screw clamp Pluggable

Single deck

Section		Feed-through
4 mm²	10 AWG	ZDS4-22 ZDS4-22-R1

Screw clamp female plugs

Section		Closed	
4 mm²	10 AWG	CDS4 CDS4-R1	CDS4-E

clamp - Channels for jumpering or testing - test socket - Blown-fuse indicator - male pluggable clamp - female pluggable clamp

1SNK164018S0201

PI-Spring Pluggable

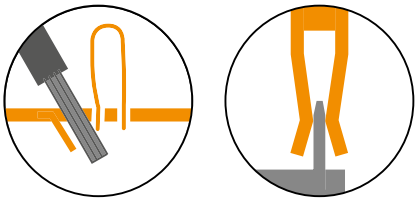

ZD2.5-11 PI-Spring pluggable terminal blocks

Feed-through - 5.2 mm 0.205 in spacing

2.5 mm²

12 AWG

ZD2.5-11

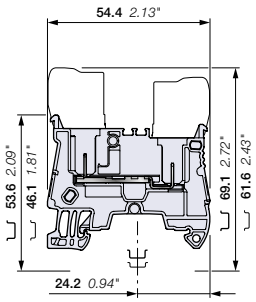

5.2 mm 0.205 in spacing

CDK2.5 CDK2.5-E

Description

- Increase your productivity with pluggable terminal blocks: possibility of pre-produced plugs harnesses, time saving plug and play assembly, reduced transportation panels preparation and final installation, easily connect sub-assemblies together,
- Simplify and secure your installation: in site faulty connection errors are eliminated, prior connection testing is eased and reliable, test connectors (TC5) withstanding 10 000 operations are compatible for convenient testing.

Ordering details

Description		Color	Type	Part Number		Pkg qty	Weight (1 pce) g
Feed-through	2 connections	Grey	ZD2.5-11	1SNK805016R0000		50	5.66

Main technical data

Connecting capacity		IEC	UL - CSA
1 conductor per clamp	Rigid: Solid/Stranded	0.2 ... 4 mm²	26 ... 12 AWG
	Flexible without ferrule	0.22 ... 2.5 mm²	
	Flexible with non insulated ferrule	0.22 ... 2.5 mm²	26 ... 14 AWG
	Flexible with insulated ferrule	0.22 ... 2.5 mm²	26 ... 14 AWG
2 conductors per clamp	Flexible with twin ferrule	0.22 ... 0.5 mm²	26 ... 20 AWG
Rated current / Rated cross section		22 A / 2.5 mm²	20 A / 12 AWG
Rated short-time withstand current (1s)		300 A	
Rated voltage		1000 V	600 V
Impulse withstand voltage		8000 V	
Protection		IP20	NEMA 1

Mounting instructions

Rail		TH 35-7.5, TH 35-15
Wire stripping length		11 mm 0.433 in
Tool (for flexible conductor without ferrule)		Ø 3.5 mm Ø 0.138 in

The connecting capacity data for one Rigid: Solid/Stranded, or one Flexible conductor (when applicable) is a mandatory information required by IEC, UL and CSA standards (Copper conductors). All other data are provided as supplementary information only. For more details, please consult our CB, UL or CSA certificates and technical datasheet available on http://www.TE.com

CE CB RoHS USR CNR CSA EAC BV

Female plugs

Description		Color	Type	Part Number		Pkg qty	Weight (1 pce) g
Female plugs	1 pole	Grey	CDK2.5	1SNK805712R0000		50	2.80
Female plugs without outer nubs - Closed	1 pole		CDK2.5-E	1SNK805713R0000		50	2.88

15 poles max.

Accessories

	Description			Color	Type	Part Number		Pkg qty	Weight (1 pce) g
1	**End stops**	5.2 mm	0.205 in	Dark grey	BAZ1	1SNK900002R0000		50	5.30
2	**End sections**	1.5 mm	0.059 in	Dark grey	EDK2.5-11	1SNK805915R0000		20	1.49
3	**Jumper bars**	2 poles	32 A (IEC)	Orange	JB5-2	1SNK905302R0000		50	1.30
		3 poles	32 A (IEC)		JB5-3	1SNK905303R0000		50	2.00
		4 poles	32 A (IEC)		JB5-4	1SNK905304R0000		50	2.70
		5 poles	32 A (IEC)		JB5-5	1SNK905305R0000		50	3.50
		10 poles	32 A (IEC)		JB5-10	1SNK905310R0000		30	7.10
		50 poles	32 A (IEC)		JB5-50	1SNK905350R0000		10	36.00
4	**Cross spacing jumpers**	3 poles	32 A (IEC)	Orange	JB85-3	1SNK900603R0000		10	2.80
5	**Circuit separators**	3 mm	0.118 in	Dark grey	CS-R2	1SNK900106R0000		20	3.80
6	**Test adapters**	For test plugs DIA 2 mm 0.079 in		Dark grey	TP2	1SNK900203R0000		20	1.70
		For test plugs DIA 4 mm 0.157 in			TP4	1SNK900205R0000		20	2.40
7	**Test connectors**	5.2 mm 0.205 in spacing		Dark grey	TC5	1SNK900200R0000		10	5.20
		End module, 5.2 mm 0.205 in			TC5-R1	1SNK900201R0000		10	5.20
8	**Coding pegs**			Dark grey	COP-ZD	1SNK900636R0000		10	3.57
9	**Terminal block markers**	Blank card		White	MC512	1SNK140000R0000		22	9.00
					MC512PA	1SNK149999R0000		20	10.00
		Blank marker			MG-CPM 13 41790	1SNB041790R0512		1960	0.236
		Universal wire markers holder		Grey	UMH	1SNK900611R0000		10	0.20

Complete list of accessories is indicated in the terminal block datasheet including end stops.
Some accessories such as jumper bars may modify the terminal block's ratings: Complete information available in the accessories section of the catalog.

Technical data valid for copper conductors only.

1SNK164020S0201

ZD2.5-22 PI-Spring pluggable terminal blocks

Feed-through - 5.2 mm 0.205 in spacing

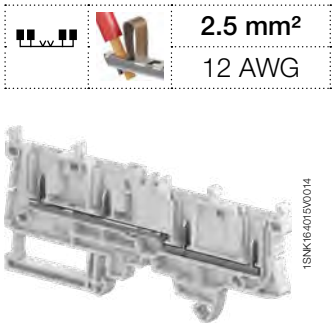

ZD2.5-22

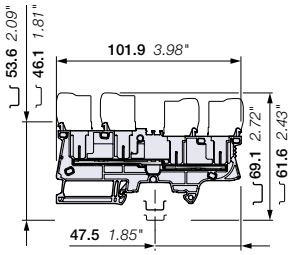

5.2 mm 0.205 in spacing

CDK2.5 CDK2.5-E

2.5 mm²

12 AWG

Description

- Increase your productivity with pluggable terminal blocks: possibility of pre-produced plugs harnesses, time saving plug and play assembly, reduced transportation panels preparation and final installation, easily connect sub-assemblies together,
- Simplify and secure your installation: in site faulty connection errors are eliminated, prior connection testing is eased and reliable, test connectors (TC5) withstanding 10 000 operations are compatible for convenient testing.

Ordering details

Description		Color	Type	Part Number		Pkg qty	Weight (1 pce) g
Feed-through	4 connections	Grey	ZD2.5-22	1SNK805017R0000		50	12.00

Main technical data

Connecting capacity		IEC	UL - CSA
1 conductor per clamp	Rigid: Solid/Stranded	0.2 ... 4 mm²	26 ... 12 AWG
	Flexible without ferrule	0.22 ... 2.5 mm²	
	Flexible with non insulated ferrule	0.22 ... 2.5 mm²	26 ... 14 AWG
	Flexible with insulated ferrule	0.22 ... 2.5 mm²	26 ... 14 AWG
2 conductors per clamp	Flexible with twin ferrule	0.22 ... 0.5 mm²	26 ... 20 AWG
Rated current / Rated cross section		22 A / 2.5 mm²	20 A / 12 AWG
Rated short-time withstand current (1s)		300 A	
Rated voltage		1000 V	600 V
Impulse withstand voltage		8000 V	
Protection		IP20	NEMA 1

Mounting instructions

Rail		TH 35-7.5, TH 35-15
Wire stripping length		11 mm 0.433 in
Tool (for flexible conductor without ferrule)		Flat screwdriver Ø 3.5 mm Ø 0.138 in

The connecting capacity data for one Rigid: Solid/Stranded, or one Flexible conductor (when applicable) is a mandatory information required by IEC, UL and CSA standards (Copper conductors). All other data are provided as supplementary information only. For more details, please consult our CB, UL or CSA certificates and technical datasheet available on http://www.TE.com

CE CB RoHS USR CNR CSA EAC BV

Female plugs

Description		Color	Type	Part Number		Pkg qty	Weight (1 pce) g
Female plugs	1 pole	Grey	CDK2.5	1SNK805712R0000		50	2.80
Female plugs without outer nubs - Closed	1 pole		CDK2.5-E	1SNK805713R0000		50	2.88

15 poles max.

Accessories

	Description			Color	Type	Part Number		Pkg qty	Weight (1 pce) g
1	**End stops**	5.2 mm	0.205 in	Dark grey	BAZ1	1SNK900002R0000		50	5.30
2	**End sections**	2.0 mm	0.079 in	Dark grey	ED2.5-22	1SNK805917R0000		20	3.64
3	**Jumper bars**	2 poles	32 A (IEC)	Orange	JB5-2	1SNK905302R0000		50	1.30
		3 poles	32 A (IEC)		JB5-3	1SNK905303R0000		50	2.00
		4 poles	32 A (IEC)		JB5-4	1SNK905304R0000		50	2.70
		5 poles	32 A (IEC)		JB5-5	1SNK905305R0000		50	3.50
		10 poles	32 A (IEC)		JB5-10	1SNK905310R0000		30	7.10
		50 poles	32 A (IEC)		JB5-50	1SNK905350R0000		10	36.00
4	**Cross spacing jumpers**	3 poles	32 A (IEC)	Orange	JB85-3	1SNK900603R0000		10	2.80
5	**Circuit separators**	3 mm	0.118 in	Dark grey	CS-R3	1SNK900107R0000		20	6.40
6	**Test adapters**	For test plugs DIA 2 mm 0.079 in		Dark grey	TP2	1SNK900203R0000		20	1.70
		For test plugs DIA 4 mm 0.157 in			TP4	1SNK900205R0000		20	2.40
7	**Test connectors**	5.2 mm 0.205 in spacing		Dark grey	TC5	1SNK900200R0000		10	5.20
		End module, 5.2 mm 0.205 in			TC5-R1	1SNK900201R0000		10	5.20
8	**Coding pegs**			Dark grey	COP-ZD	1SNK900636R0000		10	3.57
9	**Terminal block markers**	Blank card		White	MC512	1SNK140000R0000		22	9.00
					MC512PA	1SNK149999R0000		20	10.00
		Blank marker			MG-CPM 13 41790	1SNB041790R0512		1960	0.236
		Universal wire markers holder		Grey	UMH	1SNK900611R0000		10	0.20

Complete list of accessories is indicated in the terminal block datasheet including end stops.
Some accessories such as jumper bars may modify the terminal block's ratings: Complete information available in the accessories section of the catalog.

Technical data valid for copper conductors only.

1SNK164021S0201

4

ZD2.5-22-PE PI-Spring pluggable terminal blocks

Ground - 5.2 mm 0.205 in spacing

2.5 mm²

12 AWG

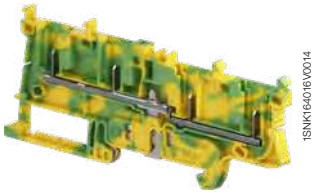

1SNK164016V0014

ZD2.5-22-PE

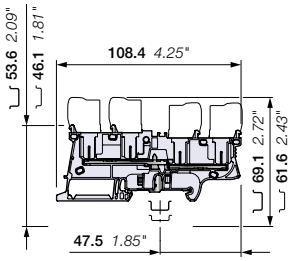

5.2 mm 0.205 in spacing

Description

- Increase your productivity with pluggable terminal blocks: possibility of pre-produced plugs harnesses, time saving plug and play assembly, reduced transportation panels preparation and final installation, easily connect sub-assemblies together,
- Simplify and secure your installation: in site faulty connection errors are eliminated, prior connection testing is eased and reliable, test connectors (TC5) withstanding 10 000 operations are compatible for convenient testing.

Ordering details

Description		Color	Type	Part Number		Pkg qty	Weight (1 pce) g
Ground	4 connections	Green-yellow	ZD2.5-22-PE	1SNK805156R0000		50	14.80

Main technical data

Connecting capacity		IEC	UL - CSA
1 conductor per clamp	Rigid: Solid/Stranded	0.2 ... 4 mm²	26 ... 12 AWG
	Flexible without ferrule	0.22 ... 2.5 mm²	
	Flexible with non insulated ferrule	0.22 ... 2.5 mm²	26 ... 14 AWG
	Flexible with insulated ferrule	0.22 ... 2.5 mm²	26 ... 14 AWG
Rated cross section		2.5 mm²	12 AWG
Rated short-time withstand current (1s)		300 A	396 A
Protection		IP20	NEMA 1

Mounting instructions

Rail		TH 35-7.5, TH 35-15
Wire stripping length		11 mm 0.433 in
Tool (for flexible conductor without ferrule)		Flat screwdriver Ø 3.5 mm Ø 0.138 in

The connecting capacity data for one Rigid: Solid/Stranded, or one Flexible conductor (when applicable) is a mandatory information required by IEC, UL and CSA standards (Copper conductors). All other data are provided as supplementary information only. For more details, please consult our CB, UL or CSA certificates and technical datasheet available on http://www.TE.com

CE CB RoHS USR CNR CSA EAC BV

CDK2.5-PE CDK2.5-PE-E

Female plugs

Description		Color	Type	Part Number		Pkg qty	Weight (1 pce) g
Female plugs	1 pole	Green-yellow	CDK2.5-PE	1SNK805750R0000		50	2.80
Female plugs without outer nubs - Closed	1 pole		CDK2.5-PE-E	1SNK805753R0000		50	2.88

15 poles max.

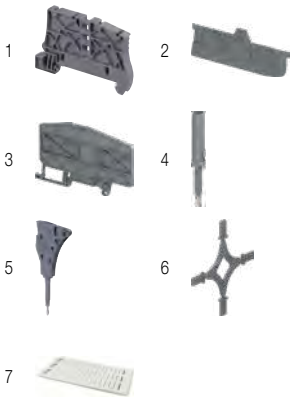

Accessories

	Description			Color	Type	Part Number		Pkg qty	Weight (1 pce) g
1	**End stops**	5.2 mm	0.205 in	Dark grey	BAZ1	1SNK900002R0000		50	5.30
2	**End sections**	2.0 mm	0.079 in	Dark grey	ED2.5-22	1SNK805917R0000		20	3.64
3	**Circuit separators**	3 mm	0.118 in	Dark grey	CS-R3	1SNK900107R0000		20	6.40
4	**Test adapters**	For test plugs DIA 2 mm 0.079 in		Dark grey	TP2	1SNK900203R0000		20	1.70
		For test plugs DIA 4 mm 0.157 in			TP4	1SNK900205R0000		20	2.40
5	**Test connectors**	5.2 mm 0.205 in spacing		Dark grey	TC5	1SNK900200R0000		10	5.20
		End module, 5.2 mm 0.205 in			TC5-R1	1SNK900201R0000		10	5.20
6	**Coding pegs**			Dark grey	COP-ZD	1SNK900636R0000		10	3.57
7	**Terminal block markers**	Blank card		White	MC512	1SNK140000R0000		22	9.00
					MC512PA	1SNK149999R0000		20	10.00
		Blank marker			MG-CPM 13 41790	1SNB041790R0512		1960	0.236
		Universal wire markers holder		Grey	UMH	1SNK900611R0000		10	0.20

Complete list of accessories is indicated in the terminal block datasheet including end stops.
Some accessories such as jumper bars may modify the terminal block's ratings: Complete information available in the accessories section of the catalog.

Technical data valid for copper conductors only.

1SNK164022S0201

ZDK2.5-11 PI-Spring pluggable terminal blocks

Feed-through - 5.2 mm 0.205 in spacing

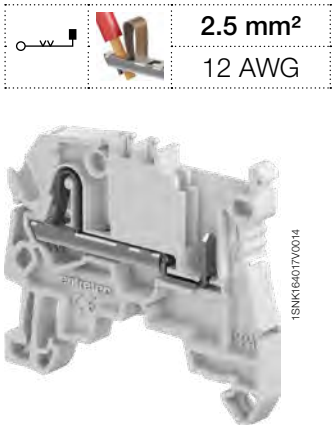

2.5 mm²
12 AWG

1SNK164017V0014

ZDK2.5-11

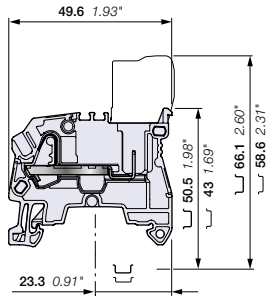

5.2 mm 0.205 in spacing

CDK2.5 CDK2.5-E CDK2.5-BL CDK2.5-BL-E

Description

- Increase your productivity with pluggable terminal blocks: possibility of pre-produced plugs harnesses, time saving plug and play assembly, reduced transportation panels preparation and final installation, easily connect sub-assemblies together,
- Simplify and secure your installation: in site faulty connection errors are eliminated, prior connection testing is eased and reliable, test connectors (TC5) withstanding 10 000 operations are compatible for convenient testing.

Ordering details

Description		Color	Type	Part Number		Pkg qty	Weight (1 pce) g
Feed-through	2 connections	Grey	ZDK2.5-11	1SNK805015R0000		50	7.00
		Blue	ZDK2.5-11-BL	1SNK805025R0000		50	7.00

Main technical data

Connecting capacity		IEC	UL - CSA
1 conductor per clamp	Rigid: Solid/Stranded	0.2 ... 4 mm²	26 ... 12 AWG
	Flexible without ferrule	0.22 ... 2.5 mm²	
	Flexible with non insulated ferrule	0.22 ... 2.5 mm²	26 ... 14 AWG
	Flexible with insulated ferrule	0.22 ... 2.5 mm²	26 ... 14 AWG
2 conductors per clamp	Flexible with twin ferrule	0.22 ... 0.5 mm²	26 ... 20 AWG
Rated current / Rated cross section		24 A / 2.5 mm²	20 A / 12 AWG
Rated short-time withstand current (1s)		300 A	
Rated voltage		1000 V	600 V
Impulse withstand voltage		8000 V	
Protection		IP20	NEMA 1

Mounting instructions

Rail		TH 35-7.5, TH 35-15
Wire stripping length		11 mm 0.433 in
Tool (for flexible conductor without ferrule)		Flat screwdriver Ø 3.5 mm Ø 0.138 in

The connecting capacity data for one Rigid: Solid/Stranded, or one Flexible conductor (when applicable) is a mandatory information required by IEC, UL and CSA standards (Copper conductors). All other data are provided as supplementary information only. For more details, please consult our CB, UL or CSA certificates and technical datasheet available on http://www.TE.com

CE CB RoHS USR CNR CSA EAC BV

Female plugs

Description		Color	Type	Part Number		Pkg qty	Weight (1 pce) g
Female plugs	1 pole	Grey	CDK2.5	1SNK805712R0000		50	2.80
Female plugs without outer nubs - Closed	1 pole		CDK2.5-E	1SNK805713R0000		50	2.88
Female plugs	1 pole	Blue	CDK2.5-BL	1SNK805742R0000		50	2.80
Female plugs without outer nubs - Closed	1 pole		CDK2.5-BL-E	1SNK805743R0000		50	2.88

15 poles max.

Accessories

	Description			Color	Type	Part Number		Pkg qty	Weight (1 pce) g
1	**End stops**	5.2 mm	0.205 in	Dark grey	BAZ1	1SNK900002R0000		50	5.30
2	**End sections**	1.5 mm	0.059 in	Dark grey	EDK2.5-11	1SNK805915R0000		20	1.49
3	**Jumper bars**	2 poles	32 A (IEC)	Orange	JB5-2	1SNK905302R0000		50	1.30
		3 poles	32 A (IEC)		JB5-3	1SNK905303R0000		50	2.00
		4 poles	32 A (IEC)		JB5-4	1SNK905304R0000		50	2.70
		5 poles	32 A (IEC)		JB5-5	1SNK905305R0000		50	3.50
		10 poles	32 A (IEC)		JB5-10	1SNK905310R0000		30	7.10
		50 poles	32 A (IEC)		JB5-50	1SNK905350R0000		10	36.00
4	**Cross spacing jumpers**	3 poles	32 A (IEC)	Orange	JB85-3	1SNK900603R0000		10	2.80
5	**Circuit separators**	3 mm	0.118 in	Dark grey	CS-R2	1SNK900106R0000		20	3.80
6	**Test adapters**	For test plugs DIA 2 mm 0.079 in		Dark grey	TP2	1SNK900203R0000		20	1.70
		For test plugs DIA 4 mm 0.157 in			TP4	1SNK900205R0000		20	2.40
7	**Test connectors**	5.2 mm 0.205 in spacing		Dark grey	TC5	1SNK900200R0000		10	5.20
		End module, 5.2 mm 0.205 in			TC5-R1	1SNK900201R0000		10	5.20
8	**Coding pegs**			Dark grey	COP-ZD	1SNK900636R0000		10	3.57
9	**Terminal block markers**	Blank card		White	MC512	1SNK140000R0000		22	9.00
					MC512PA	1SNK149999R0000		20	10.00
		Blank marker			MG-CPM 13 41790	1SNB041790R0512		1960	0.236
		Universal wire markers holder		Grey	UMH	1SNK900611R0000		10	0.20

Complete list of accessories is indicated in the terminal block datasheet including end stops.
Some accessories such as jumper bars may modify the terminal block's ratings: Complete information available in the accessories section of the catalog.

Technical data valid for copper conductors only.

1SNK164023S0201

4

ZDK2.5-21 PI-Spring pluggable terminal blocks

Feed-through - 5.2 mm 0.205 in spacing

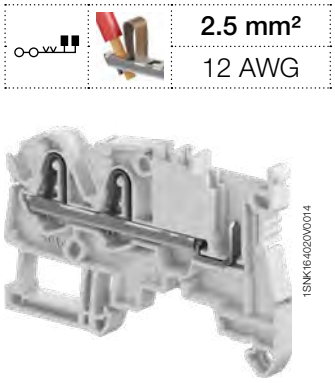

2.5 mm²
12 AWG

1SNK164020V0014

ZDK2.5-21

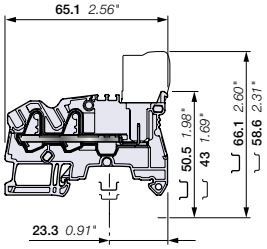

5.2 mm 0.205 in spacing

Description

- Increase your productivity with pluggable terminal blocks: possibility of pre-produced plugs harnesses, time saving plug and play assembly, reduced transportation panels preparation and final installation, easily connect sub-assemblies together,
- Simplify and secure your installation: in site faulty connection errors are eliminated, prior connection testing is eased and reliable, test connectors (TC5) withstanding 10 000 operations are compatible for convenient testing.

Ordering details

Description		Color	Type	Part Number		Pkg qty	Weight (1 pce) g
Feed-through	3 connections	Grey	ZDK2.5-21	1SNK805014R0000		50	7.47

Main technical data

Connecting capacity		IEC	UL - CSA
1 conductor per clamp	Rigid: Solid/Stranded	0.2 ... 4 mm²	26 ... 12 AWG
	Flexible without ferrule	0.22 ... 2.5 mm²	
	Flexible with non insulated ferrule	0.22 ... 2.5 mm²	26 ... 14 AWG
	Flexible with insulated ferrule	0.22 ... 2.5 mm²	26 ... 14 AWG
2 conductors per clamp	Flexible with twin ferrule	0.22 ... 0.5 mm²	26 ... 20 AWG
Rated current / Rated cross section		24 A / 2.5 mm²	20 A / 12 AWG
Rated short-time withstand current (1s)		300 A	
Rated voltage		1000 V	600 V
Impulse withstand voltage		8000 V	
Protection		IP20	NEMA 1

Mounting instructions

Rail		TH 35-7.5, TH 35-15
Wire stripping length		11 mm 0.433 in
Tool (for flexible conductor without ferrule)		Flat screwdriver Ø 3.5 mm Ø 0.138 in

The connecting capacity data for one Rigid: Solid/Stranded, or one Flexible conductor (when applicable) is a mandatory information required by IEC, UL and CSA standards (Copper conductors). All other data are provided as supplementary information only. For more details, please consult our CB, UL or CSA certificates and technical datasheet available on http://www.TE.com

CE CB RoHS USR CNR CSA EAC BV

CDK2.5 CDK2.5-E

Female plugs

Description		Color	Type	Part Number		Pkg qty	Weight (1 pce) g
Female plugs	1 pole	Grey	CDK2.5	1SNK805712R0000		50	2.80
Female plugs without outer nubs - Closed	1 pole		CDK2.5-E	1SNK805713R0000		50	2.88

15 poles max.

Accessories

	Description			Color	Type	Part Number		Pkg qty	Weight (1 pce) g
1	**End stops**	5.2 mm	0.205 in	Dark grey	BAZ1	1SNK900002R0000		50	5.30
2	**End sections**	1.5 mm	0.059 in	Dark grey	EDK2.5-21	1SNK805914R0000		20	1.90
3	**Jumper bars**	2 poles	32 A (IEC)	Orange	JB5-2	1SNK905302R0000		50	1.30
		3 poles	32 A (IEC)		JB5-3	1SNK905303R0000		50	2.00
		4 poles	32 A (IEC)		JB5-4	1SNK905304R0000		50	2.70
		5 poles	32 A (IEC)		JB5-5	1SNK905305R0000		50	3.50
		10 poles	32 A (IEC)		JB5-10	1SNK905310R0000		30	7.10
		50 poles	32 A (IEC)		JB5-50	1SNK905350R0000		10	36.00
4	**Cross spacing jumpers**	3 poles	32 A (IEC)	Orange	JB85-3	1SNK900603R0000		10	2.80
5	**Circuit separators**	3 mm	0.118 in	Dark grey	CS-R3	1SNK900107R0000		20	6.40
6	**Test adapters**	For test plugs DIA 2 mm 0.079 in		Dark grey	TP2	1SNK900203R0000		20	1.70
		For test plugs DIA 4 mm 0.157 in			TP4	1SNK900205R0000		20	2.40
7	**Test connectors**	5.2 mm 0.205 in spacing		Dark grey	TC5	1SNK900200R0000		10	5.20
		End module, 5.2 mm 0.205 in			TC5-R1	1SNK900201R0000		10	5.20
8	**Coding pegs**			Dark grey	COP-ZD	1SNK900636R0000		10	3.57
9	**Terminal block markers**	Blank card		White	MC512	1SNK140000R0000		22	9.00
					MC512PA	1SNK149999R0000		20	10.00
		Blank marker			MG-CPM 13 41790	1SNB041790R0512		1960	0.236
		Universal wire markers holder		Grey	UMH	1SNK900611R0000		10	0.20

Complete list of accessories is indicated in the terminal block datasheet including end stops.
Some accessories such as jumper bars may modify the terminal block's ratings: Complete information available in the accessories section of the catalog.

Technical data valid for copper conductors only.

1SNK164025S0201

ZDK2.5-22 PI-Spring pluggable terminal blocks

Feed-through - 5.2 mm 0.205 in spacing

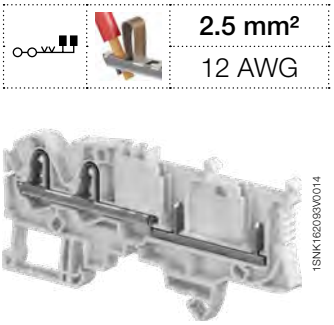

2.5 mm²
12 AWG

1SNK162093V0014

ZDK2.5-22

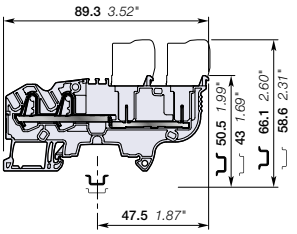

5.2 mm 0.205 in spacing

Description

- Increase your productivity with pluggable terminal blocks: possibility of pre-produced plugs harnesses, time saving plug and play assembly, reduced transportation panels preparation and final installation, easily connect sub-assemblies together,
- Simplify and secure your installation: in site faulty connection errors are eliminated, prior connection testing is eased and reliable, test connectors (TC5) withstanding 10 000 operations are compatible for convenient testing.

Ordering details

Description		Color	Type	Part number		Pkg qty	Weight (1 pce) g
Feed-through	4 connections	Grey	ZDK2.5-22	1SNK805010R0000		50	9.60
Feed-through	4 connections	Blue	ZDK2.5-22-BL	1SNK805020R0000		50	9.60

Main technical data

Connecting capacity		IEC	UL - CSA
1 conductor per clamp	Rigid: Solid/Stranded	0.2 ... 4 mm²	26 ... 12 AWG
	Flexible without ferrule	0.22 ... 2.5 mm²	
	Flexible with non insulated ferrule	0.22 ... 2.5 mm²	26 ... 14 AWG
	Flexible with insulated ferrule	0.22 ... 2.5 mm²	26 ... 14 AWG
2 conductors per clamp	Flexible with twin ferrule	0.22 ... 0.5 mm²	26 ... 20 AWG
Rated current / Rated cross section		24 A / 2.5 mm²	22 A / 12 AWG
Rated short-time withstand current (1s)		300 A	
Rated voltage		1000 V	600 V
Impulse withstand voltage		8000 V	
Protection		IP20	NEMA 1

Mounting instructions

Rail		TH 35-7.5, TH 35-15
Wire stripping length		11 mm 0.433 in
Tool (for flexible conductor without ferrule)		Flat screwdriver Ø 3.5 mm Ø 0.138 in

The connecting capacity data for one Rigid: Solid/Stranded, or one Flexible conductor (when applicable) is a mandatory information required by IEC, UL and CSA standards (Copper conductors). All other data are provided as supplementary information only. For more details, please consult our CB, UL or CSA certificates and technical datasheet available on http://www.TE.com

CE | CB | RoHS | USR CNR | CSA | EAC | BV

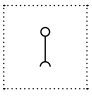

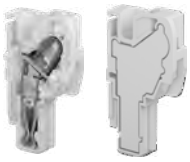

CDK2.5 CDK2.5-E

Female plugs

Description		Color	Type	Part number		Pkg qty	Weight (1 pce) g
Female plugs	1 pole	Grey	CDK2.5	1SNK805712R0000		50	2.80
Female plugs without outer nubs - Closed			CDK2.5-E	1SNK805713R0000		50	2.80

15 poles max.

Accessories

	Description			Color	Type	Part number		Pkg qty	Weight (1 pce) g
1	**End stops**	5.2 mm	0.205 in	Dark grey	BAZ1	1SNK900002R0000		50	5.30
2	**End sections**	2.2 mm	0.087 in	Dark grey	EDK2.5-22	1SNK805910R0000		20	3.15
3	**Jumper bars**	2 poles	32 A (IEC)	Orange	JB5-2	1SNK905302R0000		50	1.30
		3 poles	32 A (IEC)		JB5-3	1SNK905303R0000		50	2.00
		4 poles	32 A (IEC)		JB5-4	1SNK905304R0000		50	2.70
		5 poles	32 A (IEC)		JB5-5	1SNK905305R0000		50	3.50
		10 poles	32 A (IEC)		JB5-10	1SNK905310R0000		30	7.10
		50 poles	32 A (IEC)		JB5-50	1SNK905350R0000		10	36.00
4	**Cross spacing jumpers**	3 poles	32 A (IEC)	Orange	JB85-3	1SNK900603R0000		10	2.80
5	**Circuit separators**	3 mm	0.118 in	Dark grey	CS-R3	1SNK900107R0000		20	6.40
6	**Test adapters**	For test plugs DIA 2 mm 0.079 in		Dark grey	TP2	1SNK900203R0000		20	1.70
		For test plugs DIA 4 mm 0.157 in			TP4	1SNK900205R0000		20	2.40
7	**Test connectors**	5.2 mm 0.205 in spacing		Dark grey	TC5	1SNK900200R0000		10	5.20
		End module, 5.2 mm 0.205 in			TC5-R1	1SNK900201R0000		10	5.20
8	**Coding pegs**			Dark grey	COP-ZD	1SNK900636R0000		10	3.57
9	**Terminal block markers**	Blank marker		White	MG-CPM 13 41790	1SNB041790R0512		1960	0.23
		Blank card			MC512	1SNK140000R0000		22	9.00
					MC512PA	1SNK149999R0000		20	10.00
		Universal wire markers holder		Grey	UMH	1SNK900611R0000		10	0.20

Complete list of accessories is indicated in the terminal block datasheet including end stops.
Some accessories such as jumper bars may modify the terminal block's ratings: Complete information available in the accessories section of the catalog.

Technical data valid for copper conductors only.

1SNK164001S0201

ZDK4-22 PI-Spring pluggable terminal blocks

Feed-through - 6 mm 0.236 in spacing

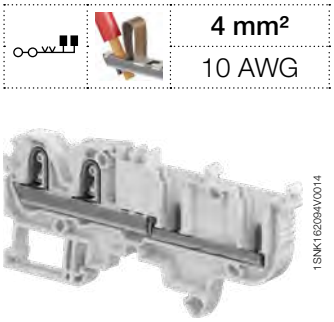

4 mm²
10 AWG

1SNK162094V0014

ZDK4-22

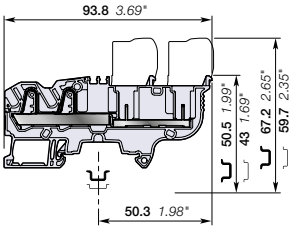

6 mm 0.236 in spacing

Description

- Increase your productivity with pluggable terminal blocks: possibility of pre-produced plugs harnesses, time saving plug and play assembly, reduced transportation panels preparation and final installation, easily connect sub-assemblies together,
- Simplify and secure your installation: in site faulty connection errors are eliminated, prior connection testing is eased and reliable, test connectors (TC5-R1 + ES-TC6) withstanding 10 000 operations are compatible for convenient testing.

Ordering details

Description		Color	Type	Part Number		Pkg qty	Weight (1 pce) g
Feed-through	4 connections	Grey	ZDK4-22	1SNK806010R0000		50	14.30

Main technical data

Connecting capacity		IEC	UL - CSA
1 conductor per clamp	Rigid: Solid/Stranded	0.5 ... 6 mm²	26 ... 10 AWG
	Flexible without ferrule	0.5 ... 4 mm²	
	Flexible with non insulated ferrule	0.5 ... 4 mm²	26 ... 12 AWG
	Flexible with insulated ferrule	0.5 ... 4 mm²	26 ... 12 AWG
2 conductors per clamp	Flexible with twin ferrule	0.5 ... 1 mm²	26 ... 18 AWG
Rated current / Rated cross section		30 A / 4 mm²	30 A / 10 AWG
Rated short-time withstand current (1s)		480 A	
Rated voltage		1000 V	600 V
Impulse withstand voltage		8000 V	
Protection		IP20	NEMA 1

Mounting instructions

Rail		TH 35-7.5, TH 35-15
Wire stripping length		12.5 mm 0.492 in
Tool (for flexible conductor without ferrule)		Flat screwdriver Ø 3.5 mm Ø 0.138 in

The connecting capacity data for one Rigid: Solid/Stranded, or one Flexible conductor (when applicable) is a mandatory information required by IEC, UL and CSA standards (Copper conductors). All other data are provided as supplementary information only. For more details, please consult our CB, UL or CSA certificates and technical datasheet available on http://www.TE.com

CE | CB | RoHS | USR CNR | CSA | EAC | BV

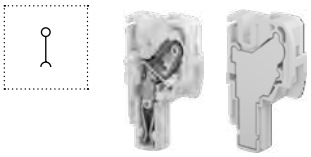

CDK4 CDK4-E

Female plugs

Description		Color	Type	Part Number		Pkg qty	Weight (1 pce) g
Female plugs	1 pole	Grey	CDK4	1SNK806712R0000		50	3.80
Female plugs without outer nubs - Closed			CDK4-E	1SNK806713R0000		50	4.50

15 poles max.

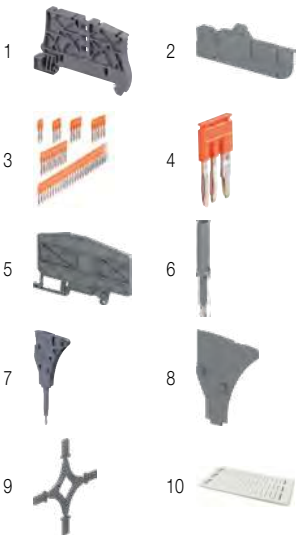

Accessories

	Description			Color	Type	Part Number		Pkg qty	Weight (1 pce) g
1	**End stops**	5.2 mm	0.205 in	Dark grey	BAZ1	1SNK900002R0000		50	5.30
2	**End sections**	2.2 mm	0.087 in	Dark grey	EDK2.5-22	1SNK805910R0000		20	3.15
3	**Jumper bars**	2 poles	41 A (IEC)	Orange	JB6-2	1SNK906302R0000		50	1.30
		3 poles	41 A (IEC)		JB6-3	1SNK906303R0000		50	2.10
		4 poles	41 A (IEC)		JB6-4	1SNK906304R0000		50	2.90
		5 poles	41 A (IEC)		JB6-5	1SNK906305R0000		50	3.60
		10 poles	41 A (IEC)		JB6-10	1SNK906310R0000		20	7.40
		50 poles	41 A (IEC)		JB6-50	1SNK906350R0000		10	38.10
4	**Cross spacing jumpers**	3 poles	32 A (IEC)	Orange	JB85-3	1SNK900603R0000		10	2.80
5	**Circuit separators**	3 mm	0.118 in	Dark grey	CS-R3	1SNK900107R0000		20	6.40
6	**Test adapters**	For test plugs DIA 2 mm 0.079 in		Dark grey	TP2	1SNK900203R0000		20	1.70
		For test plugs DIA 4 mm 0.157 in			TP4	1SNK900205R0000		20	2.40
7	**Test connectors**	End module, 5.2 mm 0.205 in		Dark grey	TC5-R1	1SNK900201R0000		10	5.20
8	**Spacers**	0.8 mm	0.031 in	Dark grey	ES-TC6	1SNK900105R0000		10	0.80
9	**Coding pegs**			Dark grey	COP-ZD	1SNK900636R0000		10	3.57
10	**Terminal block markers**	Blank marker		White	MG-CPM 13 41791	1SNB041791R0612		1680	0.27
		Blank card			MC612	1SNK150000R0000		22	10.00
					MC612PA	1SNK159999R0000		20	11.00
		Universal wire markers holder		Grey	UMH	1SNK900611R0000		10	0.20

Complete list of accessories is indicated in the terminal block datasheet including end stops.
Some accessories such as jumper bars may modify the terminal block's ratings: Complete information available in the accessories section of the catalog.

1SNK164002S0201

Technical data valid for copper conductors only.

ZDK2.5-11-PE PI-Spring pluggable terminal blocks
Ground - 5.2 mm 0.205 in spacing

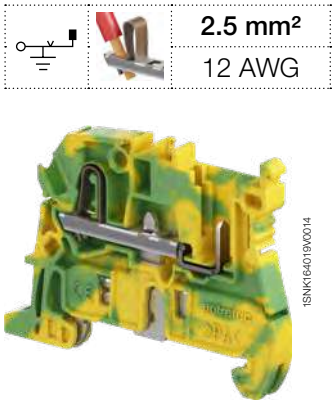

2.5 mm²	
12 AWG	

1SNK164019V0014

ZDK2.5-11-PE

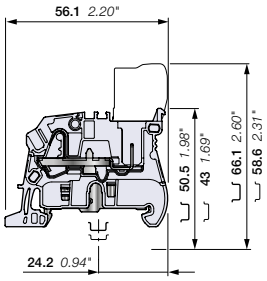

5.2 mm 0.205 in spacing

CDK2.5-PE CDK2.5-PE-E

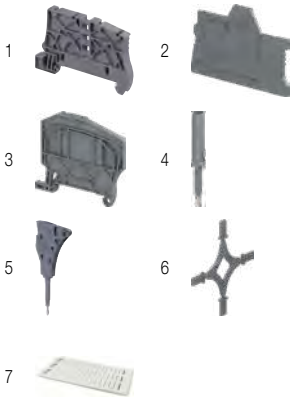

Description

- Increase your productivity with pluggable terminal blocks: possibility of pre-produced plugs harnesses, time saving plug and play assembly, reduced transportation panels preparation and final installation, easily connect sub-assemblies together,
- Simplify and secure your installation: in site faulty connection errors are eliminated, prior connection testing is eased and reliable, test connectors (TC5) withstanding 10 000 operations are compatible for convenient testing.

Ordering details

Description		Color	Type	Part Number		Pkg qty	Weight (1 pce) g
Ground	2 connections	Green-yellow	ZDK2.5-11-PE	1SNK805150R0000		50	9.62

Main technical data

Connecting capacity		IEC	UL - CSA
1 conductor per clamp	Rigid: Solid/Stranded	0.2 ... 4 mm²	26 ... 12 AWG
	Flexible without ferrule	0.22 ... 2.5 mm²	
	Flexible with non insulated ferrule	0.22 ... 2.5 mm²	26 ... 14 AWG
	Flexible with insulated ferrule	0.22 ... 2.5 mm²	26 ... 14 AWG
Rated cross section		2.5 mm²	12 AWG
Rated short-time withstand current (1s)		300 A	396 A
Protection		IP20	NEMA 1

Mounting instructions

Rail		TH 35-7.5, TH 35-15
Wire stripping length		11 mm 0.433 in
Tool (for flexible conductor without ferrule)		Flat screwdriver Ø 3.5 mm Ø 0.138 in

The connecting capacity data for one Rigid: Solid/Stranded, or one Flexible conductor (when applicable) is a mandatory information required by IEC, UL and CSA standards (Copper conductors). All other data are provided as supplementary information only. For more details, please consult our CB, UL or CSA certificates and technical datasheet available on http://www.TE.com

CE CB RoHS USR CNR CSA EAC BV

Female plugs

Description		Color	Type	Part Number		Pkg qty	Weight (1 pce) g
Female plugs	1 pole	Green-yellow	CDK2.5-PE	1SNK805750R0000		50	2.80
Female plugs without outer nubs - Closed	1 pole		CDK2.5-PE-E	1SNK805753R0000		50	2.88

15 poles max.

Accessories

	Description			Color	Type	Part Number		Pkg qty	Weight (1 pce) g
1	**End stops**	5.2 mm	0.205 in	Dark grey	BAZ1	1SNK900002R0000		50	5.30
2	**End sections**	1.5 mm	0.059 in	Dark grey	EDK2.5-11	1SNK805915R0000		20	1.49
3	**Circuit separators**	3 mm	0.118 in	Dark grey	CS-R2	1SNK900106R0000		20	3.80
4	**Test adapters**	For test plugs DIA 2 mm 0.079 in		Dark grey	TP2	1SNK900203R0000		20	1.70
		For test plugs DIA 4 mm 0.157 in			TP4	1SNK900205R0000		20	2.40
5	**Test connectors**	5.2 mm 0.205 in spacing		Dark grey	TC5	1SNK900200R0000		10	5.20
		End module, 5.2 mm 0.205 in			TC5-R1	1SNK900201R0000		10	5.20
6	**Coding pegs**			Dark grey	COP-ZD	1SNK900636R0000		10	3.57
7	**Terminal block markers**	Blank card		White	MC512	1SNK140000R0000		22	9.00
					MC512PA	1SNK149999R0000		20	10.00
		Blank marker			MG-CPM 13 41790	1SNB041790R0512		1960	0.236
		Universal wire markers holder		Grey	UMH	1SNK900611R0000		10	0.20

Complete list of accessories is indicated in the terminal block datasheet including end stops.
Some accessories such as jumper bars may modify the terminal block's ratings: Complete information available in the accessories section of the catalog.

Technical data valid for copper conductors only.

1SNK164024S0201

ZDK2.5-22-PE PI-Spring pluggable terminal blocks

Feed-through - 5.2 mm 0.205 in spacing

2.5 mm²

12 AWG

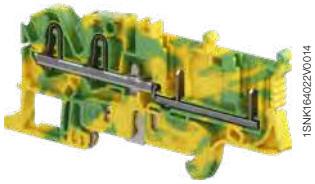

1SNK164022V0014

ZDK2.5-22-PE

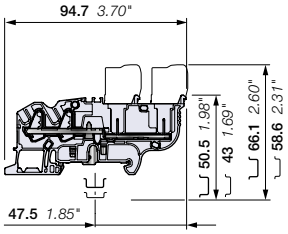

5.2 mm 0.205 in spacing

Description

- Increase your productivity with pluggable terminal blocks: possibility of pre-produced plugs harnesses, time saving plug and play assembly, reduced transportation panels preparation and final installation, easily connect sub-assemblies together,
- Simplify and secure your installation: in site faulty connection errors are eliminated, prior connection testing is eased and reliable, test connectors (TC5) withstanding 10 000 operations are compatible for convenient testing.

Ordering details

Description		Color	Type	Part Number		Pkg qty	Weight (1 pce) g
Ground	4 connections	Green-yellow	ZDK2.5-22-PE	1SNK805152R0000		50	14.05

Main technical data

Connecting capacity		IEC	UL - CSA
1 conductor per clamp	Rigid: Solid/Stranded	0.2 ... 4 mm²	26 ... 12 AWG
	Flexible without ferrule	0.22 ... 2.5 mm²	
	Flexible with non insulated ferrule	0.22 ... 2.5 mm²	26 ... 14 AWG
	Flexible with insulated ferrule	0.22 ... 2.5 mm²	26 ... 14 AWG
Rated cross section		2.5 mm²	12 AWG
Rated short-time withstand current (1s)		300 A	396 A
Protection		IP20	NEMA 1

Mounting instructions

Rail		TH 35-7.5, TH 35-15
Wire stripping length		11 mm 0.433 in
Tool (for flexible conductor without ferrule)		Flat screwdriver Ø 3.5 mm Ø 0.138 in

The connecting capacity data for one Rigid: Solid/Stranded, or one Flexible conductor (when applicable) is a mandatory information required by IEC, UL and CSA standards (Copper conductors). All other data are provided as supplementary information only. For more details, please consult our CB, UL or CSA certificates and technical datasheet available on http://www.TE.com

CE CB RoHS USR CNR CSA EAC BV

CDK2.5-PE CDK2.5-PE-E

Female plugs

Description		Color	Type	Part Number		Pkg qty	Weight (1 pce) g
Female plugs	1 pole	Green-yellow	CDK2.5-PE	1SNK805750R0000		50	2.80
Female plugs without outer nubs - Closed	1 pole		CDK2.5-PE-E	1SNK805753R0000		50	2.88

15 poles max.

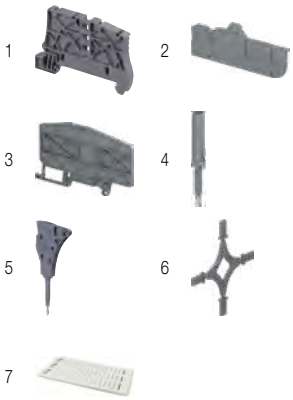

Accessories

	Description			Color	Type	Part Number		Pkg qty	Weight (1 pce) g
1	**End stops**	5.2 mm	0.205 in	Dark grey	BAZ1	1SNK900002R0000		50	5.30
2	**End sections**	2.2 mm	0.087 in	Dark grey	EDK2.5-22	1SNK805910R0000		20	3.15
3	**Circuit separators**	3 mm	0.118 in	Dark grey	CS-R3	1SNK900107R0000		20	6.40
4	**Test adapters**	For test plugs DIA 2 mm 0.079 in		Dark grey	TP2	1SNK900203R0000		20	1.70
		For test plugs DIA 4 mm 0.157 in			TP4	1SNK900205R0000		20	2.40
5	**Test connectors**	5.2 mm 0.205 in spacing		Dark grey	TC5	1SNK900200R0000		10	5.20
		End module, 5.2 mm 0.205 in			TC5-R1	1SNK900201R0000		10	5.20
6	**Coding pegs**			Dark grey	COP-ZD	1SNK900636R0000		10	3.57
7	**Terminal block markers**	Blank card		White	MC512	1SNK140000R0000		22	9.00
					MC512PA	1SNK149999R0000		20	10.00
		Blank marker			MG-CPM 13 41790	1SNB041790R0512		1960	0.236
		Universal wire markers holder		Grey	UMH	1SNK900611R0000		10	0.20

Complete list of accessories is indicated in the terminal block datasheet including end stops.
Some accessories such as jumper bars may modify the terminal block's ratings: Complete information available in the accessories section of the catalog.

Technical data valid for copper conductors only.

1SNK164026S0201

ZDK2.5-D2 PI-Spring pluggable terminal blocks

Double deck feed-through 2 circuits - 5.2 mm 0.205 in spacing

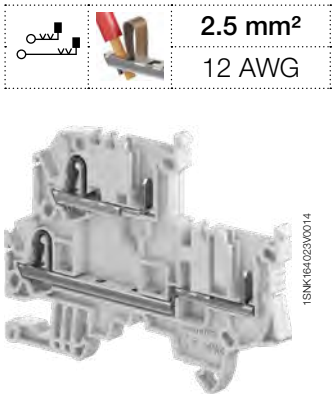

2.5 mm²
12 AWG

1SNK164023V0014

ZDK2.5-D2

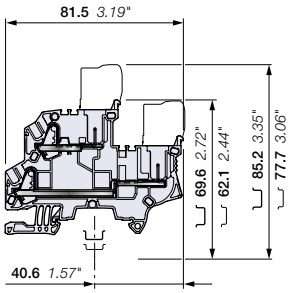

5.2 mm 0.205 in spacing

CDK2.5 CDK2.5-E CDK2.5-BL CDK2.5-BL-E

Description

- Increase your productivity with pluggable terminal blocks: possibility of pre-produced plugs harnesses, time saving plug and play assembly, reduced transportation panels preparation and final installation, easily connect sub-assemblies together,
- Simplify and secure your installation: in site faulty connection errors are eliminated, prior connection testing is eased and reliable, test connectors (TC5) withstanding 10 000 operations are compatible for convenient testing.

Ordering details

Description		Color	Type	Part Number		Pkg qty	Weight (1 pce) g
Feed-through	double deck 4 connections	Grey	ZDK2.5-D2	1SNK805213R0000		50	11.89
		Blue	ZDK2.5-D2-BL	1SNK805223R0000		50	11.89

Main technical data

Connecting capacity		IEC	UL - CSA
1 conductor per clamp	Rigid: Solid/Stranded	0.2 ... 4 mm²	26 ... 12 AWG
	Flexible without ferrule	0.22 ... 2.5 mm²	
	Flexible with non insulated ferrule	0.22 ... 2.5 mm²	26 ... 14 AWG
	Flexible with insulated ferrule	0.22 ... 2.5 mm²	26 ... 14 AWG
2 conductors per clamp	Flexible with twin ferrule	0.22 ... 0.5 mm²	26 ... 20 AWG
Rated current / Rated cross section		22 A / 2.5 mm²	20 A / 12 AWG
Rated short-time withstand current (1s)		300 A	
Rated voltage		800 V	600 V
Impulse withstand voltage		8000 V	
Protection		IP20	NEMA 1

Mounting instructions

Rail	TH 35-7.5, TH 35-15
Wire stripping length	11 mm 0.433 in
Tool (for flexible conductor without ferrule)	Flat screwdriver Ø 3.5 mm Ø 0.138 in

The connecting capacity data for one Rigid: Solid/Stranded, or one Flexible conductor (when applicable) is a mandatory information required by IEC, UL and CSA standards (Copper conductors). All other data are provided as supplementary information only. For more details, please consult our CB, UL or CSA certificates and technical datasheet available on http://www.TE.com

CE CB RoHS USR CNR CSA EAC BV

Female plugs

Description		Color	Type	Part Number		Pkg qty	Weight (1 pce) g
Female plugs	1 pole	Grey	CDK2.5	1SNK805712R0000		50	2.80
Female plugs without outer nubs - Closed	1 pole		CDK2.5-E	1SNK805713R0000		50	2.88
Female plugs	1 pole	Blue	CDK2.5-BL	1SNK805742R0000		50	2.80
Female plugs without outer nubs - Closed	1 pole		CDK2.5-BL-E	1SNK805743R0000		50	2.88

15 poles max.

Accessories

	Description			Color	Type	Part Number		Pkg qty	Weight (1 pce) g
1	**End stops**	5.2 mm	0.205 in	Dark grey	BAZ1	1SNK900002R0000		50	5.30
2	**End sections**	2.0 mm	0.079 in	Dark grey	EDK2.5-D	1SNK805913R0000		20	3.88
3	**Jumper bars**	2 poles	32 A (IEC)	Orange	JB5-2	1SNK905302R0000		50	1.30
		3 poles	32 A (IEC)		JB5-3	1SNK905303R0000		50	2.00
		4 poles	32 A (IEC)		JB5-4	1SNK905304R0000		50	2.70
		5 poles	32 A (IEC)		JB5-5	1SNK905305R0000		50	3.50
		10 poles	32 A (IEC)		JB5-10	1SNK905310R0000		30	7.10
		50 poles	32 A (IEC)		JB5-50	1SNK905350R0000		10	36.00
4	**Cross spacing jumpers**	3 poles	32 A (IEC)	Orange	JB85-3	1SNK900603R0000		10	2.80
5	**Test adapters**	For test plugs DIA 2 mm 0.079 in		Dark grey	TP2	1SNK900203R0000		20	1.70
		For test plugs DIA 4 mm 0.157 in			TP4	1SNK900205R0000		20	2.40
6	**Test connectors**	5.2 mm 0.205 in spacing		Dark grey	TC5	1SNK900200R0000		10	5.20
		End module, 5.2 mm 0.205 in			TC5-R1	1SNK900201R0000		10	5.20
7	**Coding pegs**			Dark grey	COP-ZD	1SNK900636R0000		10	3.57
8	**Terminal block markers**	Blank card		White	MC512	1SNK140000R0000		22	9.00
					MC512PA	1SNK149999R0000		20	10.00
		Blank marker			MG-CPM 13 41790	1SNB041790R0512		1960	0.236
		Universal wire markers holder		Grey	UMH	1SNK900611R0000		10	0.20

Complete list of accessories is indicated in the terminal block datasheet including end stops.
Some accessories such as jumper bars may modify the terminal block's ratings: Complete information available in the accessories section of the catalog.

Technical data valid for copper conductors only.

1SNK164029S0201

ZDK2.5-D1 PI-Spring pluggable terminal blocks

Double deck feed-through 1 circuit - 5.2 mm 0.205 in spacing

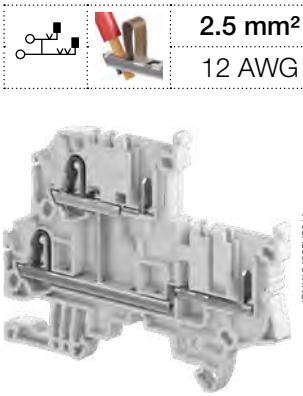

2.5 mm²
12 AWG

1SNK164025V0014

ZDK2.5-D1

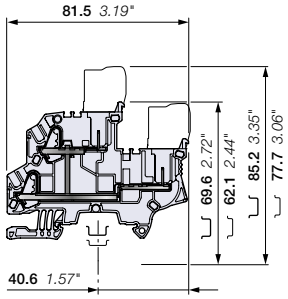

5.2 mm 0.205 in spacing

Description

- Increase your productivity with pluggable terminal blocks: possibility of pre-produced plugs harnesses, time saving plug and play assembly, reduced transportation panels preparation and final installation, easily connect sub-assemblies together,
- Simplify and secure your installation: in site faulty connection errors are eliminated, prior connection testing is eased and reliable, test connectors (TC5) withstanding 10 000 operations are compatible for convenient testing.

Ordering details

Description		Color	Type	Part Number		Pkg qty	Weight (1 pce) g
Feed-through	double deck 4 connections	Grey	ZDK2.5-D1	1SNK805214R0000		50	12.46

Main technical data

Connecting capacity		IEC	UL - CSA
1 conductor per clamp	Rigid: Solid/Stranded	0.2 ... 4 mm²	26 ... 12 AWG
	Flexible without ferrule	0.22 ... 2.5 mm²	
	Flexible with non insulated ferrule	0.22 ... 2.5 mm²	26 ... 14 AWG
	Flexible with insulated ferrule	0.22 ... 2.5 mm²	26 ... 14 AWG
2 conductors per clamp	Flexible with twin ferrule	0.22 ... 0.5 mm²	26 ... 20 AWG
Rated current / Rated cross section		22 A / 2.5 mm²	20 A / 12 AWG
Rated short-time withstand current (1s)		300 A	
Rated voltage		800 V	600 V
Impulse withstand voltage		8000 V	
Protection		IP20	NEMA 1

Mounting instructions

Rail		TH 35-7.5, TH 35-15
Wire stripping length		11 mm 0.433 in
Tool (for flexible conductor without ferrule)		Flat screwdriver Ø 3.5 mm Ø 0.138 in

The connecting capacity data for one Rigid: Solid/Stranded, or one Flexible conductor (when applicable) is a mandatory information required by IEC, UL and CSA standards (Copper conductors). All other data are provided as supplementary information only. For more details, please consult our CB, UL or CSA certificates and technical datasheet available on http://www.TE.com

CE CB RoHS USR CNR CSA EAC BV

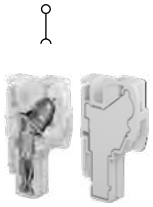

CDK2.5 CDK2.5-E

Female plugs

Description		Color	Type	Part Number		Pkg qty	Weight (1 pce) g
Female plugs	1 pole	Grey	CDK2.5	1SNK805712R0000		50	2.80
Female plugs without outer nubs - Closed	1 pole		CDK2.5-E	1SNK805713R0000		50	2.88

15 poles max.

Accessories

	Description			Color	Type	Part Number		Pkg qty	Weight (1 pce) g
1	**End stops**	5.2 mm	0.205 in	Dark grey	BAZ1	1SNK900002R0000		50	5.30
2	**End sections**	2.0 mm	0.079 in	Dark grey	EDK2.5-D	1SNK805913R0000		20	3.88
3	**Jumper bars**	2 poles	32 A (IEC)	Orange	JB5-2	1SNK905302R0000		50	1.30
		3 poles	32 A (IEC)		JB5-3	1SNK905303R0000		50	2.00
		4 poles	32 A (IEC)		JB5-4	1SNK905304R0000		50	2.70
		5 poles	32 A (IEC)		JB5-5	1SNK905305R0000		50	3.50
		10 poles	32 A (IEC)		JB5-10	1SNK905310R0000		30	7.10
		50 poles	32 A (IEC)		JB5-50	1SNK905350R0000		10	36.00
4	**Cross spacing jumpers**	3 poles	32 A (IEC)	Orange	JB85-3	1SNK900603R0000		10	2.80
5	**Test adapters**	For test plugs DIA 2 mm 0.079 in		Dark grey	TP2	1SNK900203R0000		20	1.70
		For test plugs DIA 4 mm 0.157 in			TP4	1SNK900205R0000		20	2.40
6	**Test connectors**	5.2 mm 0.205 in spacing		Dark grey	TC5	1SNK900200R0000		10	5.20
		End module, 5.2 mm 0.205 in			TC5-R1	1SNK900201R0000		10	5.20
7	**Coding pegs**			Dark grey	COP-ZD	1SNK900636R0000		10	3.57
8	**Terminal block markers**	Blank card		White	MC512	1SNK140000R0000		22	9.00
					MC512PA	1SNK149999R0000		20	10.00
		Blank marker			MG-CPM 13 41790	1SNB041790R0512		1960	0.236
		Universal wire markers holder		Grey	UMH	1SNK900611R0000		10	0.20

Complete list of accessories is indicated in the terminal block datasheet including end stops.
Some accessories such as jumper bars may modify the terminal block's ratings: Complete information available in the accessories section of the catalog.

Technical data valid for copper conductors only.

1SNK164027S0201

ZDK2.5-D2-PE PI-Spring pluggable terminal blocks

Double deck feed-through + ground - 5.2 mm 0.205 in spacing

2.5 mm²

12 AWG

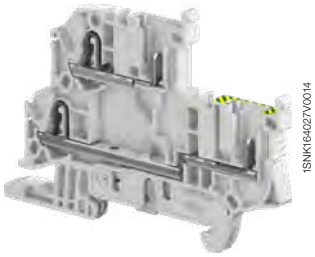

1SNK164027V0014

ZDK2.5-D2-PE

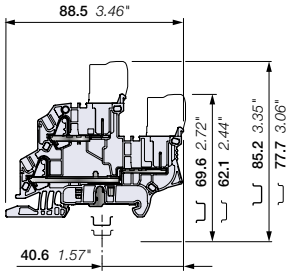

5.2 mm 0.205 in spacing

Description

- Increase your productivity with pluggable terminal blocks: possibility of pre-produced plugs harnesses, time saving plug and play assembly, reduced transportation panels preparation and final installation, easily connect sub-assemblies together,
- Simplify and secure your installation: in site faulty connection errors are eliminated, prior connection testing is eased and reliable, test connectors (TC5) withstanding 10 000 operations are compatible for convenient testing.

Ordering details

Description		Color	Type	Part Number		Pkg qty	Weight (1 pce) g
Feed-through + ground	double deck 4 connections	Grey, Green-yellow	ZDK2.5-D2-PE	1SNK805212R0000		50	16.13

Main technical data

Connecting capacity		IEC	UL - CSA
1 conductor per clamp	Rigid: Solid/Stranded	0.2 ... 4 mm²	26 ... 12 AWG
	Flexible without ferrule	0.22 ... 2.5 mm²	
	Flexible with non insulated ferrule	0.22 ... 2.5 mm²	26 ... 14 AWG
	Flexible with insulated ferrule	0.22 ... 2.5 mm²	26 ... 14 AWG
2 conductors per clamp	Flexible with twin ferrule	0.22 ... 0.5 mm²	26 ... 20 AWG
Rated current / Rated cross section		22 A / 2.5 mm²	20 A / 12 AWG
Rated short-time withstand current (1s)		300 A	396 A
Rated voltage		800 V	600 V
Impulse withstand voltage		8000 V	
Protection		IP20	NEMA 1

Mounting instructions

Rail		TH 35-7.5, TH 35-15
Wire stripping length		11 mm 0.433 in
Tool (for flexible conductor without ferrule)		Flat screwdriver Ø 3.5 mm Ø 0.138 in

The connecting capacity data for one Rigid: Solid/Stranded, or one Flexible conductor (when applicable) is a mandatory information required by IEC, UL and CSA standards (Copper conductors). All other data are provided as supplementary information only. For more details, please consult our CB, UL or CSA certificates and technical datasheet available on http://www.TE.com

CE CB RoHS USR CNR CSA EAC BV

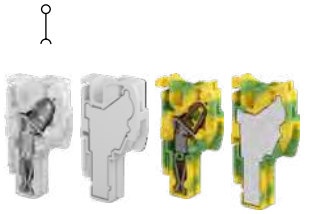

CDK2.5 CDK2.5-E CDK2.5-PE CDK2.5-PE-E

Female plugs

Description		Color	Type	Part Number		Pkg qty	Weight (1 pce) g
Female plugs	1 pole	Grey	CDK2.5	1SNK805712R0000		50	2.80
Female plugs without outer nubs - Closed	1 pole		CDK2.5-E	1SNK805713R0000		50	2.88
Female plugs	1 pole	Green-yellow	CDK2.5-PE	1SNK805750R0000		50	2.80
Female plugs without outer nubs - Closed	1 pole		CDK2.5-PE-E	1SNK805753R0000		50	2.88

15 poles max.

Accessories

	Description			Color	Type	Part Number		Pkg qty	Weight (1 pce) g
1	**End stops**	5.2 mm	0.205 in	Dark grey	BAZ1	1SNK900002R0000		50	5.30
2	**End sections**	2.0 mm	0.079 in	Dark grey	EDK2.5-D	1SNK805913R0000		20	3.88
3	**Jumper bars**	2 poles	32 A (IEC)	Orange	JB5-2	1SNK905302R0000		50	1.30
		3 poles	32 A (IEC)		JB5-3	1SNK905303R0000		50	2.00
		4 poles	32 A (IEC)		JB5-4	1SNK905304R0000		50	2.70
		5 poles	32 A (IEC)		JB5-5	1SNK905305R0000		50	3.50
		10 poles	32 A (IEC)		JB5-10	1SNK905310R0000		30	7.10
		50 poles	32 A (IEC)		JB5-50	1SNK905350R0000		10	36.00
4	**Cross spacing jumpers**	3 poles	32 A (IEC)	Orange	JB85-3	1SNK900603R0000		10	2.80
5	**Test adapters**	For test plugs DIA 2 mm 0.079 in		Dark grey	TP2	1SNK900203R0000		20	1.70
		For test plugs DIA 4 mm 0.157 in			TP4	1SNK900205R0000		20	2.40
6	**Test connectors**	5.2 mm 0.205 in spacing		Dark grey	TC5	1SNK900200R0000		10	5.20
		End module, 5.2 mm 0.205 in			TC5-R1	1SNK900201R0000		10	5.20
7	**Coding pegs**			Dark grey	COP-ZD	1SNK900636R0000		10	3.57
8	**Terminal block markers**	Blank card		White	MC512	1SNK140000R0000		22	9.00
					MC512PA	1SNK149999R0000		20	10.00
		Blank marker			MG-CPM 13 41790	1SNB041790R0512		1960	0.236
		Universal wire markers holder		Grey	UMH	1SNK900611R0000		10	0.20

Complete list of accessories is indicated in the terminal block datasheet including end stops.
Some accessories such as jumper bars may modify the terminal block's ratings: Complete information available in the accessories section of the catalog.

Technical data valid for copper conductors only.

1SNK164030S0201

4

ZDK2.5-D1-PE PI-Spring pluggable terminal blocks

Double deck ground - 5.2 mm 0.205 in spacing

2.5 mm²

12 AWG

1SNK164026V0014

ZDK2.5-D1-PE

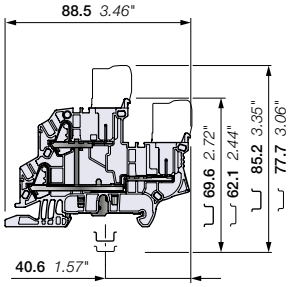

5.2 mm 0.205 in spacing

CDK2.5-PE CDK2.5-PE-E

Description

- Increase your productivity with pluggable terminal blocks: possibility of pre-produced plugs harnesses, time saving plug and play assembly, reduced transportation panels preparation and final installation, easily connect sub-assemblies together,
- Simplify and secure your installation: in site faulty connection errors are eliminated, prior connection testing is eased and reliable, test connectors (TC5) withstanding 10 000 operations are compatible for convenient testing.

Ordering details

Description		Color	Type	Part Number		Pkg qty	Weight (1 pce) g
Ground	double deck 4 connections	Green-yellow	ZDK2.5-D1-PE	1SNK805250R0000		50	16.80

Main technical data

Connecting capacity		IEC	UL - CSA
1 conductor per clamp	Rigid: Solid/Stranded	0.2 ... 4 mm²	26 ... 12 AWG
	Flexible without ferrule	0.22 ... 2.5 mm²	
	Flexible with non insulated ferrule	0.22 ... 2.5 mm²	26 ... 14 AWG
	Flexible with insulated ferrule	0.22 ... 2.5 mm²	26 ... 14 AWG
Rated cross section		2.5 mm²	12 AWG
Rated short-time withstand current (1s)		300 A	396 A
Protection		IP20	NEMA 1

Mounting instructions

Rail		TH 35-7.5, TH 35-15
Wire stripping length		11 mm 0.433 in
Tool (for flexible conductor without ferrule)		Flat screwdriver Ø 3.5 mm Ø 0.138 in

The connecting capacity data for one Rigid: Solid/Stranded, or one Flexible conductor (when applicable) is a mandatory information required by IEC, UL and CSA standards (Copper conductors). All other data are provided as supplementary information only. For more details, please consult our CB, UL or CSA certificates and technical datasheet available on http://www.TE.com

CE CB RoHS USR CNR CSA EAC BV

Female plugs

Description		Color	Type	Part Number		Pkg qty	Weight (1 pce) g
Female plugs	1 pole	Green-yellow	CDK2.5-PE	1SNK805750R0000		50	2.80
Female plugs without outer nubs - Closed	1 pole		CDK2.5-PE-E	1SNK805753R0000		50	2.88

15 poles max.

Accessories

	Description			Color	Type	Part Number		Pkg qty	Weight (1 pce) g
1	**End stops**	5.2 mm	0.205 in	Dark grey	BAZ1	1SNK900002R0000		50	5.30
2	**End sections**	2.0 mm	0.079 in	Dark grey	EDK2.5-D	1SNK805913R0000		20	3.88
3	**Test adapters**	For test plugs DIA 2 mm 0.079 in		Dark grey	TP2	1SNK900203R0000		20	1.70
		For test plugs DIA 4 mm 0.157 in			TP4	1SNK900205R0000		20	2.40
4	**Test connectors**	5.2 mm 0.205 in spacing		Dark grey	TC5	1SNK900200R0000		10	5.20
		End module, 5.2 mm 0.205 in			TC5-R1	1SNK900201R0000		10	5.20
5	**Coding pegs**			Dark grey	COP-ZD	1SNK900636R0000		10	3.57
6	**Terminal block markers**	Blank card		White	MC512	1SNK140000R0000		22	9.00
					MC512PA	1SNK149999R0000		20	10.00
		Universal wire markers holder		Grey	UMH	1SNK900611R0000		10	0.20

Complete list of accessories is indicated in the terminal block datasheet including end stops.
Some accessories such as jumper bars may modify the terminal block's ratings: Complete information available in the accessories section of the catalog.

Technical data valid for copper conductors only.

1SNK164028S0201

CDK2.5 PI-Spring female plugs

Female plug - 5.2 mm 0.205 in spacing

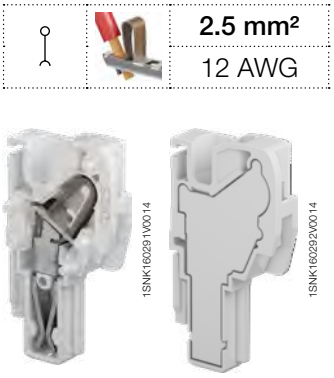

CDK2.5 CDK2.5-E

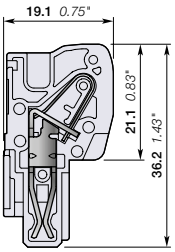

5.2 mm 0.205 in spacing

2.5 mm²	
12 AWG	

Description

- Create your own female plug assemblies without any special tools, easily snap together multiple plugs for optimal ergonomics and quick assembly,
- Increase your flexibility: eliminate stock of pre-configured female plugs, easily add an extra plug in case of needed modification,
- Reduce your stock of unitary plugs up to 30%: only two plug variants are required to compose your own subsets of plugs from 2 to 15 poles.

Ordering details

Description	Color	Type	Part number		Pkg qty	Weight (1 pce) g
Female plugs	Grey	CDK2.5	1SNK805712R0000		50	2.80
	Blue	CDK2.5-BL	1SNK805742R0000		50	2.80
	Green-Yellow	CDK2.5-PE	1SNK805750R0000		50	2.80
Female plugs without outer nubs - Closed	Grey	CDK2.5-E	1SNK805713R0000		50	2.80
	Blue	CDK2.5-BL-E	1SNK805743R0000		50	2.80
	Green-Yellow	CDK2.5-PE-E	1SNK805753R0000		50	2.80

Main technical data

Connecting capacity		IEC	UL - CSA
1 conductor per clamp	Rigid: Solid/Stranded	0.2 ... 4 mm²	26 ... 12 AWG
	Flexible without ferrule	0.22 ... 2.5 mm²	
	Flexible with non insulated ferrule	0.22 ... 2.5 mm²	26 ... 14 AWG
	Flexible with insulated ferrule	0.22 ... 2.5 mm²	26 ... 14 AWG
2 conductors per clamp	Flexible with twin ferrule	0.22 ... 0.5 mm²	26 ... 20 AWG
Rated current / Rated cross section		24 A / 2.5 mm²	22 A / 12 AWG
Rated short-time withstand current (1s)		300 A	
Rated voltage		1000 V	600 V
Impulse withstand voltage		8000 V	
Protection		IP20	NEMA 1

Mounting instructions

Rail		
Wire stripping length		11 mm 0.433 in
Tool (for flexible conductor without ferrule)		Flat screwdriver Ø 3.5 mm Ø 0.138 in

The connecting capacity data for one Rigid: Solid/Stranded, or one Flexible conductor (when applicable) is a mandatory information required by IEC, UL and CSA standards (Copper conductors). All other data are provided as supplementary information only. For more details, please consult our CB, UL or CSA certificates and technical datasheet available on http://www.TE.com

CE CB RoHS USR CNR CSA EAC BV

Mounting instructions

15 poles max.

Accessories

	Description		Color	Type	Part number		Pkg qty	Weight (1 pce) g
1	**Locking devices**	9.4 mm 0.370 in spacing	Black	VR-ZD	1SNK900637R0000		50	0.7
2	**Cable clamp**	9.4 mm 0.370 in spacing	Dark grey	PT-ZD	1SNK900660R0000		50	1.04
3	**Terminal block markers**	Blank marker	White	MG-CPM 13 41790	1SNB041790R0512		1960	0.23
		Blank strip label		MG-CPMFA 43196	1SNB043196R0012		350	2.56
		Blank card		MC512	1SNK140000R0000		22	9.00
				MC512PA	1SNK149999R0000		20	10.00
		Universal wire markers holder	Grey	UMH	1SNK900611R0000		10	0.20

Complete list of accessories is indicated in the terminal block datasheet including end stops.
Some accessories such as jumper bars may modify the terminal block's ratings: Complete information available in the accessories section of the catalog.

1SNK164005S0201

Technical data valid for copper conductors only.

CDK2.5-J PI-Spring female plugs

Female plug - 5.2 mm 0.205 in spacing

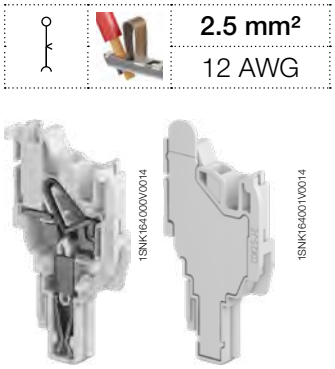

CDK2.5-J CDK2.5-J-E

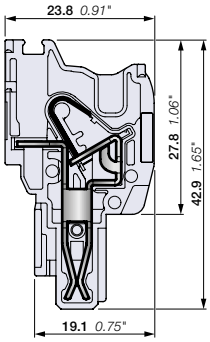

5.2 mm 0.205 in spacing

Description

- Create your own female plug assemblies without any special tools, easily snap together multiple plugs for optimal ergonomics and quick assembly,
- Increase your flexibility: eliminate stock of pre-configured female plugs, easily add an extra plug in case of needed modification,
- Reduce your stock of unitary plugs up to 30%: only two plug variants are required to compose your own subsets of plugs from 2 to 15 poles.

Description	Color	Type	Part Number	Pkg qty	Weight (1 pce) g
Female plugs	Grey	CDK2.5-J	1SNK805738R0000	50	4.08
	Blue	CDK2.5-J-BL	1SNK805744R0000	50	4.08
	Green-yellow	CDK2.5-J-PE	1SNK805748R0000	50	4.08
Female plugs without outer nubs - Closed	Grey	CDK2.5-J-E	1SNK805739R0000	50	4.34
	Blue	CDK2.5-J-BL-E	1SNK805745R0000	50	4.34
	Green-yellow	CDK2.5-J-PE-E	1SNK805749R0000	50	4.34

Main technical data

Connecting capacity		IEC	UL - CSA
1 conductor per clamp	Rigid: Solid/Stranded	0.2 ... 4 mm²	26 ... 12 AWG
	Flexible without ferrule	0.22 ... 2.5 mm²	
	Flexible with non insulated ferrule	0.22 ... 2.5 mm²	26 ... 14 AWG
	Flexible with insulated ferrule	0.22 ... 2.5 mm²	26 ... 14 AWG
2 conductors per clamp	Flexible with twin ferrule	0.22 ... 0.5 mm²	26 ... 20 AWG
Rated current / Rated cross section		24 A / 2.5 mm²	20 A / 12 AWG
Rated short-time withstand current (1s)		300 A	
Rated voltage		800 V	600 V
Impulse withstand voltage		8000 V	
Protection		IP20	NEMA 1

Mounting instructions

Rail		
Wire stripping length		11 mm 0.433 in
Tool (for flexible conductor without ferrule)		Flat screwdriver Ø 3.5 mm Ø 0.138 in

The connecting capacity data for one Rigid: Solid/Stranded, or one Flexible conductor (when applicable) is a mandatory information required by IEC, UL and CSA standards (Copper conductors). All other data are provided as supplementary information only. For more details, please consult our CB, UL or CSA certificates and technical datasheet available on http://www.TE.com

CE CB RoHS USR CNR CSA EAC BV

Mounting instructions

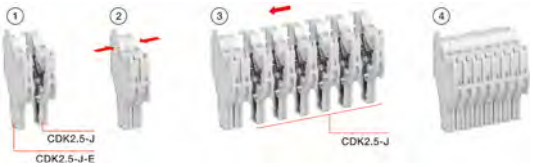

15 poles max.

Accessories

	Description			Color	Type	Part Number	Pkg qty	Weight (1 pce) g
1	**Jumper bars**	2 poles	32 A (IEC)	Orange	JB5-2	1SNK905302R0000	50	1.30
		3 poles	32 A (IEC)		JB5-3	1SNK905303R0000	50	2.00
		4 poles	32 A (IEC)		JB5-4	1SNK905304R0000	50	2.70
		5 poles	32 A (IEC)		JB5-5	1SNK905305R0000	50	3.50
		10 poles	32 A (IEC)		JB5-10	1SNK905310R0000	30	7.10
		50 poles	32 A (IEC)		JB5-50	1SNK905350R0000	10	36.00
2	**Test adapters**	For test plugs DIA 2 mm 0.079 in		Dark grey	TP2	1SNK900203R0000	20	1.70
		For test plugs DIA 4 mm 0.157 in			TP4	1SNK900205R0000	20	2.40
3	**Test connectors**	5.2 mm 0.205 in spacing		Dark grey	TC5	1SNK900200R0000	10	5.20
		End module, 5.2 mm 0.205 in			TC5-R1	1SNK900201R0000	10	5.20
4	**Locking devices**	9.4 mm 0.370 in spacing		Black	VR-ZD	1SNK900637R0000	50	0.7
5	**Strain Relief**			Dark grey	PT-ZD	1SNK900660R0000	50	1.04
6	**Terminal block markers**	Blank card		White	MC512	1SNK140000R0000	22	9.00
					MC512PA	1SNK149999R0000	20	10.00
		Blank strip label			MG-CPMFA 43196	1SNB043196R0012	400	2.562
		Blank marker			MG-CPM 13 41790	1SNB041790R0512	1960	0.236
		Universal wire markers holder		Grey	UMH	1SNK900611R0000	10	0.20

Complete list of accessories is indicated in the terminal block datasheet including end stops.
Some accessories such as jumper bars may modify the terminal block's ratings: Complete information available in the accessories section of the catalog.

Technical data valid for copper conductors only.

1SNK164031S0201

CDK2.5-2P-J PI-Spring female plugs

Female plug - 5.2 mm 0.205 in spacing

2.5 mm²

12 AWG

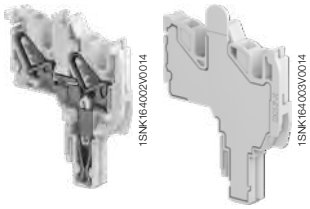

CDK2.5-2P-J **CDK2.5-2P-J-E**

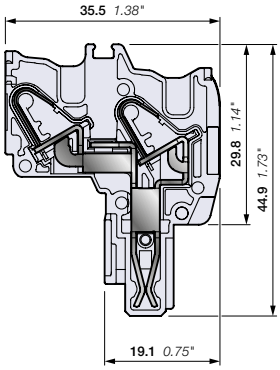

5.2 mm 0.205 in spacing

Description

- Create your own female plug assemblies without any special tools, easily snap together multiple plugs for optimal ergonomics and quick assembly,
- Increase your flexibility: eliminate stock of pre-configured female plugs, easily add an extra plug in case of needed modification,
- Reduce your stock of unitary plugs up to 30%: only two plug variants are required to compose your own subsets of plugs from 2 to 15 poles.

Description	Color	Type	Part Number	Pkg qty	Weight (1 pce) g
Female plugs	Grey	CDK2.5-2P-J	1SNK805740R0000	50	5.37
	Blue	CDK2.5-2P-J-BL	1SNK805746R0000	50	5.37
	Green-yellow	CDK2.5-2P-J-PE	1SNK805751R0000	50	5.37
Female plugs without outer nubs - Closed	Grey	CDK2.5-2P-J-E	1SNK805741R0000	50	5.74
	Blue	CDK2.5-2P-J-BL-E	1SNK805747R0000	50	5.74
	Green-yellow	CDK2.5-2P-J-PE-E	1SNK805752R0000	50	5.74

Main technical data

Connecting capacity		IEC	UL - CSA
1 conductor per clamp	Rigid: Solid/Stranded	0.2 ... 4 mm²	26 ... 12 AWG
	Flexible without ferrule	0.22 ... 2.5 mm²	
	Flexible with non insulated ferrule	0.22 ... 2.5 mm²	26 ... 14 AWG
	Flexible with insulated ferrule	0.22 ... 2.5 mm²	26 ... 14 AWG
2 conductors per clamp	Flexible with twin ferrule	0.22 ... 0.5 mm²	26 ... 20 AWG
Rated current / Rated cross section		24 A / 2.5 mm²	20 A / 12 AWG
Rated short-time withstand current (1s)		300 A	
Rated voltage		500 V	600 V
Impulse withstand voltage		6000 V	
Protection		IP20	NEMA 1

Mounting instructions

Rail		
Wire stripping length		11 mm 0.433 in
Tool (for flexible conductor without ferrule)		Flat screwdriver Ø 3.5 mm Ø 0.138 in

The connecting capacity data for one Rigid: Solid/Stranded, or one Flexible conductor (when applicable) is a mandatory information required by IEC, UL and CSA standards (Copper conductors). All other data are provided as supplementary information only. For more details, please consult our CB, UL or CSA certificates and technical datasheet available on http://www.TE.com

CE CB RoHS USR CNR CSA EAC BV

Mounting instructions

15 poles max.

Accessories

	Description			Color	Type	Part Number	Pkg qty	Weight (1 pce) g
1	**Jumper bars**	2 poles	32 A (IEC)	Orange	JB5-2	1SNK905302R0000	50	1.30
		3 poles	32 A (IEC)		JB5-3	1SNK905303R0000	50	2.00
		4 poles	32 A (IEC)		JB5-4	1SNK905304R0000	50	2.70
		5 poles	32 A (IEC)		JB5-5	1SNK905305R0000	50	3.50
		10 poles	32 A (IEC)		JB5-10	1SNK905310R0000	30	7.10
		50 poles	32 A (IEC)		JB5-50	1SNK905350R0000	10	36.00
2	**Test adapters**	For test plugs DIA 2 mm 0.079 in		Dark grey	TP2	1SNK900203R0000	20	1.70
		For test plugs DIA 4 mm 0.157 in			TP4	1SNK900205R0000	20	2.40
3	**Test connectors**	5.2 mm 0.205 in spacing		Dark grey	TC5	1SNK900200R0000	10	5.20
		End module, 5.2 mm 0.205 in			TC5-R1	1SNK900201R0000	10	5.20
4	**Locking devices**	9.4 mm 0.370 in spacing		Black	VR-ZD	1SNK900637R0000	50	0.7
5	**Strain Relief**			Dark grey	PT-ZD	1SNK900660R0000	50	1.04
6	**Terminal block markers**	Blank card		White	MC512	1SNK140000R0000	22	9.00
					MC512PA	1SNK149999R0000	20	10.00
		Blank strip label			MG-CPMFA 43196	1SNB043196R0012	400	2.562
		Blank marker			MG-CPM 13 41790	1SNB041790R0512	1960	0.236
		Universal wire markers holder		Grey	UMH	1SNK900611R0000	10	0.20

Complete list of accessories is indicated in the terminal block datasheet including end stops.
Some accessories such as jumper bars may modify the terminal block's ratings: Complete information available in the accessories section of the catalog.

Technical data valid for copper conductors only.

1SNK164032S0201

CDK4 PI-Spring female plugs

Female plug - 6 mm 0.236 in spacing

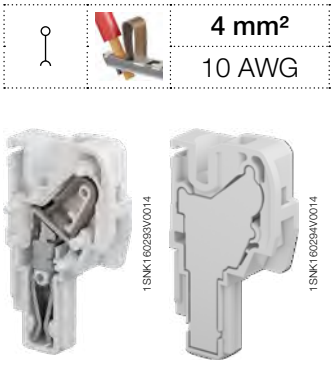

CDK4 CDK4-E

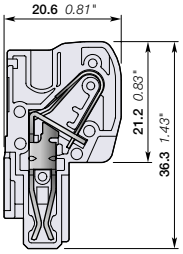

6 mm 0.236 in spacing

	4 mm²
	10 AWG

Description

- Create your own female plug assemblies without any special tools, easily snap together multiple plugs for optimal ergonomics and quick assembly,
- Increase your flexibility: eliminate stock of pre-configured female plugs, easily add an extra plug in case of needed modification,
- Reduce your stock of unitary plugs up to 30%: only two plug variants are required to compose your own subsets of plugs from 2 to 15 poles.

Ordering details

Description	Color	Type	Part Number		Pkg qty	Weight (1 pce) g
Female plugs	Grey	CDK4	1SNK806712R0000		50	3.80
Female plugs without outer nubs - Closed		CDK4-E	1SNK806713R0000		50	4.50

Main technical data

Connecting capacity		IEC	UL - CSA
1 conductor per clamp	Rigid: Solid/Stranded	0.5 ... 6 mm²	26 ... 10 AWG
	Flexible without ferrule	0.5 ... 4 mm²	
	Flexible with non insulated ferrule	0.5 ... 4 mm²	26 ... 12 AWG
	Flexible with insulated ferrule	0.5 ... 4 mm²	26 ... 12 AWG
2 conductors per clamp	Flexible with twin ferrule	0.5 ... 1 mm²	26 ... 18 AWG
Rated current / Rated cross section		30 A / 4 mm²	30 A / 10 AWG
Rated short-time withstand current (1s)		480 A	
Rated voltage		1000 V	600 V
Impulse withstand voltage		8000 V	
Protection		IP20	NEMA 1

Mounting instructions

Rail		
Wire stripping length		12.5 mm 0.492 in
Tool (for flexible conductor without ferrule)		Flat screwdriver Ø 3.5 mm Ø 0.138 in

The connecting capacity data for one Rigid: Solid/Stranded, or one Flexible conductor (when applicable) is a mandatory information required by IEC, UL and CSA standards (Copper conductors). All other data are provided as supplementary information only. For more details, please consult our CB, UL or CSA certificates and technical datasheet available on http://www.TE.com

CE CB RoHS USR CNR CSA EAC BV

Mounting instructions

15 poles max.

Accessories

	Description		Color	Type	Part Number		Pkg qty	Weight (1 pce) g
1	Locking devices	9.4 mm 0.370 in spacing	Black	VR-ZD	1SNK900637R0000		50	0.7
2	Cable Clamp	9.4 mm 0.370 in spacing	Dark grey	PT-ZD	1SNK900660R0000		50	1.04
3	Terminal block markers	Blank marker	White	MG-CPM 13 41791	1SNB041791R0612		1680	0.27
		Blank strip label		MG-CPMFA 43196	1SNB043196R0012		350	2.56
		Blank card		MC612	1SNK150000R0000		22	10.00
				MC612PA	1SNK159999R0000		20	11.00
		Universal wire markers holder	Grey	UMH	1SNK900611R0000		10	0.20

Complete list of accessories is indicated in the terminal block datasheet including end stops.
Some accessories such as jumper bars may modify the terminal block's ratings: Complete information available in the accessories section of the catalog.

1SNK164006S0201

Technical data valid for copper conductors only.

Screw clamp Pluggable

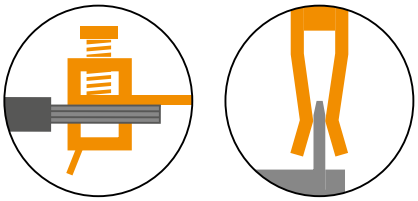

ZDS4-22 Screw clamp pluggable terminal blocks

Feed-through - 5.2 mm 0.205 in spacing

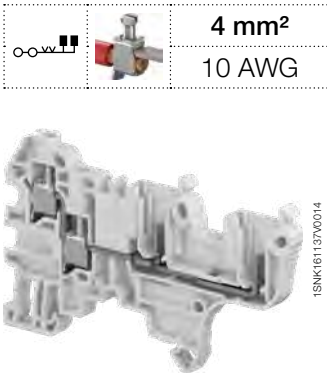

ZDS4-22

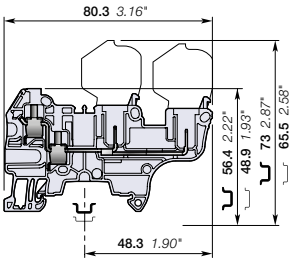

5.2 mm 0.205 in spacing

4 mm²
10 AWG

Description

- Increase your productivity with pluggable terminal blocks: possibility of pre-produced plugs harnesses, time saving plug and play assembly, reduced transportation panels preparation and final installation, easily connect sub-assemblies together,
- Simplify and secure your installation: in site faulty connection errors are eliminated, prior connection testing is eased and reliable, test connectors (TC5) withstanding 10 000 operations are compatible for convenient testing.

Ordering details

Description		Color	Type	Part Number		Pkg qty	Weight (1 pce) g
Feed-through	4 connections	Grey	ZDS4-22	1SNK805013R0000		50	10.80

Main technical data

Connecting capacity		IEC	UL - CSA
1 conductor per clamp	Rigid: Solid/Stranded	0.2 ... 4 mm²	24 ... 10 AWG
	Flexible without ferrule	0.22 ... 4 mm²	
	Flexible with non insulated ferrule	0.22 ... 4 mm²	24 ... 10 AWG
	Flexible with insulated ferrule	0.22 ... 2.5 mm²	24 ... 12 AWG
	Gauge	A3-B3	
2 conductors per clamp	Rigid: Solid/Stranded	0.2 ... 1.5 mm²	24 ... 16 AWG
	Flexible without ferrule	0.22 ... 1.5 mm²	
	Flexible with twin ferrule	0.22 ... 1.5 mm²	24 ... 16 AWG
Rated current / Rated cross section		29 A / 4 mm²	28 A / 10 AWG
Rated short-time withstand current (1s)		480 A	
Rated voltage		800 V	300 V
Impulse withstand voltage		8000 V	
Protection		IP20	NEMA 1

Mounting instructions

Rail	TH 35-7.5, TH 35-15
Wire stripping length	10.5 mm 0.413 in
Tool	Flat screwdriver Ø 3.5 mm Ø 0.138 in
Torque	0.6 Nm ± 0.1 5.31 lb.in ± 0.885

The connecting capacity data for one Rigid: Solid/Stranded, or one Flexible conductor (when applicable) is a mandatory information required by IEC, UL and CSA standards (Copper conductors). All other data are provided as supplementary information only. For more details, please consult our CB, UL or CSA certificates and technical datasheet available on http://www.TE.com

CE, CB, RoHS, USR CNR, CSA, EAC, BV

CDS4 CDS4-E

Female plugs

Description		Color	Type	Part Number		Pkg qty	Weight (1 pce) g
Female plugs	1 pole	Grey	CDS4	1SNK805714R0000		50	3.90
Female plugs without outer nubs - Closed			CDS4-E	1SNK805715R0000		50	4.10

15 poles max.

Accessories

	Description			Color	Type	Part Number		Pkg qty	Weight (1 pce) g
1	**End stops**	10 mm	0.394 in	Dark grey	BAM4	1SNK900001R0000		50	14.00
2	**End sections**	0.8 mm	0.031 in	Dark grey	EDS4-22	1SNK805911R0000		20	1.85
3	**Jumper bars**	2 poles	32 A (IEC)	Orange	JB5-2	1SNK905302R0000		50	1.30
		3 poles	32 A (IEC)		JB5-3	1SNK905303R0000		50	2.00
		4 poles	32 A (IEC)		JB5-4	1SNK905304R0000		50	2.70
		5 poles	32 A (IEC)		JB5-5	1SNK905305R0000		50	3.50
		10 poles	32 A (IEC)		JB5-10	1SNK905310R0000		30	7.10
		50 poles	32 A (IEC)		JB5-50	1SNK905350R0000		10	36.00
4	**Circuit separators**	3 mm	0.118 in	Dark grey	CS-R3	1SNK900107R0000		20	6.40
5	**Test adapters**	For test plugs DIA 2 mm 0.079 in		Dark grey	TP2	1SNK900203R0000		20	1.70
		For test plugs DIA 4 mm 0.157 in			TP4	1SNK900205R0000		20	2.40
6	**Test connectors**	5.2 mm 0.205 in spacing		Dark grey	TC5	1SNK900200R0000		10	5.20
		End module, 5.2 mm 0.205 in			TC5-R1	1SNK900201R0000		10	5.20
7	**Coding pegs**			Dark grey	COP-ZD	1SNK900636R0000		10	3.57
8	**Terminal block markers**	Blank marker		White	MG-CPM 13 41790	1SNB041790R0512		1960	0.23
		Blank card			MC512	1SNK140000R0000		22	9.00
					MC512PA	1SNK149999R0000		20	10.00
		Universal wire markers holder		Grey	UMH	1SNK900611R0000		10	0.20

Complete list of accessories is indicated in the terminal block datasheet including end stops.
Some accessories such as jumper bars may modify the terminal block's ratings: Complete information available in the accessories section of the catalog.

Technical data valid for copper conductors only.

CDS4 Screw clamp female plugs

Female plug - 5.2 mm 0.205 in spacing

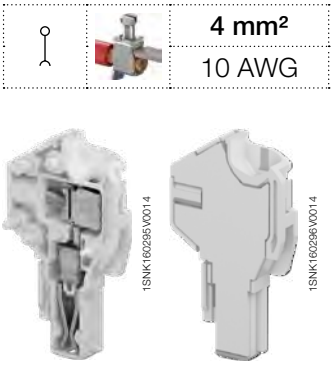

CDS4 CDS4-E

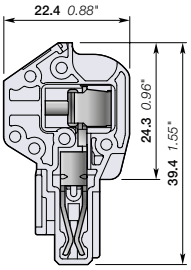

5.2 mm 0.205 in spacing

		4 mm²
		10 AWG

Description

- Create your own female plug assemblies without any special tools, easily snap together multiple plugs for optimal ergonomics and quick assembly,
- Increase your flexibility: eliminate stock of pre-configured female plugs, easily add an extra plug in case of needed modification,
- Reduce your stock of unitary plugs up to 30%: only two plug variants are required to compose your own subsets of plugs from 2 to 15 poles.

Ordering details

Description	Color	Type	Part Number		Pkg qty	Weight (1 pce) g
Female plugs	Grey	CDS4	1SNK805714R0000		50	3.90
Female plugs without outer nubs - Closed		CDS4-E	1SNK805715R0000		50	4.10

Main technical data

Connecting capacity		IEC	UL - CSA
1 conductor per clamp	Rigid: Solid/Stranded	0.2 ... 4 mm²	24 ... 10 AWG
	Flexible without ferrule	0.22 ... 4 mm²	
	Flexible with non insulated ferrule	0.22 ... 4 mm²	24 ... 10 AWG
	Flexible with insulated ferrule	0.22 ... 2.5 mm²	24 ... 12 AWG
	Gauge	A3-B3	
2 conductors per clamp	Rigid: Solid/Stranded	0.2 ... 1.5 mm²	24 ... 16 AWG
	Flexible without ferrule	0.22 ... 1.5 mm²	
	Flexible with twin ferrule	0.22 ... 1.5 mm²	24 ... 16 AWG
Rated current / Rated cross section		29 A / 4 mm²	28 A / 10 AWG
Rated short-time withstand current (1s)		480 A	
Rated voltage		800 V	300 V
Impulse withstand voltage		8000 V	
Protection		IP20	NEMA 1

Mounting instructions

Rail		
Wire stripping length		10.5 mm 0.413 in
Tool		Flat screwdriver Ø 3.5 mm Ø 0.138 in
Torque		0.6 Nm ± 0.1 5.31 lb.in ± 0.885

The connecting capacity data for one Rigid: Solid/Stranded, or one Flexible conductor (when applicable) is a mandatory information required by IEC, UL and CSA standards (Copper conductors). All other data are provided as supplementary information only. For more details, please consult our CB, UL or CSA certificates and technical datasheet available on http://www.TE.com

CE CB RoHS USR CNR CSA EAC BV

Mounting instructions

15 poles max.

Accessories

	Description		Color	Type	Part Number		Pkg qty	Weight (1 pce) g
1	**Locking devices**	9.4 mm 0.370 in spacing	Black	VR-ZD	1SNK900637R0000		50	0.7
2	**Cable Clamp**	9.4 mm 0.370 in spacing	Dark grey	PT-ZD	1SNK900660R0000		50	1.04
3	**Terminal block markers**	Blank marker	White	MG-CPM 13 41790	1SNB041790R0512		1960	0.23
		Blank strip label		MG-CPMFA 43196	1SNB043196R0012		350	2.56
		Blank card		MC512	1SNK140000R0000		22	9.00
				MC512PA	1SNK149999R0000		20	10.00
		Universal wire markers holder	Grey	UMH	1SNK900611R0000		10	0.20

Complete list of accessories is indicated in the terminal block datasheet including end stops.
Some accessories such as jumper bars may modify the terminal block's ratings: Complete information available in the accessories section of the catalog.

1SNK164007S0201

Technical data valid for copper conductors only.

ZDS4-22-R1 Screw clamp pluggable terminal blocks

Feed-through - 6 mm 0.236 in spacing

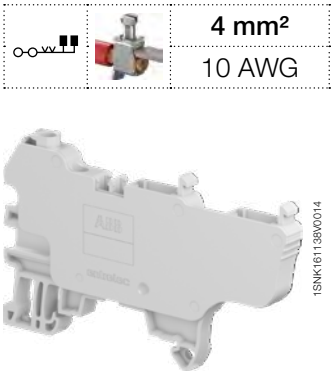

4 mm²
10 AWG

1SNK161138R0014

ZDS4-22-R1

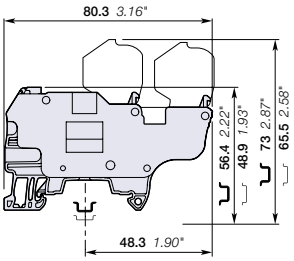

6 mm 0.236 in spacing

Description

- Increase your productivity with pluggable terminal blocks: possibility of pre-produced plugs harnesses, time saving plug and play assembly, reduced transportation panels preparation and final installation, easily connect sub-assemblies together,
- Simplify and secure your installation: in site faulty connection errors are eliminated, prior connection testing is eased and reliable, test connectors (TC5-R1 + ES-TC6) withstanding 10 000 operations are compatible for convenient testing.

Ordering details

Description		Color	Type	Part Number		Pkg qty	Weight (1 pce) g
Feed-through	4 connections	Grey	ZDS4-22-R1	1SNK806013R0000		40	12.60

Main technical data

Connecting capacity		IEC	UL - CSA
1 conductor per clamp	Rigid: Solid/Stranded	0.2 ... 4 mm²	24 ... 10 AWG
	Flexible without ferrule	0.22 ... 4 mm²	
	Flexible with non insulated ferrule	0.22 ... 4 mm²	24 ... 10 AWG
	Flexible with insulated ferrule	0.22 ... 4 mm²	24 ... 10 AWG
	Gauge	A3-B3	
2 conductors per clamp	Rigid: Solid/Stranded	0.2 ... 1.5 mm²	24 ... 16 AWG
	Flexible without ferrule	0.22 ... 1.5 mm²	
	Flexible with twin ferrule	0.22 ... 1.5 mm²	24 ... 16 AWG
Rated current / Rated cross section		29 A / 4 mm²	28 A / 10 AWG
Rated short-time withstand current (1s)		480 A	
Rated voltage		800 V	300 V
Impulse withstand voltage		8000 V	
Protection		IP20	NEMA 1

Mounting instructions

Rail	TH 35-7.5, TH 35-15
Wire stripping length	10.5 mm 0.413 in
Tool	Flat screwdriver Ø 3.5 mm Ø 0.138 in
Torque	0.6 Nm ± 0.1 5.31 lb.in ± 0.885

The connecting capacity data for one Rigid: Solid/Stranded, or one Flexible conductor (when applicable) is a mandatory information required by IEC, UL and CSA standards (Copper conductors). All other data are provided as supplementary information only. For more details, please consult our CB, UL or CSA certificates and technical datasheet available on http://www.TE.com

CE | CB | RoHS | USR CNR | CSA | EAC | BV

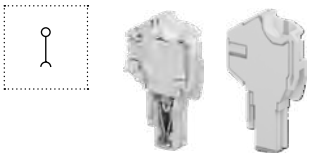

CDS4-R1 CDS4-E

Female plugs

Description		Color	Type	Part Number		Pkg qty	Weight (1 pce) g
Female plugs	1 pole	Grey	CDS4-R1	1SNK806714R0000		50	4.10
Female plugs without outer nubs - Closed			CDS4-E	1SNK805715R0000		50	4.10

15 poles max.

Accessories

	Description			Color	Type	Part Number		Pkg qty	Weight (1 pce) g
1	**End stops**	10 mm	0.394 in	Dark grey	BAM4	1SNK900001R0000		50	14.00
2	**Jumper bars**	2 poles	41 A (IEC)	Orange	JB6-2	1SNK906302R0000		50	1.30
		3 poles	41 A (IEC)		JB6-3	1SNK906303R0000		50	2.10
		4 poles	41 A (IEC)		JB6-4	1SNK906304R0000		50	2.90
		5 poles	41 A (IEC)		JB6-5	1SNK906305R0000		50	3.60
		10 poles	41 A (IEC)		JB6-10	1SNK906310R0000		20	7.40
		50 poles	41 A (IEC)		JB6-50	1SNK906350R0000		10	38.10
3	**Circuit separators**	3 mm	0.118 in	Dark grey	CS-R3	1SNK900107R0000		20	6.40
4	**Test adapters**	For test plugs DIA 2 mm 0.079 in		Dark grey	TP2	1SNK900203R0000		20	1.70
		For test plugs DIA 4 mm 0.157 in			TP4	1SNK900205R0000		20	2.40
5	**Test connectors**	End module, 5.2 mm 0.205 in		Dark grey	TC5-R1	1SNK900201R0000		10	5.20
6	**Spacers**	0.8 mm	0.031 in	Dark grey	ES-TC6	1SNK900105R0000		10	0.80
7	**Coding pegs**			Dark grey	COP-ZD	1SNK900636R0000		10	3.57
8	**Terminal block markers**	Blank marker		White	MG-CPM 13 41791	1SNB041791R0612		1680	0.27
		Blank card			MC612	1SNK150000R0000		22	10.00
					MC612PA	1SNK159999R0000		20	11.00
		Universal wire markers holder		Grey	UMH	1SNK900611R0000		10	0.20

Complete list of accessories is indicated in the terminal block datasheet including end stops.
Some accessories such as jumper bars may modify the terminal block's ratings: Complete information available in the accessories section of the catalog.

1SNK164004S0201

Technical data valid for copper conductors only.

CDS4-R1 Screw clamp female plugs

Female plug - 6 mm 0.236 in spacing

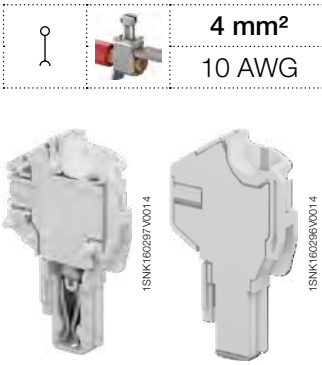

CDS4-R1 CDS4-E

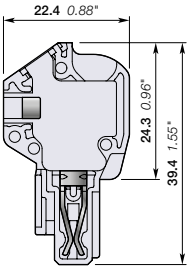

6 mm 0.236 in spacing

		4 mm²
		10 AWG

Description

- Create your own female plug assemblies without any special tools, easily snap together multiple plugs for optimal ergonomics and quick assembly,
- Increase your flexibility: eliminate stock of pre-configured female plugs, easily add an extra plug in case of needed modification,
- Reduce your stock of unitary plugs up to 30%: only two plug variants are required to compose your own subsets of plugs from 2 to 15 poles.

Ordering details

Description	Color	Type	Part Number		Pkg qty	Weight (1 pce) g
Female plugs	Grey	CDS4-R1	1SNK806714R0000		50	4.10
Female plugs without outer nubs - Closed		CDS4-E	1SNK805715R0000		50	4.10

Main technical data

Connecting capacity		IEC	UL - CSA
1 conductor per clamp	Rigid: Solid/Stranded	0.2 ... 4 mm²	24 ... 10 AWG
	Flexible without ferrule	0.22 ... 4 mm²	
	Flexible with non insulated ferrule	0.22 ... 4 mm²	24 ... 10 AWG
	Flexible with insulated ferrule	0.22 ... 4 mm²	24 ... 10 AWG
	Gauge	A3-B3	
2 conductors per clamp	Rigid: Solid/Stranded	0.2 ... 1.5 mm²	24 ... 16 AWG
	Flexible without ferrule	0.22 ... 1.5 mm²	
	Flexible with twin ferrule	0.22 ... 1.5 mm²	24 ... 16 AWG
Rated current / Rated cross section		29 A / 4 mm²	28 A / 10 AWG
Rated short-time withstand current (1s)		480 A	
Rated voltage		800 V	300 V
Impulse withstand voltage		8000 V	
Protection		IP20	NEMA 1

Mounting instructions

Rail		
Wire stripping length		10.5 mm 0.413 in
Tool		Flat screwdriver Ø 3.5 mm Ø 0.138 in
Torque		0.6 Nm ± 0.1 5.31 lb.in ± 0.885

The connecting capacity data for one Rigid: Solid/Stranded, or one Flexible conductor (when applicable) is a mandatory information required by IEC, UL and CSA standards (Copper conductors). All other data are provided as supplementary information only. For more details, please consult our CB, UL or CSA certificates and technical datasheet available on http://www.TE.com

CE CB RoHS USR CNR CSA EAC BV

Mounting instructions

15 poles max.

Accessories

	Description		Color	Type	Part Number		Pkg qty	Weight (1 pce) g
1	**Locking devices**	9.4 mm 0.370 in spacing	Black	VR-ZD	1SNK900637R0000		50	0.7
2	**Cable Clamp**	9.4 mm 0.370 in spacing	Dark grey	PT-ZD	1SNK900660R0000		50	1.04
3	**Terminal block markers**	Blank marker	White	MG-CPM 13 41791	1SNB041791R0612		1680	0.27
		Blank strip label		MG-CPMFA 43196	1SNB043196R0012		350	2.56
		Blank card		MC612	1SNK150000R0000		22	10.00
				MC612PA	1SNK159999R0000		20	11.00
		Universal wire markers holder	Grey	UMH	1SNK900611R0000		10	0.20

Complete list of accessories is indicated in the terminal block datasheet including end stops.
Some accessories such as jumper bars may modify the terminal block's ratings: Complete information available in the accessories section of the catalog.

Technical data valid for copper conductors only.

1SNK164008S0201

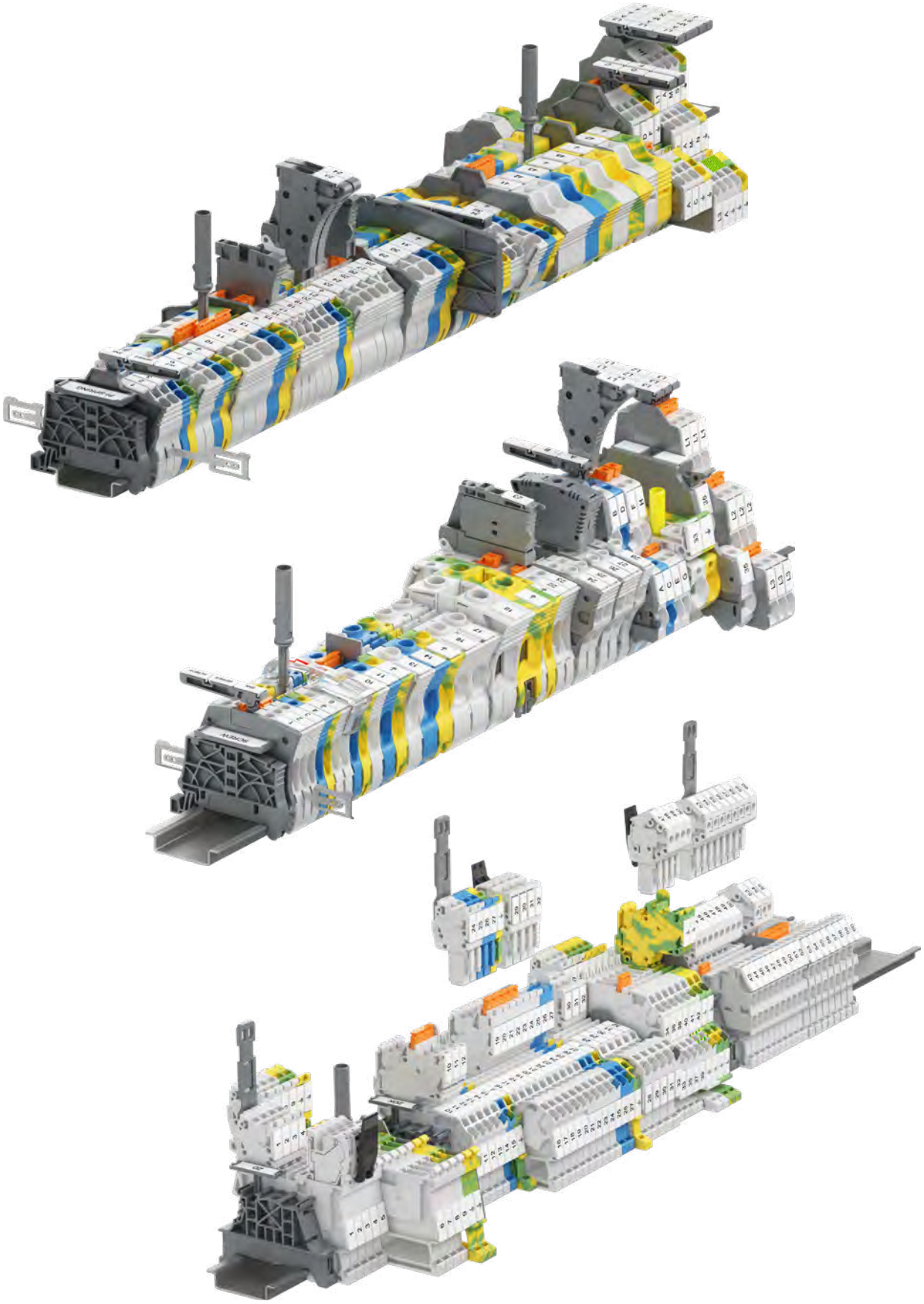

SNK series, terminal block accessories

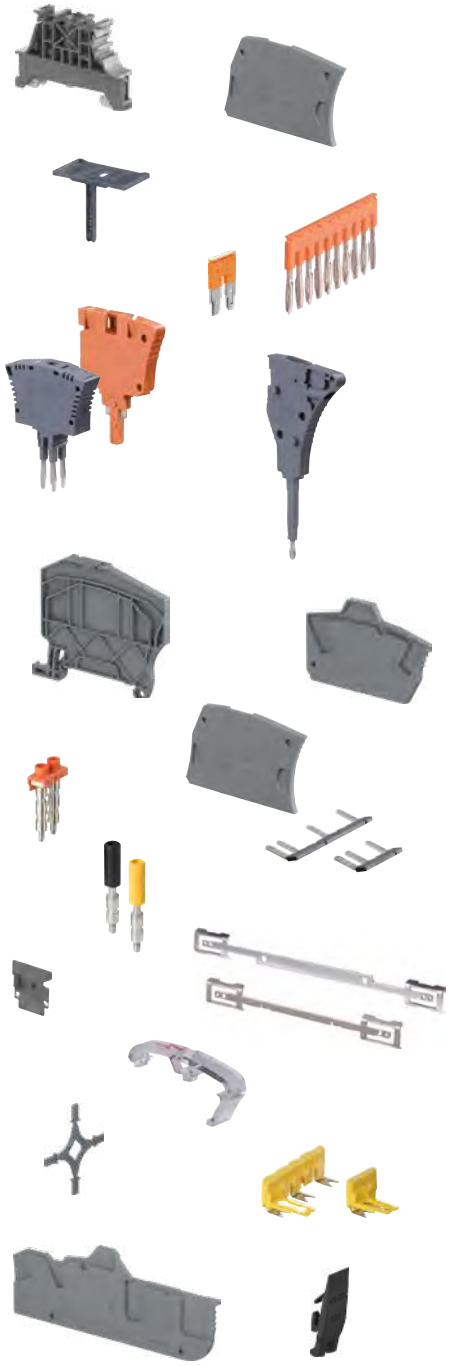

Common terminal block accessories

Mounting rail	**PR**	196-198
Screw end stops	**BAM4, BAZH1**	199
Screwless end stops	**BAZ1**	200
Label holders	**LH, LH-R1**	201
	LH-J	202
Screwless jumper bars	**JB5**	203
	JB6	204
	JB8	205
	JB10	206
	JB12	207
Cross spacing jumpers	**JB85-3**	208
Test adapters	**TP2, TP4**	209
Test connectors	**TC5**	210
Component plugs	**PG5-R2**	211
	PG5, PG5-R1	212
Screwdrivers	**TO**	213
Crimping tools	**PS**	213

PI-Spring terminal block accessories

End sections	**EK**	214-216
Circuit separators	**CS-R2, CS-R3**	217-218
Shield connectors	**SHBP, SHB**	219

Screw clamp terminal block accessories

End sections	**ES**	220-221
Screw jumper bars	**JB8**	222
	JB16, JB22	223
	JB26	224
	BJMI31, BJMI36	225
Lateral jumper bars	**PC8, PC81**	226
Circuit separator	**CS, CS-R1**	227
Shield connectors	**SHBS, SHB**	228
Protecting covers	**PL**	229
	CO, KCO	230
Short circuit bridges	**SC-JB8**	231
Test sockets	**AJS9**	232

Pluggable terminal block accessories

End sections	**EDK, EDS**	233-234
Coding pegs	**COP**	235
Locking devices	**VR**	235

1SNK500072F0000

PR30

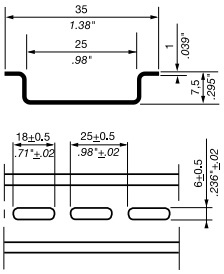

2000 mm 78.74 in spacing

Description

- Pre-punched symmetrical mounting rail,
- The slotted holes ease the mounting and allow to use existing and/or numerous fixings,
- Particularly well designed for fixing onto back-plates and for terminal assemblies of small dimensions.

Ordering details

Description	Color	Type	Part Number		Pkg meter	Weight (1 pce) g
Prepunched rail		PR30	1SNA173220R0500		2	328.00

Please note that for all rails: 1 part number equal 1 meter (39 in). Packing of 2 meters (78 in) minimum.
Check that your order quantity is a multiple of 2.

Main technical data

Material	Zinc plating and passivation steel	
Rail	TH 35-7.5	
	IEC	UL - CSA
Equivalent E-Cu cross section		

All the main technical data provided are "manufacturer" values.

RoHS
RoHS

Mounting instructions

- In order to guarantee the performances and security of your installation, please ensure the rail and its fixings can withstand the static and dynamic loads of the components mounted on it;
- To prevent the rail from flexing (1 mm 0.039 in rail thickness only), fixing is recommended every 250 mm 9.84 in;
- To prevent any issues during mounting, screw heads used for rail fixing should not protrude from the rail (7,5 mm 0.295 in rail height only).

1SNK500073F0000

PR3.Z2

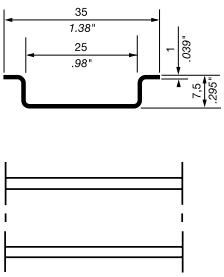

2000 mm 78.74 in spacing

Description

- Symmetrical mounting rail complying with IEC60715,
- Particularly well designed for fixing onto back-plates and for terminal assemblies of small dimensions.

Ordering details

Description	Color	Type	Part Number		Pkg meter	Weight (1 pce) g
		PR3.Z2	1SNA174300R1700		2	718.00

Please note that for all rails: 1 part number equal 1 meter (39 in). Packing of 2 meters (78 in) minimum.
Check that your order quantity is a multiple of 2.

Main technical data

Material	Zinc plating and passivation steel	
Rail	TH 35-7.5	
	IEC	UL - CSA
Equivalent E-Cu cross section	16 mm²	

All the main technical data provided are "manufacturer" values.

RoHS
RoHS

Mounting instructions

- In order to guarantee the performances and security of your installation, please ensure the rail and its fixings can withstand the static and dynamic loads of the components mounted on it;
- To prevent the rail from flexing (1 mm 0.039 in rail thickness only), fixing is recommended every 250 mm 9.84 in;
- To prevent any issues during mounting, screw heads used for rail fixing should not protrude from the rail (7,5 mm 0.295 in rail height only).

1SNK160017S0201

Technical data valid for copper conductors only.

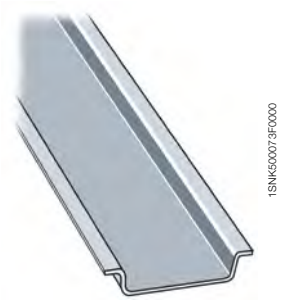

PR3.G2

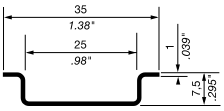

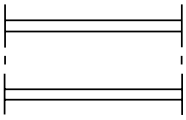

2000 mm 78.74 in spacing

Description

- Symmetrical mounting rail made of galvanised steel, complying with IEC60715,
- Particularly well designed for fixing onto back-plates and for terminal assemblies of small dimensions.

Ordering details

Description	Color	Type	Part Number		Pkg meter	Weight (1 pce) g
		PR3.G2	1SNA164800R0300		2	718.00

Please note that for all rails: 1 part number equal 1 meter (39 in). Packing of 2 meters (78 in) minimum.
Check that your order quantity is a multiple of 2.

Main technical data

Material	Galvanised steel	
Rail	TH 35-7.5	
	IEC	UL - CSA
Equivalent E-Cu cross section	16 mm²	

All the main technical data provided are "manufacturer" values.

RoHS
RoHS

Mounting instructions

- In order to guarantee the performances and security of your installation, please ensure the rail and its fixings can withstand the static and dynamic loads of the components mounted on it;
- To prevent the rail from flexing (1 mm 0.039 in rail thickness only), fixing is recommended every 250 mm 9.84 in;
- To prevent any issues during mounting, screw heads used for rail fixing should not protrude from the rail (7,5 mm 0.295 in rail height only).

PR50

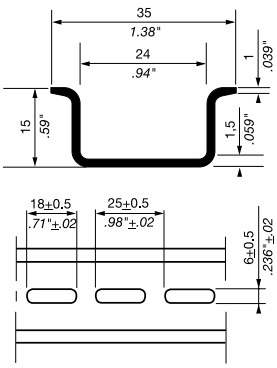

2000 mm 78.74 in spacing

Description

- Pre-punched symmetrical mounting rail,
- The slotted holes ease the mounting and allow to use existing and/or numerous fixings.

Ordering details

Description	Color	Type	Part Number		Pkg meter	Weight (1 pce) g
Preprunched rail		PR50	1SNA178529R0400		2	1288.00

Please note that for all rails: 1 part number equal 1 meter (39 in). Packing of 2 meters (78 in) minimum.
Check that your order quantity is a multiple of 2.

Main technical data

Material	Zinc plating and passivation steel	
Rail	TH 35-15	
	IEC	UL - CSA
Equivalent E-Cu cross section		

All the main technical data provided are "manufacturer" values.

RoHS
RoHS

Mounting instructions

- In order to guarantee the performances and security of your installation, please ensure the rail and its fixings can withstand the static and dynamic loads of the components mounted on it;
- To prevent the rail from flexing, fixing is recommended every 700 mm 27.6 in;
- In order to increase the accessibility of your terminal assembly, we recommend the use of our rail offset brackets EM45 (order code 1SNA008521R2600) for a 45° orientation of the rail.

1SNK160040S0201

Technical data valid for copper conductors only.

PR mounting rail
Common terminal block accessories

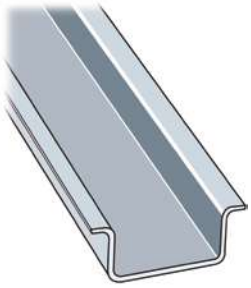

1SNK500075F0000

PR5

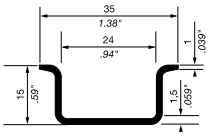

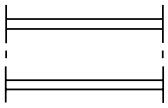

2000 mm 78.74 in spacing

Description

– Symmetrical mounting rail.

Ordering details

Description	Color	Type	Part Number		Pkg meter	Weight (1 pce) g
		PR5	1SNA168700R2200		2	1200.00

Please note that for all rails: 1 part number equal 1 meter (39 in). Packing of 2 meters (78 in) minimum.
Check that your order quantity is a multiple of 2.

Main technical data

Material	Zinc plating and passivation steel	
Rail	TH 35-15	
	IEC	UL - CSA
Equivalent E-Cu cross section		

All the main technical data provided are "manufacturer" values.

RoHS
RoHS

Mounting instructions

– In order to guarantee the performances and security of your installation, please ensure the rail and its fixings can withstand the static and dynamic loads of the components mounted on it;
– To prevent the rail from flexing, fixing is recommended every 700 mm 27.6 in;
– In order to increase the accessibility of your terminal assembly, we recommend the use of our rail offset brackets EM45 (order code 1SNA008521R2600) for a 45° orientation of the rail.

5

1SNK500076F0000

PR4

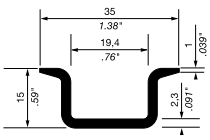

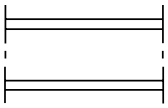

2000 mm 78.74 in spacing

Description

– Symmetrical mounting rail complying with IEC60715,
– The rigidity of the rail is maximised by the 2.3 mm 0.090 in thickness of the rail, and by its solid, non slotted construction,
– PR4 TH 35-15 is the most rigid mounting rail solution and it can suppo

Ordering details

Description	Color	Type	Part Number		Pkg meter	Weight (1 pce) g
Recommended for SNK ground terminal blocks up to 35 mm² 2 AWG		PR4	1SNA168500R1200		2	915.00

Please note that for all rails: 1 part number equal 1 meter (39 in). Packing of 2 meters (78 in) minimum.
Check that your order quantity is a multiple of 2.

Main technical data

Material	Zinc plating and passivation steel	
Rail	TH 35-15	
	IEC	UL - CSA
Equivalent E-Cu cross section	50 mm²	2 AWG

All the main technical data provided are "manufacturer" values.

RoHS
RoHS

Mounting instructions

– In order to guarantee the performances and security of your installation, please ensure the rail and its fixings can withstand the static and dynamic loads of the components mounted on it;
– To prevent the rail from flexing, fixing is recommended every 700 mm 27.6 in;
– In order to increase the accessibility of your terminal assembly, we recommend the use of our rail offset brackets EM45 (order code 1SNA008521R2600) for a 45° orientation of the rail.

1SNK160041S0201

Technical data valid for copper conductors only.

BAM4

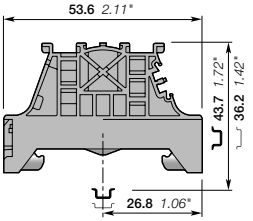

10 mm 0.394 in spacing

Mounting instructions

BAM4 screw end stops

Description

- Give efficient support to the SNK terminal blocks assemblies thanks to the BAM4 double gripping rail contact,
- Ease the assemblies identification with the BAM4 marking location compatible with all SNK markers and labels.

Ordering details

Description	Color	Type	Part Number		Pkg qty	Weight (1 pce) g
10 mm 0.394 in spacing	Dark grey	BAM4	1SNK900001R0000		50	14.00

Main technical data

Material specifications	Insulating material	Polyamide	
	Flammability	V0	
	NF F 16 101	I2F2	
Ambient temperature min/max	Service IEC 60068-2-1	-55 ... +110 °C	-67 ... +230 °F
	Storage	-55 ... +110 °C	-67 ... +230 °F
	Installing	-5 ... +40 °C	+23 ... +104 °F

Mounting instructions

Rail	TH 35-7.5, TH 35-15
Tool	Flat screwdriver Ø 5.5 mm Ø 0.217 in
Torque	0.9 Nm ± 0.1 7.08 lb.in ± 0.88

All the main technical data provided are "manufacturer" values

RoHS

Accessories

Description		Color	Type	Part Number		Pkg qty	Weight (1 pce) g
Terminal block markers	compatible with MG3	White	MG-CPM 13 41791	1SNB041791R0612		1680	0.27
Blank card	In polycarbonate		MC812	1SNK160000R0000		22	10.00
	In polyamide		MC812PA	1SNK169999R0000		20	14.00
Label holder	10 mm 0.394 in width	Dark grey	LH	1SNK900605R0000		50	0.60
	19.5 mm 0.768 in width		LH-R1	1SNK900607R0000		50	1.10
Universal wire markers holder	5.2 mm 0.205 in spacing	Grey	UMH	1SNK900611R0000		10	0.20

BAZH1

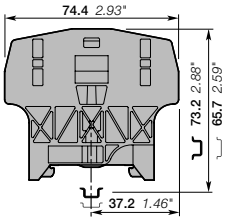

10 mm 0.394 in spacing

BAZH1 screw end stops

Description

- Give efficient support to the SNK double deck or power terminal blocks assemblies thanks to the BAZH1 double gripping rail contact,
- Ease the assemblies identification with label holders.

Ordering details

Description	Color	Type	Part Number		Pkg qty	Weight (1 pce) g
10 mm 0.394 in spacing	Dark grey	BAZH1	1SNK900102R0000		20	24.00

Main technical data

Material specifications	Insulating material	Polyamide	
	Flammability	V0	
	NF F 16 101	I2F2	
Ambient temperature min/max	Service IEC 60068-2-1	-55 ... +110 °C	-67 ... +230 °F
	Storage	-55 ... +110 °C	-67 ... +230 °F
	Installing	-5 ... +40 °C	+23 ... +104 °F

Mounting instructions

Rail	TH 35-7.5
Tool	Flat screwdriver Ø 5.5 mm Ø 0.217 in
Torque	1.3 Nm ± 0.1 11.4 lb.in ± 0.88

All the main technical data provided are "manufacturer" values

RoHS

Accessories

Description		Color	Type	Part Number		Pkg qty	Weight (1 pce) g
Terminal block markers	compatible with MG3	White	MG-CPM 13 41791	1SNB041791R0612		1680	0.27
Blank card	In polycarbonate		MC812	1SNK160000R0000		22	10.00
	In polyamide		MC812PA	1SNK169999R0000		20	14.00
Label holder	10 mm 0.394 in width	Dark grey	LH	1SNK900605R0000		50	0.60
	19.5 mm 0.768 in width		LH-R1	1SNK900607R0000		50	1.10
Universal wire markers holder	5.2 mm 0.205 in spacing	Grey	UMH	1SNK900611R0000		10	0.20

Technical data valid for copper conductors only.

1SNK160026S0201

BAZ1

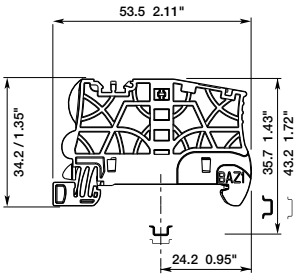

5.2 mm 0.205 in spacing

BAZ1 screwless end stops

Description

- Reduce the size of your terminal block assemblies with the screwless reduced spacing BAZ1 end stop,
- Ease the assemblies identification with various markers and label holders.

Ordering details

Description	Color	Type	Part Number		Pkg qty	Weight (1 pce) g
5.2 mm 0.205 in spacing	Dark grey	BAZ1	1SNK900002R0000		50	5.30

Main technical data

Material specifications	Insulating material	Polyamide	
	Flammability	V0	
	NF F 16 101	I2F2	
Ambient temperature min/max	Service IEC 60068-2-1	-55 ... +110 °C	-67 ... +230 °F
	Storage	-55 ... +110 °C	-67 ... +230 °F
	Installing	-5 ... +40 °C	+23 ... +104 °F

All the main technical data provided are "manufacturer" values

RoHS
RoHS

Mounting instructions

Rail		TH 35-7.5

Accessories

Description		Color	Type	Part Number		Pkg qty	Weight (1 pce) g
Terminal block markers	compatible with MG3	White	MG-CPM 13 41790	1SNB041790R0512		1960	0.23
Blank card	compatible with HTP500		MC512	1SNK140000R0000		22	9.00
	compatible with AMS600		MC512PA	1SNK149999R0000		20	10.00
Label holder	10 mm 0.394 in width	Dark grey	LH	1SNK900605R0000		50	0.60
	19.5 mm 0.768 in width		LH-R1	1SNK900607R0000		50	1.10
Universal wire markers holder	5.2 mm 0.205 in spacing	Grey	UMH	1SNK900611R0000		10	0.20

Technical data valid for copper conductors only.

1SNK160334V0014

LH

10 mm 0.394 in spacing

LH label holder

Description

- Easily identify your terminal blocks assembly with white or yellow labels,
- Adjustable in height for best visibility,
- Compatible with all SNK end stops.

Ordering details

Description	Color	Type	Part Number	Pkg qty	Weight (1 pce) g
10 mm 0.394 in width	Dark grey	LH	1SNK900605R0000	50	0.60

Main technical data

Material specifications	Insulating material	Polyamide	
	Flammability	V0	
	NF F 16 101	I2F2	
Ambient temperature min/max	Service IEC 60068-2-1	-55 ... +110 °C	-67 ... +230 °F
	Storage	-55 ... +110 °C	-67 ... +230 °F
	Installing	-5 ... +40 °C	+23 ... +104 °F

All the main technical data provided are "manufacturer" values

RoHS
RoHS

Accessories

Description		Color	Type	Part Number	Pkg qty	Weight (1 pce) g
Self-adhesive precut blank label	compatible with HTP500	White	MCLH	1SNK900630R0000	25	10.00
Self-adhesive precut blank label	compatible with HTP500	White	RCPEAD-TT	1SNA235158R0100	25	9.80
		Yellow	RCPEAD-TT-YL	1SNA235159R0200	25	12.10
Pre-printed cover marker	Protection for RCPEAD markers	Transparent	EPR2	1SNA399726R0700	10	4.00
Precut blank label	compatible with MG3	White	MG-TAR 45490	1SNB045490R8530	1650	0.371
Self-adhesive precut blank label	compatible with MG3	Yellow	MG-TAA 49448	1SNB049448R8530	825	0.55
		White	MG-TAA 49498	1SNB049498R8530	825	0.55
Self-adhesive precut blank label	compatible with HTP500	Yellow	MCLH-YL	1SNK900633R0000	25	10.00

5

1SNK160335V0014

LH

19.5 mm 0.768 in spacing

Mounting instructions

LH-R1 label holder

Description

- Easily identify your terminal blocks assembly with white or yellow labels,
- Adjustable in height for best visibility,
- Compatible with all SNK end stops.

Ordering details

Description	Color	Type	Part Number	Pkg qty	Weight (1 pce) g
19.5 mm 0.768 in width	Dark grey	LH-R1	1SNK900607R0000	50	1.10

Main technical data

Material specifications	Insulating material	Polyamide	
	Flammability	V0	
	NF F 16 101	I2F2	
Ambient temperature min/max	Service IEC 60068-2-1	-55 ... +110 °C	-67 ... +230 °F
	Storage	-55 ... +110 °C	-67 ... +230 °F
	Installing	-5 ... +40 °C	+23 ... +104 °F

All the main technical data provided are "manufacturer" values

RoHS
RoHS

Accessories

Description		Color	Type	Part Number	Pkg qty	Weight (1 pce) g
Self-adhesive precut blank label	compatible with HTP500	White	MCLH-R1	1SNK900631R0000	25	10.00
Precut blank label	compatible with AMS600	White	RCPEB	1SNA178430R0500	1	
	Protection for RCPEB markers	Transparent	EPR1	1SNA178431R2200	1	0.05
Self-adhesive precut blank label	compatible with HTP500	White	PIB2-TT	1SNA235155R2600	25	9.70
		Yellow	PIB2-TT-YL	1SNA235157R2000	25	9.40
Precut blank label	compatible with MG3	White	MG-TAR 45194	1SNB045194R1735	900	0.62
Self-adhesive precut blank label		Yellow	MG-TAA 49148	1SNB049148R1735	450	0.91
		White	MG-TAA 49198	1SNB049198R1735	450	0.91
Self-adhesive precut blank label	compatible with HTP500	Yellow	MCLH-R1-YL	1SNK900634R0000	25	10.00

1SNK160023S0201

Technical data valid for copper conductors only.

LH

4.8 mm 0.189 in spacing

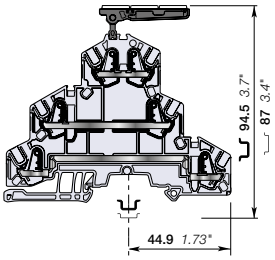

LH-J label holder

Description

Easily identify your block with three standard 5.2 mm 0.205 in spacing SNK markers. It fits in the jumper channel of the SNK terminal blocks.

Ordering details

Description	Color	Type	Part Number		Pkg qty	Weight (1 pce) g
Rotating label holder with three SNK markers housings - 4.8 mm 0.189 in spacing	Dark grey	LH-J	1SNK900606R0000		100	0.73

Main technical data

Material specifications	Insulating material	Polyamide	
	Flammability	V0	
	NF F 16 101	I2F2	
Ambient temperature min/max	Service IEC 60068-2-1	-55 ... +110 °C	-67 ... +230 °F
	Storage	-55 ... +110 °C	-67 ... +230 °F
	Installing	-5 ... +40 °C	+23 ... +104 °F

All the main technical data provided are "manufacturer" values

RoHS
RoHS

Accessories

Description		Color	Type	Part Number		Pkg qty	Weight (1 pce) g
Blank marker	compatible with MG3	White	MG-CPM 13 41790	1SNB041790R0512		1960	0.23
Blank card	compatible with HTP500	White	MC512	1SNK140000R0000		22	9.00
	compatible with AMS600	White	MC512PA	1SNK149999R0000		20	10.00
Universal wire markers holder	5.2 mm 0.205 in spacing	Grey	UMH	1SNK900611R0000		10	0.20

Technical data valid for copper conductors only.

1SNK160143F0014

JB5

5.2 mm 0.205 in spacing

Description

Facilitate & secure your jumper bar assembly process:
- Screwless mounting,
- Pre-cut poles for alternated jumpering between terminal blocks,
- Insulated,
- Positive locking,
- Perfectly adapted to low level electrical contact (20mA, 50mV).

Ordering details

Description		Color	Type	Part Number		Pkg qty	Weight (1 pce) g
5.2 mm 0.205 in spacing	2 poles	Orange	JB5-2	1SNK905302R0000		50	1.30
	3 poles		JB5-3	1SNK905303R0000		50	2.00
	4 poles		JB5-4	1SNK905304R0000		50	2.70
	5 poles		JB5-5	1SNK905305R0000		50	3.50
	10 poles		JB5-10	1SNK905310R0000		30	7.10
	50 poles		JB5-50	1SNK905350R0000		10	36.00

Main technical data

Material specifications	Insulating material	Polyamide				
	Flammability	V0				
	NF F 16 101	I2F3				
Ambient temperature min/max	Service IEC 60068-2-1	-55 ... +110 °C	-67 ... +230 °F			
	Storage	-55 ... +110 °C	-67 ... +230 °F			
	Installing	-5 ... +40 °C	+23 ... +104 °F			

		IEC	UL - CSA	Ex e
Rated current		32 A	30 A	
Rated voltage	1 - Standard use	1000 V	600 V	Please
	2 - Cut extremities	800 V	300 V	consult
	3 - Cut poles	630 V	300 V	us
	4 - Alternated poles	400 V	150 V	
	5 - Alternated poles with cut extremities	400 V	150 V	
Impulse withstand voltage		8000 V		
Protection		IP20	NEMA 1	

All the main technical data are indicative "manufacturer" values.

RoHS
RoHS

Mounting instructions

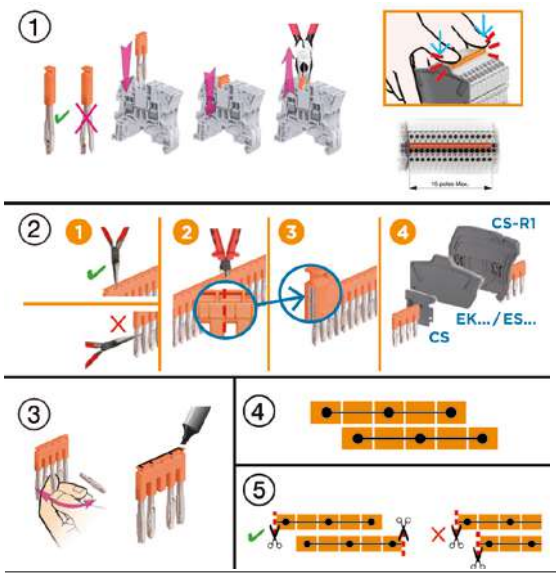

1 - Standard use

2 - Cut extremities

For voltage rating > 50 V and Uimp > 2.5 KV, the below accessories must be installed on the cut side of the jumper to guarantee IP20 and voltage rating:

ZS...	Feed-through	CS circuit separator
	Double deck / triple deck	ES... end section
ZK...	All functions	EK... end section

Ensure a good straight cut by positioning the cutting tool on the vertical snicks of the insulated part of the jumper.

15 poles max. recommended for convenient mounting.

3 - Cut poles

4 - Alternated poles

5 - Alternated poles with cut extremities

When using cut jumpers, cut extremities should be placed oppositely to allow end sections / circuit separators placement at each cut extremities.

For all other applications, please consult us.

1SNK160027S0201

Technical data valid for copper conductors only.

JB6 screwless jumper bars
Common terminal block accessories

JB6

6 mm 0.236 in spacing

Description

Facilitate & secure your jumper bar assembly process:
- Screwless mounting,
- Pre-cut poles for alternated jumpering between terminal blocks,
- Insulated,
- Positive locking,
- Perfectly adapted to low level electrical contact (20mA, 50mV).

Ordering details

Description		Color	Type	Part Number		Pkg qty	Weight (1 pce) g
6 mm 0.236 in spacing	2 poles	Orange	JB6-2	1SNK906302R0000		50	1.30
	3 poles		JB6-3	1SNK906303R0000		50	2.10
	4 poles		JB6-4	1SNK906304R0000		50	2.90
	5 poles		JB6-5	1SNK906305R0000		50	3.60
	10 poles		JB6-10	1SNK906310R0000		20	7.40
	50 poles		JB6-50	1SNK906350R0000		10	38.10

Main technical data

Material specifications	Insulating material	Polyamide	
	Flammability	V0	
	NF F 16 101	I2F3	
Ambient temperature min/max	Service IEC 60068-2-1	-55 ... +110 °C	-67 ... +230 °F
	Storage	-55 ... +110 °C	-67 ... +230 °F
	Installing	-5 ... +40 °C	+23 ... +104 °F

		IEC	UL - CSA	Ex e
Rated current		41 A	30 A	
Rated voltage	1 - Standard use	1000 V	600 V	Please consult
	2 - Cut extremities	800 V	300 V	our dedicated
	3 - Cut poles	630 V	300 V	certificates
	4 - Alternated poles	400 V	150 V	
	5 - Alternated poles with cut extremities	400 V	150 V	
Impulse withstand voltage		8000 V		
Protection		IP20	NEMA 1	

All the main technical data are indicative "manufacturer" values.

RoHS
RoHS

Mounting instructions

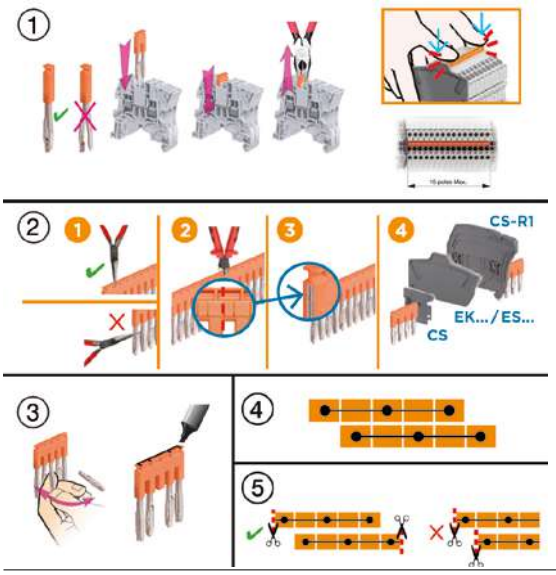

1 - Standard use

2 - Cut extremities

For voltage rating > 50 V and Uimp > 2.5 KV, the below accessories must be installed on the cut side of the jumper to guarantee IP20 and voltage rating:

ZS...	Feed-through	CS circuit separator
	Double deck / triple deck	ES... end section
ZK...	All functions	EK... end section

Ensure a good straight cut by positioning the cutting tool on the vertical snicks of the insulated part of the jumper.

15 poles max. recommended for convenient mounting.

3 - Cut poles

4 - Alternated poles

5 - Alternated poles with cut extremities

When using cut jumpers, cut extremities should be placed oppositely to allow end sections / circuit separators placement at each cut extremities.

For all other applications, please consult us.

1SNK160029S0201

Technical data valid for copper conductors only.

JB8 screwless jumper bars
Common terminal block accessories

JB8

8 mm 0.315 in spacing

Description

Facilitate & secure your jumper bar assembly process:
- Screwless mounting,
- Pre-cut poles for alternated jumpering between terminal blocks,
- Insulated,
- Positive locking,
- Perfectly adapted to low level electrical contact (20mA, 50mV).

Ordering details

Description		Color	Type	Part Number	Pkg qty	Weight (1 pce) g
8 mm 0.315 in spacing	2 poles	Orange	JB8-2	1SNK908302R0000	50	2.70
	3 poles		JB8-3	1SNK908303R0000	50	4.10
	4 poles		JB8-4	1SNK908304R0000	50	5.60
	5 poles		JB8-5	1SNK908305R0000	40	7.00
	10 poles		JB8-10	1SNK908310R0000	20	14.20

Main technical data

Material specifications	Insulating material	Polyamide	
	Flammability	V0	
	NF F 16 101	I2F3	
Ambient temperature min/max	Service IEC 60068-2-1	-55 ... +110 °C	-67 ... +230 °F
	Storage	-55 ... +110 °C	-67 ... +230 °F
	Installing	-5 ... +40 °C	+23 ... +104 °F

		IEC	UL - CSA	Ex e
Rated current		57 A	42 A	
Rated voltage	1 - Standard use	1000 V	600 V	693 V
	2 - Cut extremities	800 V	300 V	440 V
	3 - Cut poles	630 V	300 V	440 V
	4 - Alternated poles	630 V	150 V	352 V
	5 - Alternated poles with cut extremities	630 V	150 V	352 V
Impulse withstand voltage		6000 V		
Protection		IP20	NEMA 1	

All the main technical data are indicative "manufacturer" values.

RoHS
RoHS

Mounting instructions

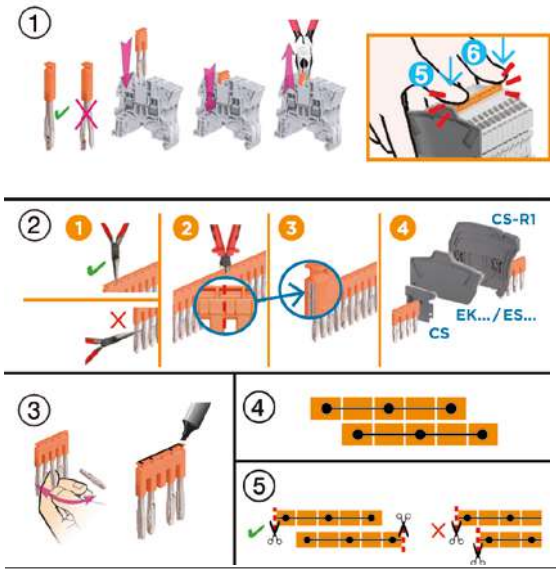

1 - Standard use

2 - Cut extremities

For voltage rating > 50 V and Uimp > 2.5 KV, the below accessories must be installed on the cut side of the jumper to guarantee IP20 and voltage rating:

ZS...	Feed-through	CS circuit separator
	Double deck / triple deck	ES... end section
ZK...	All functions	EK... end section

Ensure a good straight cut by positioning the cutting tool on the vertical snicks of the insulated part of the jumper.

3 - Cut poles

4 - Alternated poles

5 - Alternated poles with cut extremities

When using cut jumpers, cut extremities should be placed oppositely to allow end sections / circuit separators placement at each cut extremities.

For all other applications, please consult us.

1SNK160030S0201

Technical data valid for copper conductors only.

JB10 screwless jumper bars
Common terminal block accessories

JB10

10 mm 0.394 in spacing

Description

Facilitate & secure your jumper bar assembly process:
- Screwless mounting,
- Pre-cut poles for alternated jumpering between terminal blocks,
- Insulated,
- Positive locking,
- Perfectly adapted to low level electrical contact (20mA, 50mV).

Ordering details

Description		Color	Type	Part Number	Pkg qty	Weight (1 pce) g
10 mm 0.394 in spacing	2 poles	Orange	JB10-2	1SNK910302R0000	50	4.60
	3 poles		JB10-3	1SNK910303R0000	50	7.10
	4 poles		JB10-4	1SNK910304R0000	40	9.40
	5 poles		JB10-5	1SNK910305R0000	30	12.00
	10 poles		JB10-10	1SNK910310R0000	20	24.00

Main technical data

Material specifications	Insulating material	Polyamide	
	Flammability	V0	
	NF F 16 101	I2F3	
Ambient temperature min/max	Service IEC 60068-2-1	-55 ... +110 °C	-67 ... +230 °F
	Storage	-55 ... +110 °C	-67 ... +230 °F
	Installing	-5 ... +40 °C	+23 ... +104 °F

		IEC	UL - CSA	Ex e
Rated current		76 A	67 A	
Rated voltage	1 - Standard use	1000 V	600 V	693 V
	2 - Cut extremities	800 V	300 V	440 V
	3 - Cut poles	630 V	300 V	440 V
	4 - Alternated poles	400 V	150 V	275 V
	5 - Alternated poles with cut extremities	250 V	150 V	176 V
Impulse withstand voltage		6000 V		
Protection		IP20	NEMA 1	

All the main technical data are indicative "manufacturer" values.

RoHS
RoHS

Mounting instructions

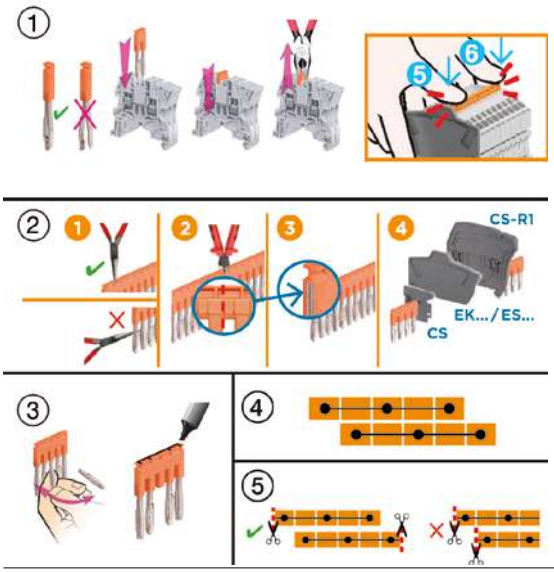

1 - Standard use

2 - Cut extremities

For voltage rating > 50 V and Uimp > 2.5 KV, the below accessories must be installed on the cut side of the jumper to guarantee IP20 and voltage rating:

ZS...	Feed-through	CS circuit separator
	Double deck / triple deck	ES... end section
ZK...	All functions	EK... end section

Ensure a good straight cut by positioning the cutting tool on the vertical snicks of the insulated part of the jumper.

3 - Cut poles

4 - Alternated poles

5 - Alternated poles with cut extremities

When using cut jumpers, cut extremities should be placed oppositely to allow end sections / circuit separators placement at each cut extremities.

For all other applications, please consult us.

1SNK160031S0201

Technical data valid for copper conductors only.

JB12 screwless jumper bars
Common terminal block accessories

JB12

12 mm 0.472 in spacing

Description

Facilitate & secure your jumper bar assembly process:
- Screwless mounting,
- Pre-cut poles for alternated jumpering between terminal blocks,
- Insulated,
- Positive locking,
- Perfectly adapted to low level electrical contact (20mA, 50mV).

Ordering details

Description		Color	Type	Part Number	Pkg qty	Weight (1 pce) g
12 mm 0.472 in spacing	2 poles	Orange	JB12-2	1SNK912302R0000	50	4.90
	3 poles		JB12-3	1SNK912303R0000	50	7.60
	5 poles		JB12-5	1SNK912305R0000	20	12.90

Main technical data

Material specifications	Insulating material	Polyamide	
	Flammability	V0	
	NF F 16 101	I2F2	
Ambient temperature min/max	Service IEC 60068-2-1	-55 ... +110 °C	-67 ... +230 °F
	Storage	-55 ... +110 °C	-67 ... +230 °F
	Installing	-5 ... +40 °C	+23 ... +104 °F

		IEC	UL - CSA	Ex e
Rated current		76 A	67 A	
Rated voltage	1 - Standard use	1000 V	600 V	693 V
	2 - Cut extremities	800 V	300 V	440 V
	3 - Cut poles	630 V	300 V	440 V
	4 - Alternated poles	320 V	150 V	220 V
	5 - Alternated poles with cut extremities	250 V	150 V	176 V
Impulse withstand voltage		6000 V		
Protection		IP20	NEMA 1	

All the main technical data are indicative "manufacturer" values.

RoHS
RoHS

Mounting instructions

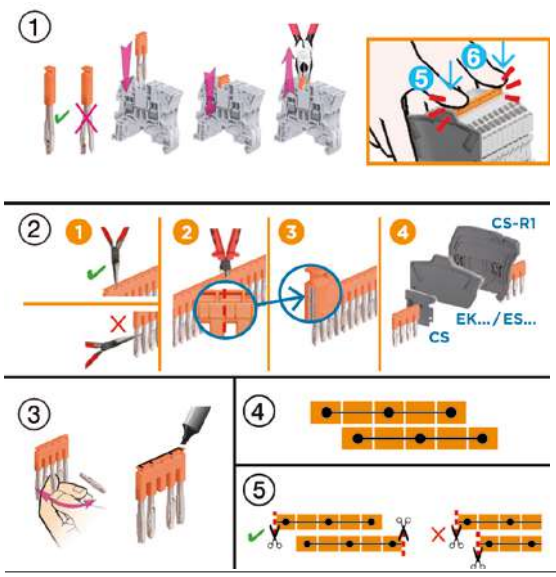

1 - Standard use

2 - Cut extremities

For voltage rating > 50 V and Uimp > 2.5 KV, the below accessories must be installed on the cut side of the jumper to guarantee IP20 and voltage rating:

ZS...	Feed-through	CS circuit separator
	Double deck / triple deck	ES... end section
ZK...	All functions	EK... end section

Ensure a good straight cut by positioning the cutting tool on the vertical snicks of the insulated part of the jumper.

3 - Cut poles

4 - Alternated poles

5 - Alternated poles with cut extremities

When using cut jumpers, cut extremities should be placed oppositely to allow end sections / circuit separators placement at each cut extremities.

For all other applications, please consult us.

1SNK160071S0201

Technical data valid for copper conductors only.

JB85-3 cross spacing jumpers
Common terminal block accessories

JB85

8 mm 0.315 in spacing

Description

- Allows power distribution between terminal blocks with different spacing,
- JB5-3, JB6-3 and JB8-3 can be used as cross spacing jumpers (see selection table on mounting instructions below).

Ordering details

Description		Color	Type	Part Number		Pkg qty	Weight (1 pce) g
Cross spacing jumpers	3 poles	Orange	JB85-3	1SNK900603R0000		10	2.80

Main technical data

Material specifications	Insulating material	Polyamide	
	Flammability	V0	
	NF F 16 101	I2F3	
Ambient temperature min/max	Service IEC 60068-2-1	-55 ... +110 °C	-67 ... +230 °F
	Storage	-55 ... +110 °C	-67 ... +230 °F
	Installing	-5 ... +40 °C	+23 ... +104 °F

		IEC	UL - CSA	Ex e
Rated current		32 A	30 A	
Rated voltage	Standard use	1000 V	600 V	Please consult
	Cut extremities	800 V	300 V	our dedicated
	Cut poles	630 V	300 V	certificates
Impulse withstand voltage		8000 V		
Protection		IP20	NEMA 1	

All the main technical data provided are "manufacturer" values

RoHS
RoHS

Mounting instructions

Cross spacing jumper selection between A and B terminal blocks with different spacing.

A \ B	5.2 mm	6 mm	8 mm
6 mm	JB5.3	-	-
8 mm	JB85.3	JB85.3	-
10 mm	JB85.3	JB85.3	JB8.3
12 mm	JB85.3	JB6.3	-

Yellow cell: for ZS and ZK terminal blocks

Blue cell: for ZS terminal blocks only

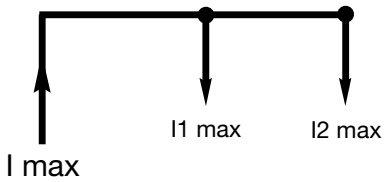

I1 max + I2 max ≤ I max

I max
I1 max ≤ I rated terminal block
I2 max

1SNK160054S0201

Technical data valid for copper conductors only.

TP

7.6 mm 0.299 in spacing

Mounting instructions

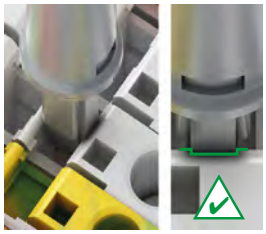

TP2 test adapters

Description

- Insulated test adapter that enables individual voltage control,
- Direct plug-in solution into the jumpers channels,
- Compatible with standard isolated or non isolated test plugs DIA 2 mm 0.079 in and 2.3 mm 0.090 in,
- Withstand more than 10000 operations according to TE Connectivity test standards.

Ordering details

Description	Color	Type	Part Number	Pkg qty	Weight (1 pce) g
For test plugs DIA 2 mm 0.079 in	Dark grey	TP2	1SNK900203R0000	20	1.70

Main technical data

Material specifications	Insulating material	Polyamide		
	Flammability	V0		
	NF F 16 101	I2F2		
Ambient temperature min/max	Service IEC 60068-2-1	-55 ... +110 °C	-67 ... +230 °F	
	Storage	-55 ... +110 °C	-67 ... +230 °F	
	Installing	-5 ... +40 °C	+23 ... +104 °F	
		IEC	**UL - CSA**	**Ex e**
Rated current		10 A		
Rated voltage	Standard use	1000 V	600 V	Not authorized
Impulse withstand voltage		8000 V		
Protection		IP20	NEMA 1	

All the main technical data provided are "manufacturer" values

RoHS
RoHS

TP

7.6 mm 0.299 in spacing

Mounting instructions

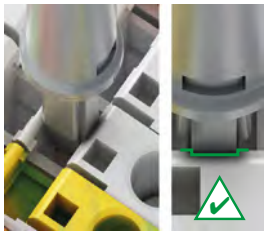

TP4 test adapters

Description

- Isolated test adapter that enables individual voltage control,
- Direct plug-in solution into the jumpers channels,
- Compatible with standard insulated or non isolated test plugs DIA 4 mm 0.157 in,
- Withstand more than 10000 operations according to TE Connectivity test standards.

Ordering details

Description	Color	Type	Part Number	Pkg qty	Weight (1 pce) g
For test plugs DIA 4 mm 0.157 in	Dark grey	TP4	1SNK900205R0000	20	2.40

Main technical data

Material specifications	Insulating material	Polyamide		
	Flammability	V0		
	NF F 16 101	I2F2		
Ambient temperature min/max	Service IEC 60068-2-1	-55 ... +110 °C	-67 ... +230 °F	
	Storage	-55 ... +110 °C	-67 ... +230 °F	
	Installing	-5 ... +40 °C	+23 ... +104 °F	
		IEC	**UL - CSA**	**Ex e**
Rated current		16 A		
Rated voltage	Standard use	1000 V	600 V	Not authorized
Impulse withstand voltage		8000 V		
Protection		IP20	NEMA 1	

All the main technical data provided are "manufacturer" values

RoHS
RoHS

1SNK160036S0201

Technical data valid for copper conductors only.

TC5 test connectors
Common terminal block accessories

5.2 mm 0.205 in spacing

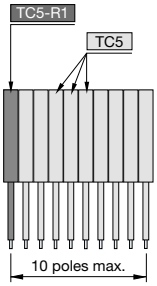

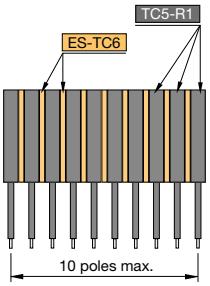

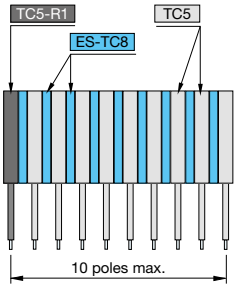

PT-3

Description

Ease the testing of terminal block assemblies:

- Make your own test connector assembly with our modular solution mixing various spacings,
- Direct plug-in solution into the jumpers channels,
- Withstand more than 10000 operations according to TE Connectivity test standards.

Main technical data

Connecting capacity		IEC	UL - CSA
1 conductor per clamp	Rigid: Solid/Stranded	0.2 ... 1.5 mm²	
	Flexible without ferrule	0.22 ... 1.5 mm²	
	Flexible with non insulated ferrule		
	Flexible with insulated ferrule	0.22 ... 1.5 mm²	
	Gauge	A1-B1	
2 conductors per clamp	Rigid: Solid/Stranded	0.2 ... 0.75 mm²	
	Flexible without ferrule	0.22 ... 0.75 mm²	
	Flexible with twin ferrule	0.22 ... 0.75 mm²	
Rated current / Rated cross section		16 A / 1.5 mm²	
Rated short-time withstand current (1s)		180 A	
Rated voltage		1000 V	
Impulse withstand voltage		8000 V	
Protection		IP20	NEMA 1

Mounting instructions

Rail		
Wire stripping length		8 mm 0.314 in
Tool		Flat screwdriver Ø 2.5 mm Ø 0.098 in
Torque		0.5 Nm ± 0.1 3.43 lb.in ± 0.885

The connecting capacity data for one Rigid: Solid/Stranded, or one Flexible conductor (when applicable) is a mandatory information required by IEC, UL and CSA standards (Copper conductors). All other data are provided as supplementary information only. For more details, please consult our CB, UL or CSA certificates and technical datasheet available on http://www.TE.com

Material specifications	Insulating material	Polyamide	
	Flammability	V0	
	NF F 16 101	I2F2	
Ambient temperature min/max	Service IEC 60068-2-1	-55 ... +110 °C	-67 ... +230 °F
	Storage	-55 ... +110 °C	-67 ... +230 °F
	Installing	-5 ... +40 °C	+23 ... +104 °F

All the main technical data provided are "manufacturer" values

RoHS
RoHS

Ordering details

Test connectors for 5.2 mm 0.205 in spacing terminal blocks

Description		Color	Type	Part Number		Pkg qty	Weight (1 pce) g
Test connectors	5.2 mm 0.205 in spacing	Dark grey	TC5	1SNK900200R0000		10	5.20
	End module, 5.2 mm 0.205 in		TC5-R1	1SNK900201R0000		10	5.20

Ordering details

Test connectors for 6 mm 0.236 in spacing terminal blocks

Description		Color	Type	Part Number		Pkg qty	Weight (1 pce) g
Test connectors	End module, 5.2 mm 0.205 in	Dark grey	TC5-R1	1SNK900201R0000		10	5.20
Spacers	0.8 mm 0.031 in spacing		ES-TC6	1SNK900105R0000		10	0.80

Ordering details

Test connectors for 8 mm 0.315 in spacing terminal blocks

Description		Color	Type	Part Number		Pkg qty	Weight (1 pce) g
Test connectors	5.2 mm 0.205 in spacing	Dark grey	TC5	1SNK900200R0000		10	5.20
	End module, 5.2 mm 0.205 in		TC5-R1	1SNK900201R0000		10	5.20
Spacers	2.8 mm 0.110 in spacing		ES-TC8	1SNK900104R0000		10	1.40

Accessories

Description		Color	Type	Part Number		Pkg qty	Weight (1 pce) g
Cable clamps	Fit on two C2.5-ZDP plugs and on TC5 test connectors	Dark grey	PT-3	1SNK900625R0000		20	1.00
Terminal block markers	Blank marker	White	MG-CPM 13 41790	1SNB041790R0512		1960	0.23
	Blank card		MC512	1SNK140000R0000		22	9.00
			MC512PA	1SNK149999R0000		20	10.00
	Universal wire markers holder	Grey	UMH	1SNK900611R0000		10	0.20

Technical data valid for copper conductors only.

1SNK160042S0201

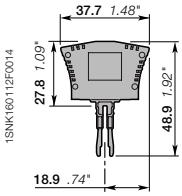

PG5

9.95 mm 0.392 in spacing

Mounting instructions

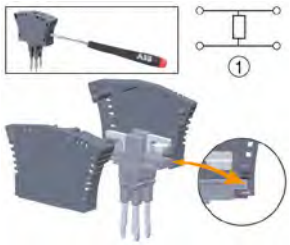

- Open the PG5-R2 with a flat screw-driver DIA . 3.5 mm 0.138 in,
- Use a soldering iron to fix your component,
- Close the PG5-R2,
- Plug-in in the terminal blocks jumper channels.

PG5-R2 component plugs

Description

- Component holder compatible with 5.2 mm 0.205 in spacing ZS4 feed-through terminal blocks,
- Fit components 16 x 16 x 8.5 mm 0.630 x 0.630 x 0.335 in (not supplied with plug) such as resistors, diodes, varistance,
- Direct plug-in into the terminal blocks jumper channels,
- Maximum dissipatived power: 2 W.

Ordering details

Description	Color	Type	Part Number	Pkg qty	Weight (1 pce) g
Components insertion between 2 blocks	Dark grey	PG5-R2	1SNK900403R0000	20	8.00

Main technical data

Material specifications	Insulating material	Polyamide	
	Flammability	V0	
	NF F 16 101	I2F2	
Ambient temperature min/max	Service IEC 60068-2-1	-55 ... +110 °C	-67 ... +230 °F
	Storage	-55 ... +110 °C	-67 ... +230 °F
	Installing	-5 ... +40 °C	+23 ... +104 °F

	IEC	UL - CSA
Rated current		
Rated voltage	250 V	
Impulse withstand voltage	4000 V	
Protection	IP20	NEMA 1

All the main technical data provided are "manufacturer" values

RoHS
RoHS

Accessories

Description		Color	Type	Part Number	Pkg qty	Weight (1 pce) g
Terminal block markers		White	MG-CPM 13 41790	1SNB041790R0512	1960	0.23
Blank card	In polycarbonate		MC512	1SNK140000R0000	22	9.00
	Blank card		MC512PA	1SNK149999R0000	20	10.00
Universal wire markers holder	5.2 mm 0.205 in spacing	Grey	UMH	1SNK900611R0000	10	0.20

Technical data valid for copper conductors only.

1SNK160039S0201

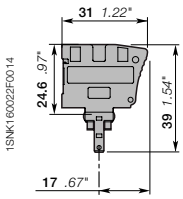

PG5

5.2 mm 0.205 in spacing

Mounting instructions

– Direct plug-in in disconnect with plug terminal block

PG5 component plugs

Description

– Ease the components installation (components not supplied with plug) with our quick plug-in mounting system which avoids soldering process,
– Accept 8.8 x 3.2 mm 0.346 x 0.125 in components such as resistors, diodes or subminiature fuses (fully encapsulated),
– Maximum dissipated power: 1 W.

Ordering details

Description	Color	Type	Part Number	Pkg qty	Weight (1 pce) g
Components in series with circuit	Dark grey	PG5	1SNK900401R0000	20	3.50

Main technical data

Material specifications	Insulating material	Polyamide	
	Flammability	V0	
	NF F 16 101	I2F2	
Ambient temperature min/max	Service IEC 60068-2-1	-55 ... +110 °C	-67 ... +230 °F
	Storage	-55 ... +110 °C	-67 ... +230 °F
	Installing	-5 ... +40 °C	+23 ... +104 °F

	IEC	UL - CSA
Rated current		
Rated voltage	400 V	150 V
Impulse withstand voltage	6000 V	
Protection	IP20	NEMA 1

All the main technical data provided are "manufacturer" values

RoHS
RoHS

Accessories

Description		Color	Type	Part Number	Pkg qty	Weight (1 pce) g
Terminal block markers		White	MG-CPM 13 41790	1SNB041790R0512	1960	0.23
Blank card	In polycarbonate		MC512	1SNK140000R0000	22	9.00
	Blank card		MC512PA	1SNK149999R0000	20	10.00
Universal wire markers holder	5.2 mm 0.205 in spacing	Grey	UMH	1SNK900611R0000	10	0.20

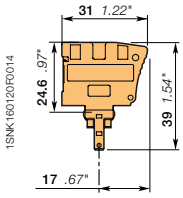

PG5

5.2 mm 0.205 in spacing

Mounting instructions

– PG5-R1 totally inserted: closed circuit,
– PG5-R1 inserted in central position: open circuit, plug secured in isolated central position

PG5-R1 disconnect plugs

Description

Allow disconnect function when associated with the disconnect with plug terminal blocks.

Ordering details

Description	Color	Type	Part Number	Pkg qty	Weight (1 pce) g
Equipped with linking bar	Orange	PG5-R1	1SNK900402R0000	20	3.50

Main technical data

Material specifications	Insulating material	Polyamide	
	Flammability	V0	
	NF F 16 101	I2F3	
Ambient temperature min/max	Service IEC 60068-2-1	-55 ... +110 °C	-67 ... +230 °F
	Storage	-55 ... +110 °C	-67 ... +230 °F
	Installing	-5 ... +40 °C	+23 ... +104 °F

	IEC	UL - CSA
Rated current	18 A	20 A
Rated voltage	400 V	150 V
Impulse withstand voltage	6000 V	
Protection	IP20	NEMA 1

All the main technical data provided are "manufacturer" values

RoHS
RoHS

Accessories

Description		Color	Type	Part Number	Pkg qty	Weight (1 pce) g
Terminal block markers		White	MG-CPM 13 41790	1SNB041790R0512	1960	0.23
Blank card	In polycarbonate		MC512	1SNK140000R0000	22	9.00
	Blank card		MC512PA	1SNK149999R0000	20	10.00
Universal wire markers holder	5.2 mm 0.205 in spacing	Grey	UMH	1SNK900611R0000	10	0.20

Technical data valid for copper conductors only.

1SNK160037S0201

1SNK160242F0014

TO

TO screwdrivers

Description

Flat head screwdriver

Ordering details

Description	Color	Type	Part Number		Pkg qty	Weight (1 pce) g
Insulated screwdriver 1000V IEC dimensions 3.5 x 100 mm 0.138 x 3.94 in		TO3.5-100-INS	1SNK900644R0000		1	37.00
screwdriver 3.5 x 50 mm 0.138 x 1.97 in		TO3.5-50	1SNK900640R0000		12	22.00
screwdriver 3.5 x 50 mm 0.138 x 1.97 in Angled 60°		TO3.5-50-A	1SNK900659R0000		12	21.6
screwdriver 4 x 100 mm 0.157 x 3.94 in		TO4-100	1SNK900641R0000		1	42.00
screwdriver 5.5 x 125 mm 0.216 x 4.92 in		TO5.5-125	1SNK900642R0000		1	75.50
screwdriver 6.5 x 150 mm 0.256 x 5.90 in		TO6.5-150	1SNK900643R0000		1	121.00

1SNK160127F0014

PS

PS crimping tools

Description

- Crimp flexible conductors equipped with ferrules from 0.08 to 10 mm² 28 AWG to 7 AWG,
- Semi-automatic crimping tool.

Ordering details

Description	Color	Type	Part Number		Pkg qty	Weight (1 pce) g
180 mm 7.09 in length		PS-3	1SNK900650R0000		1	380.00

1SNK160028S0201

Technical data valid for copper conductors only.

1SNK160233V0014

EK2.5

EK2.5 end sections

Description

- Unique dark grey color that fits all terminal blocks colours and ease the identification of circuits within your terminal block assemblies,
- Compatible with ZK2.5, ZK2.5-PE, ZK4, ZK4-PE, ZK6 and ZK6-PE PI-Spring screwless terminal blocks.

Ordering details

Description	Color	Type	Part Number		Pkg qty	Weight (1 pce) g
2 mm 0.079 in spacing	Dark grey	EK2.5	1SNK705910R0000		20	1.80

1SNK160234V0014

EK2.5-3P

EK2.5-3P end sections

Description

- Unique dark grey color that fits all terminal blocks colours and ease the identification of circuits within your terminal block assemblies,
- Compatible with ZK2.5-3P, ZK2.5-PE-3P, ZK4-3P, ZK4-PE-3P, ZK2.5-S..., ZK2.5-SP and ZK2.5-SF... PI-Spring screwless terminal blocks.

Ordering details

Description	Color	Type	Part Number		Pkg qty	Weight (1 pce) g
2 mm 0.079 in spacing	Dark grey	EK2.5-3P	1SNK705911R0000		20	2.40

1SNK160235V0014

EK2.5-4P

EK2.5-4P end sections

Description

- Unique dark grey color that fits all terminal blocks colours and ease the identification of circuits within your terminal block assemblies,
- Compatible with ZK2.5-4P, ZK2.5-PE-4P, ZK4-4P and ZK4-PE-4P PI-Spring screwless terminal blocks.

Ordering details

Description	Color	Type	Part Number		Pkg qty	Weight (1 pce) g
2 mm 0.079 in spacing	Dark grey	EK2.5-4P	1SNK705912R0000		20	2.70

Main technical data

Material specifications	Insulating material	Polyamide	
	Flammability	V0	
	NF F 16 101	I2F2	
Ambient temperature min/max	Service IEC 60068-2-1	-55 ... +110 °C	-67 ... +230 °F
	Storage	-55 ... +110 °C	-67 ... +230 °F
	Installing	-5 ... +40 °C	+23 ... +104 °F

All the main technical data provided are "manufacturer" values.

RoHS
RoHS

1SNK160064S0201

Technical data valid for copper conductors only.

1SNK160339V0014

EK2.5-S-4P

EK2.5-S-4P end sections

Description

- Unique dark grey color that fits all terminal blocks colours and ease the identification of circuits within your terminal block assemblies,
- Compatible with ZK2.5-S-4P, ZK2.5-SP-4P, ZK2.5-CH-4P... PI-Spring screwless terminal blocks.

Ordering details

Description	Color	Type	Part Number		Pkg qty	Weight (1 pce) g
2 mm 0.079 in spacing	Dark grey	EK2.5-S-4P	1SNK705913R0000		20	2.94

1SNK160237V0014

EK2.5-D2

EK2.5-D2 end sections

Description

- Compatible with ZK2.5-D2, ZK2.5-D2-PE, ZK2.5-D1 and ZK2.5-D1-PE PI-Spring screwless terminal blocks.

Ordering details

Description	Color	Type	Part Number		Pkg qty	Weight (1 pce) g
2 mm 0.079 in spacing	Dark grey	EK2.5-D2	1SNK705960R0000		20	3.40

1SNK160346V0014

EK2.5-T3

EK2.5-T3 end sections

Description

- Compatible with ZK2.5-T3, ZK2.5-T1, ZK2.5-T1-PE, ZK2.5-L-L-PE and ZK2.5-L-N-PE PI-Spring screwless terminal blocks.

Ordering details

Description	Color	Type	Part Number		Pkg qty	Weight (1 pce) g
0.8 mm 0.031 in spacing	Dark grey	EK2.5-T3	1SNK705961R0000		20	4.76

Main technical data

Material specifications	Insulating material	Polyamide	
	Flammability	V0	
	NF F 16 101	I2F2	
Ambient temperature min/max	Service IEC 60068-2-1	-55 ... +110 °C	-67 ... +230 °F
	Storage	-55 ... +110 °C	-67 ... +230 °F
	Installing	-5 ... +40 °C	+23 ... +104 °F

All the main technical data provided are "manufacturer" values.

RoHS
RoHS

Technical data valid for copper conductors only.

1SNK160065S0201

5

1SNK160236V0014

EK6-3P

EK6-3P end sections

Description

– Compatible with ZK6-3P and ZK6-PE-3P PI-Spring screwless terminal blocks.

Ordering details

Description	Color	Type	Part Number		Pkg qty	Weight (1 pce) g
2 mm 0.079 in spacing	Dark grey	EK6-3P	1SNK708911R0000		20	2.80

1SNK160238V0014

EK10

EK10 end sections

Description

– Compatible with ZK10, ZK10-PE, ZK16 and ZK16-PE PI-Spring screwless terminal blocks.

Ordering details

Description	Color	Type	Part Number		Pkg qty	Weight (1 pce) g
2 mm 0.079 in spacing	Dark grey	EK10	1SNK710910R0000		20	3.30

1SNK160318V0014

EK10-3P

EK10-3P end sections

Description

– Unique dark grey color that fits all terminal blocks colours and ease the identification of circuits within your terminal block assemblies,
– Compatible with ZK10-3P, ZK10-PE-3P, ZK16-3P, ZK16-PE-3P... PI-Spring screwless terminal blocks.

Ordering details

Description	Color	Type	Part Number		Pkg qty	Weight (1 pce) g
2 mm 0.079 in spacing	Dark grey	EK10-3P	1SNK710911R0000		20	4.5

Main technical data

Material specifications	Insulating material	Polyamide	
	Flammability	V0	
	NF F 16 101	I2F2	
Ambient temperature min/max	Service IEC 60068-2-1	-55 ... +110 °C	-67 ... +230 °F
	Storage	-55 ... +110 °C	-67 ... +230 °F
	Installing	-5 ... +40 °C	+23 ... +104 °F

All the main technical data provided are "manufacturer" values.

RoHS
RoHS

Technical data valid for copper conductors only.

1SNK160095S0201

CS-R2

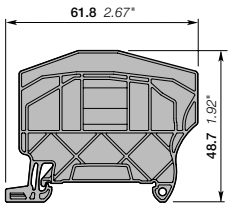

3 mm 0.118 in spacing

CS-R2 circuit separators

Description

- Compact circuits separator solution (only 3mm spacing) which provides a convenient visual identification of the several circuits within terminal assemblies,
- Unique top marking possibility that can replace the conventional solution of "end stop with label holder" for demanding applications with high space constraints, - Compatible with all PI-spring feed-through and ground terminal blocks up to 8 mm spacing,
- Mounting on DIN3-TH35 rail.

Ordering details

Description	Color	Type	Part Number	Pkg qty	Weight (1 pce) g
3 mm 0.118 in spacing	Dark grey	CS-R2	1SNK900106R0000	20	3.80

Main technical data

Material specifications	Insulating material	Polyamide	
	Flammability	V0	
	NF F 16 101	I2F2	
Ambient temperature min/max	Service IEC 60068-2-1	-55 ... +110 °C	-67 ... +230 °F
	Storage	-55 ... +110 °C	-67 ... +230 °F
	Installing	-5 ... +40 °C	+23 ... +104 °F

All the main technical data provided are "manufacturer" values

RoHS
RoHS

Accessories

Description		Color	Type	Part Number	Pkg qty	Weight (1 pce) g
Terminal block markers		White	MG-CPM 13 41791	1SNB041791R0612	1680	0.27
Labels		Yellow	MG-VYT 46415	1SNB046415R0615	5250	0.04
		White	MG-VYT 46915	1SNB046915R0615	5250	0.05
Blank card	In polycarbonate	White	MC612	1SNK150000R0000	22	10.00
	Blank card		MC612PA	1SNK159999R0000	20	11.00
Universal wire markers holder	5.2 mm 0.205 in spacing	Grey	UMH	1SNK900611R0000	10	0.20

5

1SNK160072S0201

Technical data valid for copper conductors only.

CS-R3

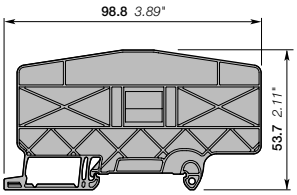

3 mm 0.118 in spacing

CS-R3 circuit separators

Description

- Compact circuits separator solution (only 3mm spacing) which provides a convenient visual identification of the several circuits within terminal assemblies,
- Unique top marking possibility that can replace the conventional solution of "end stop with label holder" for demanding applications with high space constraints,
- Compatible with all single deck PI-spring terminal blocks and ZS10-ST...terminal blocks ,
- Mounting on DIN3-TH35 rail.

Ordering details

Description	Color	Type	Part Number	Pkg qty	Weight (1 pce) g
3 mm 0.118 in spacing	Dark grey	CS-R3	1SNK900107R0000	20	6.40

Main technical data

Material specifications	Insulating material	Polyamide	
	Flammability	V0	
	NF F 16 101	I2F2	
Ambient temperature min/max	Service IEC 60068-2-1	-55 ... +110 °C	-67 ... +230 °F
	Storage	-55 ... +110 °C	-67 ... +230 °F
	Installing	-5 ... +40 °C	+23 ... +104 °F

All the main technical data provided are "manufacturer" values

RoHS
RoHS

Accessories

Description		Color	Type	Part Number	Pkg qty	Weight (1 pce) g
Terminal block markers		White	MG-CPM 13 41790	1SNB041790R0512	1960	0.23
			MG-CPM 13 41791	1SNB041791R0612	1680	0.27
Labels		Yellow	MG-VYT 46415	1SNB046415R0615	5250	0.04
		White	MG-VYT 46915	1SNB046915R0615	5250	0.05
Blank card	In polycarbonate	White	MC512	1SNK140000R0000	22	9.00
	Blank card		MC512PA	1SNK149999R0000	20	10.00
	In polycarbonate		MC612	1SNK150000R0000	22	10.00
	Blank card		MC612PA	1SNK159999R0000	20	11.00
Universal wire markers holder	5.2 mm 0.205 in spacing	Grey	UMH	1SNK900611R0000	10	0.20

Technical data valid for copper conductors only.

SHBP/SHB

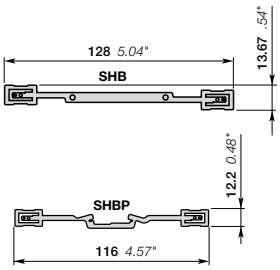

SHBP/SHB shield connectors for PI-Spring terminal blocks

Description

- Ensure the continuity of your shield connection,
- Various connection solutions available: RILS cable ties, soldering, quick-connect.

Ordering details

Description	Color	Type	Part Number		Pkg qty	Weight (1 pce) g
Compatible with ZK2.5 and ZK2.5-S terminal blocks		SHBP	1SNK900601R0000		20	4.10
Compatible with ZS and ZK double deck terminal blocks		SHB	1SNK900602R0000		20	4.90

Main technical data

Material specifications	Insulating material					
	Flammability					
	NF F 16 101					
Ambient temperature min/max	Service IEC 60068-2-1	-55 ... +110 °C	-67 ... +230 °F			
	Storage	-55 ... +110 °C	-67 ... +230 °F			
	Installing	-5 ... +40 °C	+23 ... +104 °F			

SHBP	IEC	UL - CSA	Ex e
Rated voltage	100 V		50 V

All the main technical data provided are "manufacturer" values

RoHS
RoHS

Accessories for screw clamp and PI-Spring terminal blocks

Description		Color	Type	Part Number		Pkg qty	Weight (1 pce) g
Cable ties	For SNK shield connector		RILS	1SNK900627R0000		10	0.30

Mounting instructions

- SHBS is directly fixed on the terminal block,
- SHB is fixed on the ES4-D2 end section,
- SHBP is directly fixed on the terminal block,
- Connect the cable shielding on the shielding connector with:
- RILS cable ties,
- quick-connect (the shield connector needs to be prepared),
- soldering iron.

1SNK160044S0201

Technical data valid for copper conductors only.

1SNK161013F0014

ES4

ES4 end sections

Description

- Unique dark grey color that fits all terminal blocks colours and ease the identification of circuits within your terminal block assemblies,
- Compatible with feed-through, ground and disconnect screw clamp terminal blocks.

Ordering details

Description	Color	Type	Part Number		Pkg qty	Weight (1 pce) g
2.2 mm 0.087 in spacing	Dark grey	ES4	1SNK505910R0000		20	2.20

1SNK160229V0014

ES6-3S

ES6-3S end sections

Description

- Compatible with ZS6-3S and ZS6-3S-PE terminal blocks.

Ordering details

Description	Color	Type	Part Number		Pkg qty	Weight (1 pce) g
2.2 mm 0.087 in spacing	Dark grey	ES6-3S	1SNK505912R0000		20	2.50

1SNK160230V0014

ES6-4S

ES6-4S end sections

Description

- Compatible with ZS6-4S, ZS6-4S-PE, ZS6-S-4S-T2 and ZS4-PE-R2 terminal blocks.

Ordering details

Description	Color	Type	Part Number		Pkg qty	Weight (1 pce) g
2.2 mm 0.087 in spacing	Dark grey	ES6-4S	1SNK505911R0000		20	3.10

1SNK161012F0014

ES4-D2

ES4-D2 end sections

Description

- Unique dark grey color that fits all terminal blocks colours and ease the identification of circuits within your terminal block assemblies,
- Compatible with double deck screw clamp terminal blocks

Ordering details

Description	Color	Type	Part Number		Pkg qty	Weight (1 pce) g
2.55 mm 0.100 in spacing	Dark grey	ES4-D2	1SNK505960R0000		20	4.10

Main technical data

Material specifications	Insulating material	Polyamide	
	Flammability	V0	
	NF F 16 101	I2F2	
Ambient temperature min/max	Service IEC 60068-2-1	-55 ... +110 °C	-67 ... +230 °F
	Storage	-55 ... +110 °C	-67 ... +230 °F
	Installing	-5 ... +40 °C	+23 ... +104 °F

All the main technical data provided are "manufacturer" values.

RoHS
RoHS

Technical data valid for copper conductors only.

1SNK160061S0201

ES4-T3

ES4-T3 end sections

Description

– Compatible with ZS4-T3 terminal block.

Ordering details

Description	Color	Type	Part Number		Pkg qty	Weight (1 pce) g
0.8 mm 0.031 in spacing	Dark grey	ES4-T3	1SNK505961R0000		20	4.20

ES4-SF

ES4-SF end sections

Description

– Compatible with fuse ZS4-SF1... and disconnect screw clamp terminal blocks ZS4-S-R3.

Ordering details

Description	Color	Type	Part Number		Pkg qty	Weight (1 pce) g
1.5 mm 0.059 in spacing	Dark grey	ES4-SF	1SNK508960R0000		20	1.80

ES4-D2-SF1

ES4-D2-SF1 end sections

Description

– Compatible with ZS4-D2-SF1 ... terminal blocks.

Ordering details

Description	Color	Type	Part Number		Pkg qty	Weight (1 pce) g
2.5 mm 0.098 in spacing	Dark grey	ES4-D2-SF1	1SNK508911R0000		20	5.00

ES10-ST

ES10-ST end sections

Description

– Unique dark grey color that fits all test disconnect terminal blocks ZS10-ST... and ease the identification of circuits within your terminal block assemblies,
– Also compatible with ZS10-R1 and ZS10-PE-R1.

Ordering details

Description	Color	Type	Part Number		Pkg qty	Weight (1 pce) g
2 mm 0.079 in spacing	Dark grey	ES10-ST	1SNK508910R0000		20	3.5

Accessories

Description		Color	Type	Part Number		Pkg qty	Weight (1 pce) g
Circuit separators	0 mm 0 in spacing	Dark grey	CS	1SNK900101R0000		20	0.20

Main technical data

Material specifications	Insulating material	Polyamide	
	Flammability	V0	
	NF F 16 101	I2F2	
Ambient temperature min/max	Service IEC 60068-2-1	-55 ... +110 °C	-67 ... +230 °F
	Storage	-55 ... +110 °C	-67 ... +230 °F
	Installing	-5 ... +40 °C	+23 ... +104 °F

All the main technical data provided are "manufacturer" values.

RoHS
RoHS

Technical data valid for copper conductors only.

1SNK160062S0201

5

JB8

8 mm 0.315 in spacing

Mounting instructions

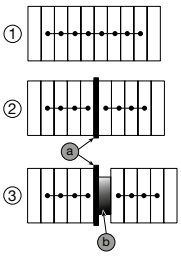

1 - Rated voltage: 160 V (IEC) / Not authorized (UL)
2 - Rated voltage: 320 V (IEC) / Not authorized (UL)
3 - Rated voltage: 1000 V (IEC) / 300 V (UL)
a - End section ES10-ST
b - End stop BAZ1

JB8 jumper bars

Description

Insulated jumper bar with screw mounting.

Ordering details

Description		Color	Type	Part Number		Pkg qty	Weight (1 pce) g
8 mm 0.315 in spacing	2 poles	Orange	JB8-2-R1	1SNK908902R0000		10	7.6
	3 poles		JB8-3-R1	1SNK908903R0000		10	11.6
	4 poles		JB8-4-R1	1SNK908904R0000		10	15.5
	5 poles		JB8-5-R1	1SNK908905R0000		10	19.4
	10 poles		JB8-10-R1	1SNK908910R0000		10	39.00

Main technical data

Material specifications	Insulating material	Polyamide		Rail		
	Flammability	V0				
	NF F 16 101	I2F3		Tool		Flat screwdriver Ø 3.5 mm Ø 0.138 in
Ambient temperature min/max	Service IEC 60068-2-1	-55 ... +110 °C	-67 ... +230 °F			
	Storage	-55 ... +110 °C	-67 ... +230 °F			
	Installing	-5 ... +40 °C	+23 ... +104 °F	Torque		0.7 Nm ± 0.1 6.2 lb.in ± 0.88

		IEC	UL - CSA	Ex e
Rated current		50 A	51 A	
Rated voltage	Standard use	160 V		
	Alternated poles			Not authorized
Impulse withstand voltage				
Protection		IP20	NEMA 1	

All the main technical data provided are "manufacturer" values

RoHS
RoHS

Technical data valid for copper conductors only.

1SNK161061S0201

JB16

16 mm 0.630 in spacing

Mounting instructions

- With flat pliers, cut out the partitions on the terminal block insulating body. Be careful to not cut out the jumpered terminal blocks partitions at both ends of the assembly in order to maintain the IP20, Nema1 protection and insulation,
- Install the jumper bar with the recommended tool and torque.

JB16 jumper bars

Description

Insulated jumper bar with screw mounting.

Ordering details

Description		Color	Type	Part Number		Pkg qty	Weight (1 pce) g
16 mm 0.630 in spacing	2 poles	Orange	JB16-2	1SNK916302R0000		10	10.00
	3 poles		JB16-3	1SNK916303R0000		10	16.00
	4 poles		JB16-4	1SNK916304R0000		10	22.00
	5 poles		JB16-5	1SNK916305R0000		10	28.00
	10 poles		JB16-10	1SNK916310R0000		10	56.60

Main technical data

Material specifications	Insulating material	Polyamide		Rail		
	Flammability	V0				
	NF F 16 101	I2F3		Tool		Flat screwdriver Ø 5.5 mm Ø 0.217 in
Ambient temperature min/max	Service IEC 60068-2-1	-55 ... +110 °C	-67 ... +230 °F			
	Storage	-55 ... +110 °C	-67 ... +230 °F			
	Installing	-5 ... +40 °C	+23 ... +104 °F	Torque		1.2 Nm ± 0.1 10.6 lb.in ± 0.885

		IEC	UL - CSA	Ex e
Rated current		125 A	150 A	
Rated voltage	Standard use	1000 V	600 V	
	Alternated poles			Not authorized
Impulse withstand voltage		8000 V		
Protection		IP20	NEMA 1	

All the main technical data provided are "manufacturer" values

RoHS
RoHS

JB22

22 mm 0.866 in spacing

Mounting instructions

- With flat pliers, cut out the partitions on the terminal block insulating body. Be careful to not cut out the jumpered terminal blocks partitions at both ends of the assembly in order to maintain the IP20, Nema1 protection and insulation,
- Install the jumper bar with the recommended tool and torque.

JB22 jumper bars

Description

Screw jumper bars

Ordering details

Description		Color	Type	Part Number		Pkg qty	Weight (1 pce) g
22 mm 0.866 in spacing	2 poles		JB22-2	1SNK922302R0000		5	27.00
	3 poles		JB22-3	1SNK922303R0000		5	43.30
	5 poles		JB22-5	1SNK922305R0000		5	76.10
	10 poles		JB22-10	1SNK922310R0000		5	157.40

Main technical data

Material specifications	Insulating material	Polyamide		Rail		
	Flammability					
	NF F 16 101			Tool		Allen key Ø 4 mm Ø 0.157 in
Ambient temperature min/max	Service IEC 60068-2-1	-55 ... +110 °C	-67 ... +230 °F			
	Storage	-55 ... +110 °C	-67 ... +230 °F			
	Installing	-5 ... +40 °C	+23 ... +104 °F	Torque		2 Nm ± 0.4 17.7 lb.in ± 3.54

		IEC	UL - CSA	Ex e
Rated current		192 A	175 A	
Rated voltage	Standard use	1000 V	600 V	630 V
	Alternated poles			Not authorized
Impulse withstand voltage		8000 V		
Protection		IP20		

All the main technical data provided are "manufacturer" values

RoHS
RoHS

Technical data valid for copper conductors only.

1SNK160032S0201

1SNK160100F0014

JB26

26 mm 1.024 in spacing

Mounting instructions

- With flat pliers, cut out the partitions on the terminal block insulating body. Be careful to not cut out the jumpered terminal blocks partitions at both ends of the assembly in order to maintain the IP20, Nema1 protection and insulation,
- Install the jumper bar with the recommended tool and torque.

JB26 jumper bars

Description

Screw jumper bars

Ordering details

Description		Color	Type	Part Number		Pkg qty	Weight (1 pce) g
26 mm 1.02 in spacing	2 poles		JB26-2	1SNK926302R0000		5	41.20
	3 poles		JB26-3	1SNK926303R0000		5	65.70
	5 poles		JB26-5	1SNK926305R0000		5	115.70
	10 poles		JB26-10	1SNK926310R0000		5	241.50

Main technical data

Material specifications	Insulating material			Rail		
	Flammability					
	NF F 16 101			Tool		Allen key Ø 4 mm Ø 0.157 in
Ambient temperature min/max	Service IEC 60068-2-1	-55 ... +110 °C	-67 ... +230 °F			
	Storage	-55 ... +110 °C	-67 ... +230 °F			
	Installing	-5 ... +40 °C	+23 ... +104 °F	Torque		2 Nm ± 0.4 17.7 lb.in ± 3.54

		IEC	UL - CSA	Ex e
Rated current		232 A	230 A	
Rated voltage	Standard use	1000 V	600 V	630 V
	Alternated poles			Not authorized
Impulse withstand voltage		8000 V		
Protection		IP20		

All the main technical data provided are "manufacturer" values

RoHS
RoHS

Technical data valid for copper conductors only.

1SNK160034S0201

1SNK160100F0014

BJMI31

31 mm 1.22 in spacing

Mounting instructions

- With flat pliers, cut out the partitions on the terminal block insulating body. Be careful to not cut out the jumpered terminal blocks partitions at both ends of the assembly in order to maintain the IP20, Nema1 protection and insulation,
- Install the jumper bar with the recommended tool and torque.

BJMI31 jumper bars

Description

Screw jumper bars

Ordering details

Description		Color	Type	Part Number		Pkg qty	Weight (1 pce) g
31mm 1.220 in spacing	2 poles		BJMI31.2	1SNA206053R0700		1	120.00
	3 poles		BJMI31.3	1SNA206054R0000		1	190.00

Main technical data

Material specifications	Insulating material			Rail		
	Flammability					
	NF F 16 101			Tool		Allen key Ø 5 mm Ø 0.196 in
Ambient temperature min/max	Service IEC 60068-2-1	-55 ... +110 °C	-67 ... +230 °F			
	Storage	-55 ... +110 °C	-67 ... +230 °F			
	Installing	-5 ... +40 °C	+23 ... +104 °F	Torque		3 Nm ± 0.4 26.55 lb.in ± 3.54

		IEC	UL - CSA	Ex e
Rated current		309 A	445 A	
Rated voltage	Standard use	1000 V	600 V	
	Alternated poles			Not authorized
Impulse withstand voltage		8000 V		
Protection		IP20		

All the main technical data provided are "manufacturer" values

RoHS
RoHS

1SNK160100F0014

BJMI36

36 mm 1.42 in spacing

Mounting instructions

- With flat pliers, cut out the partitions on the terminal block insulating body. Be careful to not cut out the jumpered terminal blocks partitions at both ends of the assembly in order to maintain the IP20, Nema1 protection and insulation,
- Install the jumper bar with the recommended tool and torque.

BJMI36 jumper bars

Description

Screw jumper bars

Ordering details

Description		Color	Type	Part Number		Pkg qty	Weight (1 pce) g
36mm 1.41i7 n spacing	2 poles		BJMI36.2	1SNA206126R2500		1	170.00
	3 poles		BJMI36.3	1SNA206223R0600		1	260.00

Main technical data

Material specifications	Insulating material			Rail		
	Flammability					
	NF F 16 101			Tool		Allen key Ø 5 mm Ø 0.196 in
Ambient temperature min/max	Service IEC 60068-2-1	-55 ... +110 °C	-67 ... +230 °F			
	Storage	-55 ... +110 °C	-67 ... +230 °F			
	Installing	-5 ... +40 °C	+23 ... +104 °F	Torque		3 Nm ± 0.4 26.55 lb.in ± 3.54

		IEC	UL - CSA	Ex e
Rated current		415 A	620 A	
Rated voltage	Standard use	1000 V	600 V	
	Alternated poles			Not authorized
Impulse withstand voltage		8000 V		
Protection		IP20		

All the main technical data provided are "manufacturer" values

RoHS
RoHS

1SNK160097S0201

Technical data valid for copper conductors only.

1SNC160112F0014

PC8

8 mm 0.315 in spacing

Mounting instructions for ZS10-ST...

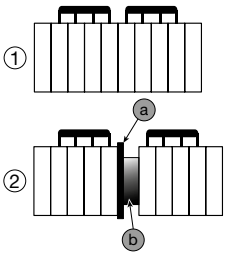

1 - Rated voltage: 630 V (IEC) / 150 V (UL)
2 - Rated voltage: 630 V (IEC) / 300 V (UL)
a - End section ES10-ST
b - End stop BAZ1

PC8 lateral jumper bars

Description

IP20 Comb jumper bars,

- direct insertion in the screw clamp before tightening the screws, above the eventual conductor (if conductor used with ferrule, we recommend the use of long ferrule for optimized mounting ergonomy with test disconnect terminal blocks),
- Multiple versions available in pre-cut poles for test disconnect terminal blocks applications.

Ordering details

Description		Color	Type	Part Number		Pkg qty	Weight (1 pce) g
Lateral jumper bars							
8 mm 0.315 in spacing	2 poles	Black ■	PC8-2	1SNA116538R1700		10	3.00
	3 poles		PC8-3	1SNA116539R1000		10	4.00
	4 poles		PC8-4	1SNA116540R2500		10	6.00
	10 poles		PC8-10	1SNA163313R2400		10	14.00
Lateral jumper bars pre-cut poles							
8 mm 0.315 in spacing	4/6 poles	Black ■	PC8-R1	1SNA400711R0600		10	6.60
	4/8 poles		PC8-R2	1SNA400712R0700		10	7.80
	4/10 poles		PC8-R3	1SNA400713R0000		10	9.00
	3/4 poles		PC8-R4	1SNA400724R0300		10	4.50
	4/7 poles		PC8-R5	1SNA400842R0000		10	6.60
	2/3 poles		PC8-R6	1SNA400843R0000		10	6.60
	4/6 poles		PC8-R7	1SNA400849R0000		10	6.60
	4/8 poles		PC8-R8	1SNA400850R0000		10	7.80

Main technical data

Material specifications	Insulating material	Polyamide	
	Flammability	V0	
	NF F 16 101	I2F3	
Ambient temperature min/max	Service IEC 60068-2-1	-55 ... +110 °C	-67 ... +230 °F
	Storage	-55 ... +110 °C	-67 ... +230 °F
	Installing	-5 ... +40 °C	+23 ... +104 °F

All the main technical data provided are "manufacturer" values

RoHS
RoHS

1SNC160537F0014

PC81

8 mm 0.315 in spacing

PC81 lateral jumper bars

Description

Comb-type jumper bar, allows the connection of consecutive blocks or not by one compression clamp connection.

Ordering details

Description		Color	Type	Part Number		Pkg qty	Weight (1 pce) g
8 mm 0.315 in spacing	10 poles	Grey □	PC81-10	1SNA173523R1100		10	5.00

Main technical data

Material specifications	Insulating material	Brass/polyamide	
	Flammability	V0	
	NF F 16 101	I2F3	
Ambient temperature min/max	Service IEC 60068-2-1	-55 ... +110 °C	-67 ... +230 °F
	Storage	-55 ... +110 °C	-67 ... +230 °F
	Installing	-5 ... +40 °C	-23 ... +104 °F

All the main technical data provided are "manufacturer" values

RoHS
RoHS

1SNK161060S0201

Technical data valid for copper conductors only.

CS

0 mm 0 in spacing

Mounting instructions

CS circuit separators

Description

- The CS circuit separator avoids the derating of terminal blocks when cut jumper bars JB are used,
- Compatible with feed-through terminal blocks up to 16 mm² 4 AWG,
- Without spacing loss.

Ordering details

Description	Color	Type	Part Number	Pkg qty	Weight (1 pce) g
0 mm 0 in spacing	Dark grey	CS	1SNK900101R0000	20	0.20

Main technical data

Material specifications	Insulating material	Polyamide	
	Flammability	V0	
	NF F 16 101	I2F2	
Ambient temperature min/max	Service IEC 60068-2-1	-55 ... +110 °C	-67 ... +230 °F
	Storage	-55 ... +110 °C	-67 ... +230 °F
	Installing	-5 ... +40 °C	+23 ... +104 °F

All the main technical data provided are "manufacturer" values

RoHS
RoHS

CS-R1

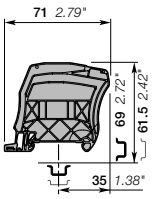

3 mm 0.118 in spacing

Mounting instructions

CS-R1 circuit separators

Description

- Ease the visual identification of the several circuits within your terminal block assemblies,
- Compatible with feed-through terminal blocks up to 35 mm² 0 AWG,
- Intermediate cover holder for CO protective cover,
- Mounting on DIN3-TH35 rail.

Ordering details

Description	Color	Type	Part Number	Pkg qty	Weight (1 pce) g
3 mm 0.118 in spacing	Dark grey	CS-R1	1SNK900103R0000	20	5.20

Main technical data

Material specifications	Insulating material	Polyamide	
	Flammability	V0	
	NF F 16 101	I2F2	
Ambient temperature min/max	Service IEC 60068-2-1	-55 ... +110 °C	-67 ... +230 °F
	Storage	-55 ... +110 °C	-67 ... +230 °F
	Installing	-5 ... +40 °C	+23 ... +104 °F

All the main technical data provided are "manufacturer" values

RoHS
RoHS

Accessories

Description		Color	Type	Part Number	Pkg qty	Weight (1 pce) g
Terminal block markers		White	MG-CPM 13 41790	1SNB041790R0512	1960	0.23
Blank card	In polycarbonate		MC512	1SNK140000R0000	22	9.00
	Blank card		MC512PA	1SNK149999R0000	20	10.00
Universal wire markers holder	5.2 mm 0.205 in spacing	Grey	UMH	1SNK900611R0000	10	0.20

Technical data valid for copper conductors only.

1SNK160018S0201

SHBS/SHB

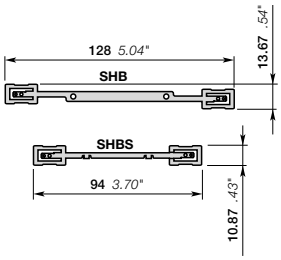

SHBS/SHB shield connectors

Description

- Ensure the continuity of your shield connection,
- Various connection solutions available: RILS cable ties, soldering, quick-connect.

Ordering details

Description		Color	Type	Part Number		Pkg qty	Weight (1 pce) g
Compatible with ZS feed-through terminal blocks			SHBS	1SNK900600R0000		20	3.50
Compatible with ZS and ZK double deck terminal blocks			SHB	1SNK900602R0000		20	4.90

Main technical data

Material specifications	Insulating material					
	Flammability					
	NF F 16 101					
Ambient temperature min/max	Service IEC 60068-2-1	-55 ... +110 °C	-67 ... +230 °F			
	Storage	-55 ... +110 °C	-67 ... +230 °F			
	Installing	-5 ... +40 °C	+23 ... +104 °F			

SHBS	IEC	UL - CSA	Ex e
Rated voltage	320 V		125 V

All the main technical data provided are "manufacturer" values

RoHS
RoHS

Accessories for screw clamp and PI-Spring terminal blocks

Description		Color	Type	Part Number		Pkg qty	Weight (1 pce) g
Cable ties	For SNK shield connector		RILS	1SNK900627R0000		10	0.30

Mounting instructions

- SHBS is directly fixed on the terminal block,
- SHB is fixed on the ES4-D2 end section,
- SHBP is directly fixed on the terminal block,
- Connect the cable shielding on the shielding connector with:
- RILS cable ties,
- quick-connect (the shield connector needs to be prepared),
- soldering iron.

1SNK160079S0201

Technical data valid for copper conductors only.

PL protecting covers
Screw clamp terminal block accessories

PL

Mounting instructions

- The mounting of the PL does not require a screwdriver,
- The dismounting of the PL requires a screwdriver DIA .4 mm 0.160 in, the screwdriver must be positionned in the cover centered hole.

Description

- Prohibit access to the screw clamps,
- Indicate live circuits.

Ordering details

Description	Color	Type	Part Number		Pkg qty	Weight (1 pce) g
5.2 mm 0.205 in spacing	Transparent	PL5	1SNK900618R0000		10	1.50
6 mm 0.236 in spacing		PL6	1SNK900619R0000		10	1.80
8 mm 0.315 in spacing		PL8	1SNK900620R0000		10	2.60
10 mm 0.394 in spacing		PL10	1SNK900621R0000		10	3.10
16 mm 0.630 in spacing		PL16	1SNK900622R0000		10	4.60

Main technical data

Material specifications	Insulating material	Polycarbonate	
	Flammability	V2	
	NF F 16 101		
Ambient temperature min/max	Service IEC 60068-2-1	-55 ... +110 °C	-67 ... +230 °F
	Storage	-55 ... +110 °C	-67 ... +230 °F
	Installing	-5 ... +40 °C	+23 ... +104 °F

Mounting instructions

Tool		Flat screwdriver Ø 4 mm Ø 0.157 in

All the main technical data provided are "manufacturer" values

RoHS
RoHS

Technical data valid for copper conductors only.

1SNK160021S0201

1SNK160110F0014

CO

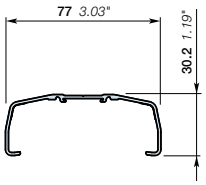

CO protecting covers

Description

- Restrict access to your assembly with the protecting cover CO installed with KCO mounting kit (2 end stops, 2 sealing accessories),
- Compatible with SNK feed-through terminal blocks up to 35 mm² 0 AWG.

Ordering details

Description	Color	Type	Part Number		Pkg qty	Weight (1 pce) g
1 m 39.4 in length	Transparent	CO	1SNK900604R0000		1	300.00

Main technical data

Material specifications	Insulating material	PVC				
	Flammability	V0				
	NF F 16 101					
Ambient temperature min/max	Service IEC 60068-2-1	-55 ... +80 °C	-67 ... +176 °F			
	Storage	-55 ... +80 °C	-67 ... +176 °F			
	Installing	-5 ... +40 °C	+23 ... +104 °F			

All the main technical data provided are "manufacturer" values

RoHS
RoHS

Accessories

Description		Color	Type	Part Number		Pkg qty	Weight (1 pce) g
Protecting cover kits	Mounting kit for cover CO	Dark grey	KCO	1SNK900624R0000		1	47.80
Label		White	PAM43020	1SNA235106R2600		20	27.00

Mounting instructions

Restrict access to the circuit by sealing the cover:
- Drill on the CO center line at 5 mm 0.197 in from the extremity with 5 mm 0.197 in diameter drill,
- Pass the sealing collar through the CO and KCO holes.

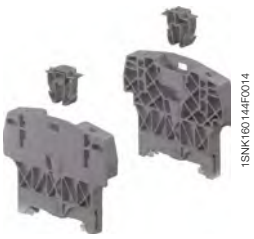

1SNK160144F0014

KCO

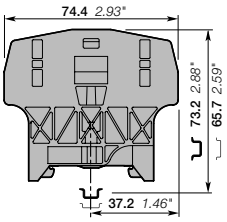

KCO protecting cover kits

Description

Mount your protecting cover with the KCO versatile mounting kit (2 end stops, 2 sealing accessories):
- Maintain the cover,
- Reliably seal the access to the terminal assembly if needed,
- Use it as well as an end stop.

Ordering details

Description	Color	Type	Part Number		Pkg qty	Weight (1 pce) g
Mounting kit for cover CO	Dark grey	KCO	1SNK900624R0000		1	47.80

Main technical data

Material specifications	Insulating material	Polyamide		Rail		G32, TH 35-7.5, TH 35-15, TH 15-5.5
	Flammability	V0				
	NF F 16 101			Tool		Flat screwdriver Ø 4 mm Ø 0.157 in
Ambient temperature min/max	Service IEC 60068-2-1	-55 ... +110 °C	-67 ... +230 °F			
	Storage	-55 ... +110 °C	-67 ... +230 °F			
	Installing	-5 ... +40 °C	+23 ... +104 °F			

All the main technical data provided are "manufacturer" values

RoHS
RoHS

Technical data valid for copper conductors only.

1SNK160045S0201

1SNK160221F0014

SC-JB8

8 mm 0.315 in spacing

SC-JB8 short circuit bridges

Description

- Allow safe short-circuiting of current Tranformers circuits,
- Insulated,
- Fully operated by screwdriver,
- Short circuited fixed position secured thanks to AJS9 tightening,
- Adapted hook shape maintains the bridge on the terminal block in the non short-circuited position,
- The orange version can be used as fixed jumpers.

Ordering details

Description		Color	Type	Part Number	Pkg qty	Weight (1 pce) g
8 mm 0.315 in spacing	2 poles	Yellow	SC-JB8-2	1SNK900652R0000	25	2.00
	3 poles		SC-JB8-3	1SNK900653R0000	25	3.4
	4 poles		SC-JB8-4	1SNK900654R0000	25	4.7
	3/5 poles		SC-JB8-5	1SNK900655R0000	25	4.7
	3 poles	Orange	SC-JB8-3-OR	1SNK900657R0000	25	
	4 poles		SC-JB8-4-OR	1SNK900658R0000	25	

Main technical data

Material specifications	Insulating material	Polyamide	
	Flammability	V0	
	NF F 16 101	I2F3	
Ambient temperature min/max	Service IEC 60068-2-1	-55 ... +110 °C	-67 ... +230 °F
	Storage	-55 ... +110 °C	-67 ... +230 °F
	Installing	-5 ... +40 °C	+23 ... +104 °F

All the main technical data provided are "manufacturer" values

RoHS
RoHS

5

1SNK161063S0201

Technical data valid for copper conductors only.

1SNC160482F0014

AJS

4 mm 0.157 in spacing

AJS test sockets

Description

– Insulated test sockets,
  - Many colors available for circuit identification,
  - Compatible with standard DIA 4 mm 0.157 in test plugs:
  - insulated (according to IEC 60101-031) - not insulated (with mobile protection),
  - Compatible with ZS10-ST…SNK series terminal blocks, M6/8.ST...SNA series terminal blocks, D6/8. ST.RS..Solution series terminal blocks

Ordering details

Description	Color	Type	Part Number		Pkg qty	Weight (1 pce) g
Test sockets DIA 4 mm 0.157 in	Grey	AJS9-GR	1SNA206682R0300		25	3.60
	Blue	AJS9-BL	1SNA206683R0400		25	3.60
	Yellow	AJS9	1SNA179726R0200		25	3.60
	Green	AJS9-GN	1SNA206681R0200		25	3.60
	Red	AJS9-RD	1SNA206720R1400		25	3.60
	Purple	AJS9-PR	1SNA206772R0000		25	3.60
	Brown	AJS9-BR	1SNA206782R0000		25	3.60
	White	AJS9-WH	1SNA206765R0000		25	3.60
	Black	AJS9-BK	1SNA206680R1500		25	3.60

Main technical data

Material specifications	Insulating material	Polyamide	
	Flammability	V0	
	NF F 16 101	I2F3	
Ambient temperature min/max	Service IEC 60068-2-1	-55 ... +110 °C	-67 ... +230 °F
	Storage	-55 ... +110 °C	-67 ... +230 °F
	Installing	-5 ... +40 °C	+23 ... +104 °F

Mounting instructions

Tool		Flat screwdriver Ø 3.5 mm Ø 0.138 in
Torque		0.5 Nm ± 0.1 4.42 lb.in ± 0.88

All the main technical data provided are "manufacturer" values

RoHS
RoHS

Technical data valid for copper conductors only.

1SNK161064S0201

EDK2.5-22

EDK2.5-22 end sections

Description

– Compatible with ZDK2.5-22 and ZDK4-22 pluggable terminal blocks.

Description	Color	Type	Part Number	Pkg qty	Weight 1 pce g
2.2 mm 0.087 in spacing	Dark grey	EDK2.5-22	1SNK805910R0000	20	3.08

EDK2.5-21

EDK2.5-21 end sections

Description

– Compatible with ZDK2.5-11, ZDK2.5-11-BL and ZDK2.5-11-PE pluggable terminal blocks.

Description	Color	Type	Part Number	Pkg qty	Weight 1 pce g
1.5 mm 0.059 in spacing	Dark grey	EDK2.5-21	1SNK805914R0000	20	1.90

EDK2.5-11

EDK2.5-11 end sections

Description

– Compatible with ZD2.5-11 pluggable terminal blocks.

Description	Color	Type	Part Number	Pkg qty	Weight 1 pce g
1.5 mm 0.059 in spacing	Dark grey	EDK2.5-11	1SNK805915R0000	20	1.49

EDK2.5-D

EDK2.5-D end sections

Description

– Compatible with ZDK2.5-D2, ZDK2.5-D2-BL, ZDK2.5-D1, ZDK2.5-D1-PE and ZDK2.5-D2-PE pluggable terminal blocks.

Description	Color	Type	Part Number	Pkg qty	Weight 1 pce g
2 mm 0.079 in spacing	Dark grey	EDK2.5-D	1SNK805913R0000	20	3.88

Main technical data

Material specifications	Insulating material	Polyamide	
	Flammability	V0	
	NF F 16 101	I2F2	
Ambient temperature min/max	Service IEC 60068-2-1	-55 ... +110 °C	-67 ... +230 °C
	Storage	-55 ... +110 °C	-67 ... +230 °C
	Installing	-5 ... +40 °C	+23 ... +104 °C

All the main technical data provided are "manufacturer" values.

RoHS
RoHS

Technical data valid for copper conductors only.

1SNK164033S0201

5

1SNK164028V0014

ED2.5-22

ED2.5-22 end sections

Description

– Compatible with ZD2.5-22 and ZD2.5-22-PE pluggable terminal blocks.

Ordering details

Description	Color	Type	Part Number		Pkg qty	Weight (1 pce) g
2 mm 0.079 in spacing	Dark grey	ED2.5-22	1SNK805917R0000		20	3.64

1SNK160302V0014

EDS4-22

EDS4-22 end sections

Description

– Compatible with ZDS4-22 pluggable terminal block.

Ordering details

Description	Color	Type	Part Number		Pkg qty	Weight (1 pce) g
0.8 mm 0.031 in spacing	Dark grey	EDS4-22	1SNK805911R0000		20	1.85

Main technical data

Material specifications	Insulating material	Polyamide	
	Flammability	V0	
	NF F 16 101	I2F2	
Ambient temperature min/max	Service IEC 60068-2-1	-55 ... +110 °C	-67 ... +230 °C
	Storage	-55 ... +110 °C	-67 ... +230 °C
	Installing	-5 ... +40 °C	+23 ... +104 °C

All the main technical data provided are "manufacturer" values.

RoHS
RoHS

Technical data valid for copper conductors only.

1SNK164034S0201

COP

COP coding pegs

Description

– The coding pegs prevent plugs to be inserted into the wrong circuit.

Ordering details

Description	Color	Type	Part Number		Pkg qty	Weight (1 pce) g
	Dark grey	COP-ZD	1SNK900636R0000		10	3.57

Main technical data

Material specifications	Insulating material	Polyamide	
	Flammability	V0	
	NF F 16 101	I2F2	
Ambient temperature min/max	Service IEC 60068-2-1	-55 ... +110 °C	-67 ... +230 °F
	Storage	-55 ... +110 °C	-67 ... +230 °F
	Installing	-5 ... +40 °C	+23 ... +104 °F

All the main technical data provided are "manufacturer" values.

RoHS
RoHS

Mounting instructions

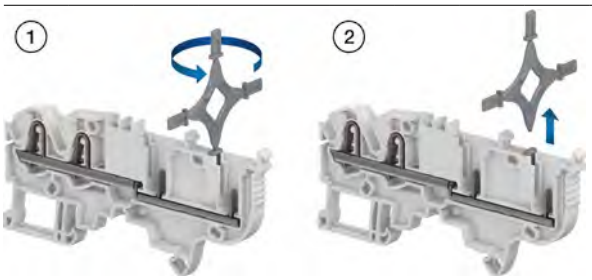

VR

9.4 mm 0.370 in spacing

VR locking devices

Description

– Automatic locking providing excellent plug withstand in case of accidental pulling,
– Lock safely one or two CDK or CDS plugs on ZDK and ZDS pluggable terminal blocks,
– Install one VR... up to 8 poles plugs assembly and two VR... up to 15 poles assembly.

Ordering details

Description	Color	Type	Part Number		Pkg qty	Weight (1 pce) g
9.4 mm 0.370 in spacing	Black	VR-ZD	1SNK900637R0000		50	6.5

Main technical data

Material specifications	Insulating material	Polyacetal	
	Flammability	HB	
	NF F 16 101		
Ambient temperature min/max	Service IEC 60068-2-1	-55 ... +110 °C	-67 ... +230 °F
	Storage	-55 ... +110 °C	-67 ... +230 °F
	Installing	-5 ... +40 °C	+23 ... +104 °F

All the main technical data provided are "manufacturer" values.

RoHS
RoHS

Mounting instructions

1SNK164009S0201

Technical data valid for copper conductors only.

SNK series, marking solutions

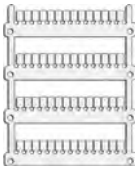

Selection guide		238-239
MG3 thermal transfer printer		240-241
AMS 600 and AMS 250 plotter		242-243

Terminal block markers

5.2 mm 0.205 in spacing

MC512, MG-CPM-13	Blank card in polycarbonate	244
MC512PA	Blank card in polyamide	245
	Pre-printed marker card for horizontal terminal block assembly	246-247
	Pre-printed marker card for vertical terminal block assembly	248-249

6 mm 0.236 in spacing

MC612, MG-CPM-13	Blank card in polycarbonate	250
MC612PA	Blank card in polyamide	251
	Pre-printed marker card for horizontal terminal block assembly	252-253
	Pre-printed marker card for vertical terminal block assembly	254

8 mm 0.315 in spacing

MC812, MC812PA	Blank card	256
MC812PA	Pre-printed marker card for horizontal terminal block assembly	257-258
	Pre-printed marker card for vertical terminal block assembly	259-260

Markers

UMH	Universal wire markers holder	261
MG2-TDMO	Clip-on blank wire marker	261
MG-TAR, MG-TAA	Markers for components	262
MG-TAPW	Markers for components	263
MCLH	Label	264

Marking systems

HTP500	Consumable	265
MG3	Thermal transfer printer	266
AMS	Plotter	267-268

For versatile applications

Marking systems	MG3
Technology	Thermal transfer
Printing mode	Manual
Printing speed	Medium
Printing quality	300 x 600 dpi
1 ribbon or ink cartridge printing capacity	~ 160 000, MG-CPM (5 x 10 mm markers)
Printing color available (monochrome)	Black / Red / Blue / Green / White
Terminal block markers material	Polycarbonate
Terminal block markers	
SNK series terminal blocks blank markers polyamide	–
SNK series terminal blocks blank markers polycarbonate	MG-CPM
SNK series terminal blocks blank markers PVC	MG-CPMF
End stop markers	2 marker types
Other terminal blocks manufacturers blank markers	15 manufacturers
Wires and cables markers	4 marker types
Components and equipment markers	9 marker types

For basic marking applications

	AMS 600 - AMS 250
	Plotter
	Manual
	Low
	300 x 300 dpi
	~ 230 000 markers (with 3 characters per markers)
	Black
	Polyamide
	MC…PA
	–
	–
	4 marker types
	5 manufacturers
	1 marker type
	9 marker types

1SNC160226S0201

The versatile, compact and robust marking system

MARKINGenius® MG3 is a high resolution printer based on thermal transfer technology for producing high quality identification and labelling for terminal blocks, cables and all equipment mounted in electrical panels.

Compact, ergonomic, clean and quiet, MARKINGenius® MG3 may be conveniently located in an office or workshop or easily transported in the field.

Thermal transfer technology uses heat to transfer characters or symbols onto a plastic marker through an ink ribbon. Besides the excellent printing quality, there is no drying time and the markers are instantly usable.
With the MG3 thermal transfer printer, forget about drying times and clogged print head problems.

Combined simplicity, performance and make savings

Facilitate your printing process
Compact design (382 x 230 x 230 mm) facilitates use in workshops or in the field.
Easy to install and use: comprehensive quick-start kit. Intuitive software with easy data import and entry.
Versatile: many different media available: plastic markers, stickers, labels etc.

Save time and consumables
Gain time with a short printing process: 12 seconds cycle. Carriage loading and unloading operation is fast and simple.
Economic: up to 300 000 markers with one ribbon. Partially printed marker card may be reused to avoid wastage.
No drying time: printed markers are immediately ready to use.

Experience quality
High Quality printing: 300 x 600 dpi for image or graphic printing.
Robust: all moving parts are in metal.

High quality printing

Short printing cycle of 12 seconds

Economic: up to 300 000 markers with one ribbon

Many media types available for printing

1SNC160211S0201

The MG3 printer is delivered with a comprehensive set of accessories for getting started quickly

Kit (Part number: 1SNB419001R0000) including:

- 1 Thermal transfer printer
- 1 Software CD
- 1 Power supply cable
- 1 USB cable
- 1 Installation, operating, maintenance and user documentation
- 1 Protective cover
- 1 Ribbon take up spool
- 1 MG2-QTB support plate for terminal block markers (MG-CPM-01, 02, 03, 04, 07)
- 1 MG2-PWC support plate for wire and cable markers (MG-TPM)
- 1 MG2-PLT support plate for wire and cable markers (MG-TPMF) and various labels and signs
- 1 MG2-ETB Support plate for SNK series terminal block markers (MG-CPM-13)
- 1 MG2-ETR Black printing ribbon.

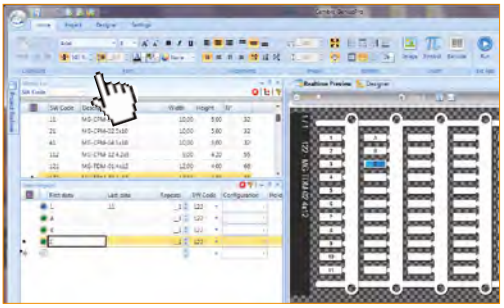

Genius Pro software

The Genius Pro software application benefits from long experience in the field and requires the operator to have only basic skills in order to use it. It is application-oriented and provides fast and easy data entry including a dynamic full-size media preview giving an accurate representation of the current job.

Features / characteristics:

- More than ten types of counter such as *.txt, *.cad, *.dbf, *.xls can be imported
- AutoCAD, Elcad, Spac and Excel import
- MATRIX, ACS and Simplo conversion
- Optimised printing of media for cables, terminal blocks, control gear, connectors, push buttons, components, panels and self-adhesive labels
- Specially developed proprietary Genius font and also Windows fonts
- Designs customised media
- Vector, drawing and clip art printing
- Free upgrades for each new release
- Microsoft® Windows® XP, Windows Vista®, Windows 2000 SP4®, Windows 7®.

1SNC160211S0201

AMS 600

Universal printing plotter

Compatible with all original manufacturer terminal block markers (polyamide), it can also print other identification supports such as: wire and cable markers, push buttons, panels…
This plotter offers a large working area, hosting up to 4 different support plates for one plot job.

Error detection mode

The A3 panel automatically recognises the support plate and avoids the need to select marking elements, it also warns the user when the support is wrongly installed.

Dry out protection system

Pens are prevented from drying out thanks to AMS 600 integrated pen station.

AMS 250

Compact

This A4 plotter is smaller than AMS 600 and is more suited to a cluttered environment.

1SNC160215S0201

Automatic installation

The installation program starts automatically. The computer just needs to be rebooted after it has finished and printing can start.

What you see is what you get !

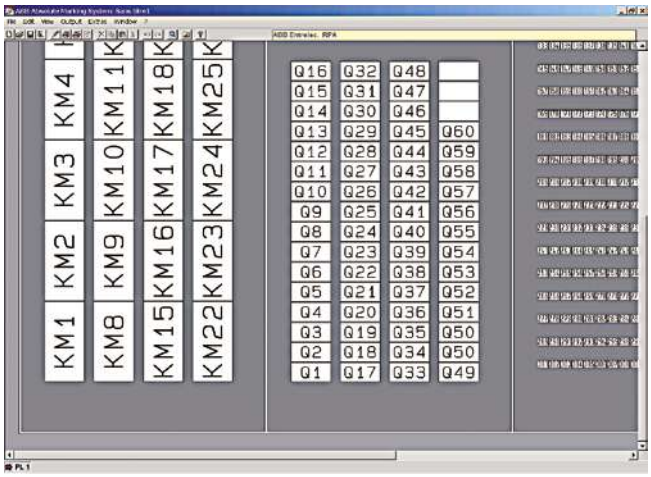

User friendly
Microsoft® Windows® software

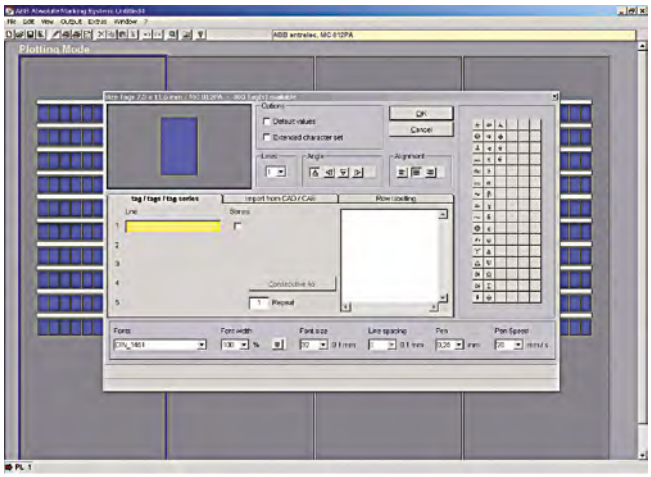

Time saving: data import function
from CAD, TXT and Excel® files

Microsoft, Windows, Excel are trademarks of Microsoft Corporation.

New special ink disposable plotter pens ED-R

- Disposable pens ED-R almost never clog, they are ideal for use in particularly dry environments.
- These pens are filled with the permanent ink ED, most suitable for marking various plastic surfaces.
- The ED ink should only be used on plastic material. Do not clean or touch with aggressive fluids.
- For applications outside of the control panel the ink P 2.0 is more suitable and durable.

1SNC160215S0201

MC512

HTP500-V2

MC512 terminal block markers

Description

- MC512 marker card in polycarbonate for high marking quality, durability and speed when marked with the HTP500 printer,
- Excellent marking durability in the most severe environments,
- Improved marking visibility thanks to the increased marking surface +20% (12 mm 0.472 in).

Main technical data

Material	Flammability	Maximum printed digits				Dimensions	
						mm	inches
Polycarbonate	V0	Horizontal	3	Vertical	8	4.8 x 12	0.189 x 0.472

Ordering details

Description	Number of markers per card	Color	Type	Part Number		Pkg card	Weight (1 pce) g
Blank card	45	White	MC512	1SNK140000R0000		22	9.00
		Yellow	MC512-YL	1SNK140004R0000		22	9.00

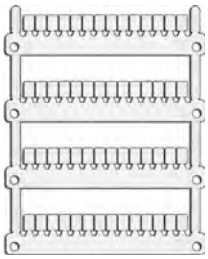

MG-CPM-13

MG3 KIT

MG-CPM-13 terminal block markers

Description

- MG-CPM-13 41790 and 41740 markers are used for marking 5.2 mm 0.205 in spacing SNK terminal blocks,
- Provide an elevate mechanical robustness, high dimensional stability and are halogen free,
- Single application on terminal block,
- 35 cards per packing

Main technical data

Material	Flammability	Maximum printed digits				Dimensions	
						mm	inches
Polycarbonate	V2	Horizontal	3	Vertical	8	4.8 x 12	0.196 x 0.472

Ordering details

Description	Number of markers per card	Color	Type	Part Number		Pkg marker	Weight (1 pce) g
Blank card	56	White	MG-CPM 13 41790	1SNB041790R0512		1960	0.232
		Yellow	MG-CPM 13 41740	1SNB041740R0512		1960	0.232

Marking systems

Description	Type	Part Number		Pkg qty	Weight (1 pce) g
Thermal transfer printer	MG3 KIT	1SNB419001R0000		1	12600.00

Marking systems accessories

Description	Type	Part Number		Pkg qty	Weight (1 pce) g
Support plate for MG-CPM-13	MG2-ETB 991016	1SNB991016R0000		1	100.00

MC512PA

AMS 600

MC512PA terminal block markers

Description

- MC512PA marker card in polyamide to be marked on AMS 600 marking table for medium scale volumes and standard industrial applications,
- Terminal blocks are directly independent after strip mounting,
- Improved marking visibility thanks to the increased marking surface +20% (12 mm 0.472 in).

Main technical data

Material	Flammability	Maximum printed digits				Dimensions	
						mm	inches
Polyamide	V2	Horizontal	3	Vertical	8	4.8 x 12	0.189 x 0.472

Ordering details

Description	Number of markers per card	Color	Type	Part Number		Pkg card	Weight (1 pce) g
Blank card	100	White ☐	MC512PA	1SNK149999R0000		20	10.00

Marking systems

Description	Type	Part Number		Pkg qty	Weight (1 pce) g
AMS plotter	AMS 600 KIT	1SNA360000R2400		1	12600.00

Marking systems accessories

Description	Type	Part Number		Pkg qty	Weight (1 pce) g
Marking support plate for MC PA marker cards (3 MC PA marker cards per plate)	SPRC 30-3	1SNA360039R1700		1	300.00

1SNK160076S0201

MC512PA terminal block markers

Pre-printed marker card for horizontal terminal block assembly

MC512PA

5.2 mm 0.205 in spacing

Description

Save printing time with our large pre-printed cards offer with pre-printed numbers, letters or symbols.

Main technical data

Material	Flammability	Dimensions mm	Dimensions inches
Polyamide	V2	4.8 x 12	0.189 x 0.472

Ordering details

Description	Number of markers per card	Color	Type	Part Number		Pkg card	Weight (1 pce) g
0->9 (x10)	100	White ☐	MC512PA	1SNK140091R0000		1	10.00
1->10 (x10)	100	White ☐	MC512PA	1SNK140011R0000		1	10.00
11->20 (x10)	100	White ☐	MC512PA	1SNK140021R0000		1	10.00
21->30 (x10)	100	White ☐	MC512PA	1SNK140031R0000		1	10.00
31->40 (x10)	100	White ☐	MC512PA	1SNK140041R0000		1	10.00
41->50 (x10)	100	White ☐	MC512PA	1SNK140051R0000		1	10.00
51->60 (x10)	100	White ☐	MC512PA	1SNK140061R0000		1	10.00
61->70 (x10)	100	White ☐	MC512PA	1SNK140071R0000		1	10.00
71->80 (x10)	100	White ☐	MC512PA	1SNK140081R0000		1	10.00
81->90 (x10)	100	White ☐	MC512PA	1SNK140083R0000		1	10.00
91->100 (x10)	100	White ☐	MC512PA	1SNK140101R0000		1	10.00
101->110 (x10)	100	White ☐	MC512PA	1SNK140111R0000		1	10.00
111->120 (x10)	100	White ☐	MC512PA	1SNK140121R0000		1	10.00
121->130 (x10)	100	White ☐	MC512PA	1SNK140131R0000		1	10.00
131->140 (x10)	100	White ☐	MC512PA	1SNK140141R0000		1	10.00
141->150 (x10)	100	White ☐	MC512PA	1SNK140151R0000		1	10.00
151->160 (x10)	100	White ☐	MC512PA	1SNK140161R0000		1	10.00
161->170 (x10)	100	White ☐	MC512PA	1SNK140171R0000		1	10.00
171->180 (x10)	100	White ☐	MC512PA	1SNK140181R0000		1	10.00
181->190 (x10)	100	White ☐	MC512PA	1SNK140191R0000		1	10.00
191->200 (x10)	100	White ☐	MC512PA	1SNK140201R0000		1	10.00
1->100	100	White ☐	MC512PA	1SNK145011R0000		1	10.00
101->200	100	White ☐	MC512PA	1SNK145021R0000		1	10.00
201->300	100	White ☐	MC512PA	1SNK145031R0000		1	10.00
301->400	100	White ☐	MC512PA	1SNK145041R0000		1	10.00
401->500	100	White ☐	MC512PA	1SNK145051R0000		1	10.00
501->600	100	White ☐	MC512PA	1SNK145061R0000		1	10.00
601->700	100	White ☐	MC512PA	1SNK145071R0000		1	10.00
701->800	100	White ☐	MC512PA	1SNK145081R0000		1	10.00
801->900	100	White ☐	MC512PA	1SNK145091R0000		1	10.00
A (x100)	100	White ☐	MC512PA	1SNK146011R0000		1	10.00
B (x100)	100	White ☐	MC512PA	1SNK146021R0000		1	10.00
C (x100)	100	White ☐	MC512PA	1SNK146031R0000		1	10.00
D (x100)	100	White ☐	MC512PA	1SNK146041R0000		1	10.00
E (x100)	100	White ☐	MC512PA	1SNK146051R0000		1	10.00
F (x100)	100	White ☐	MC512PA	1SNK146061R0000		1	10.00
G (x100)	100	White ☐	MC512PA	1SNK146071R0000		1	10.00
H (x100)	100	White ☐	MC512PA	1SNK146081R0000		1	10.00
I (x100)	100	White ☐	MC512PA	1SNK146091R0000		1	10.00
J (x100)	100	White ☐	MC512PA	1SNK146101R0000		1	10.00
K (x100)	100	White ☐	MC512PA	1SNK146111R0000		1	10.00
L (x100)	100	White ☐	MC512PA	1SNK146121R0000		1	10.00
M (x100)	100	White ☐	MC512PA	1SNK146131R0000		1	10.00
N (x100)	100	White ☐	MC512PA	1SNK146141R0000		1	10.00
O (x100)	100	White ☐	MC512PA	1SNK146151R0000		1	10.00
P (x100)	100	White ☐	MC512PA	1SNK146161R0000		1	10.00
Q (x100)	100	White ☐	MC512PA	1SNK146171R0000		1	10.00
R (x100)	100	White ☐	MC512PA	1SNK146181R0000		1	10.00
S (x100)	100	White ☐	MC512PA	1SNK146191R0000		1	10.00
T (x100)	100	White ☐	MC512PA	1SNK146201R0000		1	10.00
U (x100)	100	White ☐	MC512PA	1SNK146211R0000		1	10.00
V (x100)	100	White ☐	MC512PA	1SNK146221R0000		1	10.00
W (x100)	100	White ☐	MC512PA	1SNK146231R0000		1	10.00
X (x100)	100	White ☐	MC512PA	1SNK146241R0000		1	10.00
Y (x100)	100	White ☐	MC512PA	1SNK146251R0000		1	10.00

Continue on next page →

MC512PA terminal block markers

Pre-printed marker card for horizontal terminal block assembly

MC512PA

5.2 mm 0.205 in spacing

Ordering details

Description	Number of markers per card	Color	Type	Part Number		Pkg card	Weight (1 pce) g
← Continuation of previous page							
Z (x100)	100	White	MC512PA	1SNK146261R0000		1	10.00
0 (x100)	100	White	MC512PA	1SNK147001R0000		1	10.00
1 (x100)	100	White	MC512PA	1SNK147011R0000		1	10.00
2 (x100)	100	White	MC512PA	1SNK147021R0000		1	10.00
3 (x100)	100	White	MC512PA	1SNK147031R0000		1	10.00
4 (x100)	100	White	MC512PA	1SNK147041R0000		1	10.00
5 (x100)	100	White	MC512PA	1SNK147051R0000		1	10.00
6 (x100)	100	White	MC512PA	1SNK147061R0000		1	10.00
7 (x100)	100	White	MC512PA	1SNK147071R0000		1	10.00
8 (x100)	100	White	MC512PA	1SNK147081R0000		1	10.00
9 (x100)	100	White	MC512PA	1SNK147091R0000		1	10.00
+ (x100)	100	White	MC512PA	1SNK148001R0000		1	10.00
- (x100)	100	White	MC512PA	1SNK148011R0000		1	10.00
~ (x100)	100	White	MC512PA	1SNK148021R0000		1	10.00
= (x100)	100	White	MC512PA	1SNK148031R0000		1	10.00
⏚ (x100)	100	White	MC512PA	1SNK148041R0000		1	10.00
L1 (x100)	100	White	MC512PA	1SNK148051R0000		1	10.00
L2 (x100)	100	White	MC512PA	1SNK148061R0000		1	10.00
L3 (x100)	100	White	MC512PA	1SNK148071R0000		1	10.00
PE (x100)	100	White	MC512PA	1SNK148091R0000		1	10.00
U1 (x100)	100	White	MC512PA	1SNK148101R0000		1	10.00
U2 (x100)	100	White	MC512PA	1SNK148111R0000		1	10.00
U3 (x100)	100	White	MC512PA	1SNK148121R0000		1	10.00
V1 (x100)	100	White	MC512PA	1SNK148131R0000		1	10.00
V2 (x100)	100	White	MC512PA	1SNK148141R0000		1	10.00
V3 (x100)	100	White	MC512PA	1SNK148151R0000		1	10.00
W1 (x100)	100	White	MC512PA	1SNK148161R0000		1	10.00
W2 (x100)	100	White	MC512PA	1SNK148171R0000		1	10.00
W3 (x100)	100	White	MC512PA	1SNK148181R0000		1	10.00
L1-L2-L3-N-PE (x20)	100	White	MC512PA	1SNK149001R0000		1	10.00
U1-U2-U3-V1-V2-V3-W1-W2-W3 (x10) + U1 (x10)	100	White	MC512PA	1SNK149011R0000		1	10.00

1SNK160004S0201 - Rev. A

MC512PA terminal block markers

Pre-printed marker card for vertical terminal block assembly

MC512PA

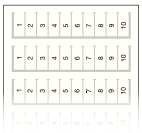

5.2 mm 0.205 in spacing

Description

Save printing time with our large pre-printed cards offer with pre-printed numbers, letters or symbols.

Main technical data

Material	Flammability	Dimensions mm	Dimensions inches
Polyamide	V2	4.8 x 12	0.189 x 0.472

Ordering details

Description	Number of markers per card	Color	Type	Part Number		Pkg card	Weight (1 pce) g
0->9 (x10)	100	White ☐	MC512PA	1SNK140092R0000		1	10.00
1->10 (x10)	100	White ☐	MC512PA	1SNK140012R0000		1	10.00
11->20 (x10)	100	White ☐	MC512PA	1SNK140022R0000		1	10.00
21->30 (x10)	100	White ☐	MC512PA	1SNK140032R0000		1	10.00
31->40 (x10)	100	White ☐	MC512PA	1SNK140042R0000		1	10.00
41->50 (x10)	100	White ☐	MC512PA	1SNK140052R0000		1	10.00
51->60 (x10)	100	White ☐	MC512PA	1SNK140062R0000		1	10.00
61->70 (x10)	100	White ☐	MC512PA	1SNK140072R0000		1	10.00
71->80 (x10)	100	White ☐	MC512PA	1SNK140082R0000		1	10.00
81->90 (x10)	100	White ☐	MC512PA	1SNK140084R0000		1	10.00
91->100 (x10)	100	White ☐	MC512PA	1SNK140102R0000		1	10.00
101->110 (x10)	100	White ☐	MC512PA	1SNK140112R0000		1	10.00
111->120 (x10)	100	White ☐	MC512PA	1SNK140122R0000		1	10.00
121->130 (x10)	100	White ☐	MC512PA	1SNK140132R0000		1	10.00
131->140 (x10)	100	White ☐	MC512PA	1SNK140142R0000		1	10.00
141->150 (x10)	100	White ☐	MC512PA	1SNK140152R0000		1	10.00
151->160 (x10)	100	White ☐	MC512PA	1SNK140162R0000		1	10.00
161->170 (x10)	100	White ☐	MC512PA	1SNK140172R0000		1	10.00
171->180 (x10)	100	White ☐	MC512PA	1SNK140182R0000		1	10.00
181->190 (x10)	100	White ☐	MC512PA	1SNK140192R0000		1	10.00
191->200 (x10)	100	White ☐	MC512PA	1SNK140202R0000		1	10.00
1->100	100	White ☐	MC512PA	1SNK145012R0000		1	10.00
101->200	100	White ☐	MC512PA	1SNK145022R0000		1	10.00
201->300	100	White ☐	MC512PA	1SNK145032R0000		1	10.00
301->400	100	White ☐	MC512PA	1SNK145042R0000		1	10.00
401->500	100	White ☐	MC512PA	1SNK145052R0000		1	10.00
501->600	100	White ☐	MC512PA	1SNK145062R0000		1	10.00
601->700	100	White ☐	MC512PA	1SNK145072R0000		1	10.00
701->800	100	White ☐	MC512PA	1SNK145082R0000		1	10.00
801->900	100	White ☐	MC512PA	1SNK145092R0000		1	10.00
901->1000	100	White ☐	MC512PA	1SNK145102R0000		1	10.00
A (x100)	100	White ☐	MC512PA	1SNK146012R0000		1	10.00
B (x100)	100	White ☐	MC512PA	1SNK146022R0000		1	10.00
C (x100)	100	White ☐	MC512PA	1SNK146032R0000		1	10.00
D (x100)	100	White ☐	MC512PA	1SNK146042R0000		1	10.00
E (x100)	100	White ☐	MC512PA	1SNK146052R0000		1	10.00
F (x100)	100	White ☐	MC512PA	1SNK146062R0000		1	10.00
G (x100)	100	White ☐	MC512PA	1SNK146072R0000		1	10.00
H (x100)	100	White ☐	MC512PA	1SNK146082R0000		1	10.00
I (x100)	100	White ☐	MC512PA	1SNK146092R0000		1	10.00
J (x100)	100	White ☐	MC512PA	1SNK146102R0000		1	10.00
K (x100)	100	White ☐	MC512PA	1SNK146112R0000		1	10.00
L (x100)	100	White ☐	MC512PA	1SNK146122R0000		1	10.00
M (x100)	100	White ☐	MC512PA	1SNK146132R0000		1	10.00
N (x100)	100	White ☐	MC512PA	1SNK146142R0000		1	10.00
O (x100)	100	White ☐	MC512PA	1SNK146152R0000		1	10.00
P (x100)	100	White ☐	MC512PA	1SNK146162R0000		1	10.00
Q (x100)	100	White ☐	MC512PA	1SNK146172R0000		1	10.00
R (x100)	100	White ☐	MC512PA	1SNK146182R0000		1	10.00
S (x100)	100	White ☐	MC512PA	1SNK146192R0000		1	10.00
T (x100)	100	White ☐	MC512PA	1SNK146202R0000		1	10.00
U (x100)	100	White ☐	MC512PA	1SNK146212R0000		1	10.00
V (x100)	100	White ☐	MC512PA	1SNK146222R0000		1	10.00

Continue on next page →

MC512PA terminal block markers

Pre-printed marker card for vertical terminal block assembly

MC512PA

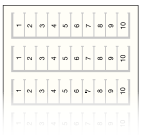

5.2 mm 0.205 in spacing

Ordering details

Description	Number of markers per card	Color	Type	Part Number		Pkg card	Weight (1 pce) g
← Continuation of previous page							
W (x100)	100	White	MC512PA	1SNK146232R0000		1	10.00
X (x100)	100	White	MC512PA	1SNK146242R0000		1	10.00
Y (x100)	100	White	MC512PA	1SNK146252R0000		1	10.00
Z (x100)	100	White	MC512PA	1SNK146262R0000		1	10.00
0 (x100)	100	White	MC512PA	1SNK147002R0000		1	10.00
1 (x100)	100	White	MC512PA	1SNK147012R0000		1	10.00
2 (x100)	100	White	MC512PA	1SNK147022R0000		1	10.00
3 (x100)	100	White	MC512PA	1SNK147032R0000		1	10.00
4 (x100)	100	White	MC512PA	1SNK147042R0000		1	10.00
5 (x100)	100	White	MC512PA	1SNK147052R0000		1	10.00
6 (x100)	100	White	MC512PA	1SNK147062R0000		1	10.00
7 (x100)	100	White	MC512PA	1SNK147072R0000		1	10.00
8 (x100)	100	White	MC512PA	1SNK147082R0000		1	10.00
9 (x100)	100	White	MC512PA	1SNK147092R0000		1	10.00
+ (x100)	100	White	MC512PA	1SNK148002R0000		1	10.00
- (x100)	100	White	MC512PA	1SNK148012R0000		1	10.00
~ (x100)	100	White	MC512PA	1SNK148022R0000		1	10.00
= (x100)	100	White	MC512PA	1SNK148032R0000		1	10.00
⏚ (x100)	100	White	MC512PA	1SNK148042R0000		1	10.00
L1 (x100)	100	White	MC512PA	1SNK148052R0000		1	10.00
L2 (x100)	100	White	MC512PA	1SNK148062R0000		1	10.00
L3 (x100)	100	White	MC512PA	1SNK148072R0000		1	10.00
PE (x100)	100	White	MC512PA	1SNK148092R0000		1	10.00
U1 (x100)	100	White	MC512PA	1SNK148102R0000		1	10.00
U2 (x100)	100	White	MC512PA	1SNK148112R0000		1	10.00
U3 (x100)	100	White	MC512PA	1SNK148122R0000		1	10.00
V1 (x100)	100	White	MC512PA	1SNK148132R0000		1	10.00
V2 (x100)	100	White	MC512PA	1SNK148142R0000		1	10.00
V3 (x100)	100	White	MC512PA	1SNK148152R0000		1	10.00
W1 (x100)	100	White	MC512PA	1SNK148162R0000		1	10.00
W2 (x100)	100	White	MC512PA	1SNK148172R0000		1	10.00
W3 (x100)	100	White	MC512PA	1SNK148182R0000		1	10.00
+24V (x100)	100	White	MC512PA	1SNK148192R0000		1	10.00
+48V (x100)	100	White	MC512PA	1SNK148202R0000		1	10.00
-24V (x100)	100	White	MC512PA	1SNK148212R0000		1	10.00
-48V (x100)	100	White	MC512PA	1SNK148222R0000		1	10.00
L1-L2-L3-N-PE (x20)	100	White	MC512PA	1SNK149002R0000		1	10.00
U1-U2-U3-V1-V2-V3-W1-W2-W3 (x10) + U1 (x10)	100	White	MC512PA	1SNK149012R0000		1	10.00

1SNK160005S0201 - Rev. A

MC612

HTP500-V2

MC612 terminal block markers

Description

- MC612 marker card in polycarbonate for high marking quality, durability and speed when marked with the HTP500 printer,
- Excellent marking durability in the most severe environments,
- Improved marking visibility thanks to the increased marking surface +20% (12 mm 0.472 in).

Main technical data

Material	Flammability	Maximum printed digits				Dimensions mm	Dimensions inches
Polycarbonate	V0	Horizontal	3	Vertical	8	5.6 x 12	0.220 x 0.472

Ordering details

Description	Number of markers per card	Color	Type	Part number		Pkg card	Weight (1 pce) g
Blank card	39	White	MC612	1SNK150000R0000		22	10.00
		Yellow	MC612-YL	1SNK150004R0000		22	10.00

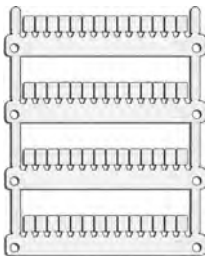

MG-CPM-13

MG3 KIT

MG-CPM-13 terminal block markers

Description

- MG-CPM-13 41791 and 41741 markers are used for marking 6 mm 0.236 in spacing SNK terminal blocks,
- Provide an elevate mechanical robustness, high dimensional stability and are halogen free,
- Single application on terminal block,
- 35 cards per packing.

Main technical data

Material	Flammability	Maximum printed digits				Dimensions mm	Dimensions inches
Polycarbonate	V0	Horizontal	3	Vertical	8	5.6 x 12	0.236 x 0.472

Ordering details

Description	Number of markers per card	Color	Type	Part number		Pkg marker	Weight (1 pce) g
Blank card	48	White	MG-CPM 13 41791	1SNB041791R0612		1680	0.273
		Yellow	MG-CPM 13 41741	1SNB041741R0612		1680	0.273

Marking systems

Description	Type	Part number		Pkg qty	Weight (1 pce) g
Thermal transfer printer	MG3 KIT	1SNB419001R0000		1	12600.00

Marking systems accessories

Description	Type	Part number		Pkg qty	Weight (1 pce) g
Support plate for MG-CPM-13	MG2-ETB 991016	1SNB991016R0000		1	100.00

MC612

AMS 600

MC612PA terminal block markers

Description

- MC612PA marker card in polyamide to be marked on AMS 600 marking table for medium scale volumes and standard industrial applications,
- Terminal blocks are directly independent after strip mounting,
- Improved marking visibility thanks to the increased marking surface +20% (12 mm 0.472 in).

Main technical data

Material	Flammability	Maximum printed digits				Dimensions	
						mm	inches
Polyamide	V2	Horizontal	3	Vertical	8	5.6 x 12	0.220 x 0.472

Ordering details

Description	Number of markers per card	Color	Type	Part Number		Pkg card	Weight (1 pce) g
Blank card	100	White ☐	MC612PA	1SNK159999R0000		20	11.00

Marking systems

Description	Type	Part Number		Pkg qty	Weight (1 pce) g
AMS plotter	AMS 600 KIT	1SNA360000R2400		1	12600.00

Marking systems accessories

Description	Type	Part Number		Pkg qty	Weight (1 pce) g
Marking support plate for MC PA marker cards (3 MC PA marker cards per plate)	SPRC 30-3	1SNA360039R1700		1	300.00

1SNK160077S0201

MC612PA terminal block markers

Pre-printed marker card for horizontal terminal block assembly

MC612PA

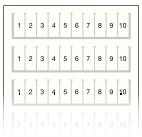

6 mm 0.236 in spacing

Description

Save printing time with our large pre-printed cards offer with pre-printed numbers, letters or symbols.

Main technical data

Material	Flammability	Dimensions mm	Dimensions inches
Polyamide	V2	5.6 x 12	0.220 x 0.472

Ordering details

Description	Number of markers per card	Color	Type	Part Number		Pkg card	Weight (1 pce) g
0->9 (x10)	100	White ☐	MC612PA	1SNK150091R0000		1	11.00
1->10 (x10)	100	White ☐	MC612PA	1SNK150011R0000		1	11.00
11->20 (x10)	100	White ☐	MC612PA	1SNK150021R0000		1	11.00
21->30 (x10)	100	White ☐	MC612PA	1SNK150031R0000		1	11.00
31->40 (x10)	100	White ☐	MC612PA	1SNK150041R0000		1	11.00
41->50 (x10)	100	White ☐	MC612PA	1SNK150051R0000		1	11.00
51->60 (x10)	100	White ☐	MC612PA	1SNK150061R0000		1	11.00
61->70 (x10)	100	White ☐	MC612PA	1SNK150071R0000		1	11.00
71->80 (x10)	100	White ☐	MC612PA	1SNK150081R0000		1	11.00
81->90 (x10)	100	White ☐	MC612PA	1SNK150083R0000		1	11.00
91->100 (x10)	100	White ☐	MC612PA	1SNK150101R0000		1	11.00
101->110 (x10)	100	White ☐	MC612PA	1SNK150111R0000		1	11.00
111->120 (x10)	100	White ☐	MC612PA	1SNK150121R0000		1	11.00
121->130 (x10)	100	White ☐	MC612PA	1SNK150131R0000		1	11.00
131->140 (x10)	100	White ☐	MC612PA	1SNK150141R0000		1	11.00
141->150 (x10)	100	White ☐	MC612PA	1SNK150151R0000		1	11.00
151->160 (x10)	100	White ☐	MC612PA	1SNK150161R0000		1	11.00
161->170 (x10)	100	White ☐	MC612PA	1SNK150171R0000		1	11.00
171->180 (x10)	100	White ☐	MC612PA	1SNK150181R0000		1	11.00
181->190 (x10)	100	White ☐	MC612PA	1SNK150191R0000		1	11.00
191->200 (x10)	100	White ☐	MC612PA	1SNK150201R0000		1	11.00
1->100	100	White ☐	MC612PA	1SNK155011R0000		1	11.00
101->200	100	White ☐	MC612PA	1SNK155021R0000		1	11.00
201->300	100	White ☐	MC612PA	1SNK155031R0000		1	11.00
301->400	100	White ☐	MC612PA	1SNK155041R0000		1	11.00
401->500	100	White ☐	MC612PA	1SNK155051R0000		1	11.00
501->600	100	White ☐	MC612PA	1SNK155061R0000		1	11.00
601->700	100	White ☐	MC612PA	1SNK155071R0000		1	11.00
701->800	100	White ☐	MC612PA	1SNK155081R0000		1	11.00
801->900	100	White ☐	MC612PA	1SNK155091R0000		1	11.00
A (x100)	100	White ☐	MC612PA	1SNK156011R0000		1	11.00
B (x100)	100	White ☐	MC612PA	1SNK156021R0000		1	11.00
C (x100)	100	White ☐	MC612PA	1SNK156031R0000		1	11.00
D (x100)	100	White ☐	MC612PA	1SNK156041R0000		1	11.00
E (x100)	100	White ☐	MC612PA	1SNK156051R0000		1	11.00
F (x100)	100	White ☐	MC612PA	1SNK156061R0000		1	11.00
G (x100)	100	White ☐	MC612PA	1SNK156071R0000		1	11.00
H (x100)	100	White ☐	MC612PA	1SNK156081R0000		1	11.00
I (x100)	100	White ☐	MC612PA	1SNK156091R0000		1	11.00
J (x100)	100	White ☐	MC612PA	1SNK156101R0000		1	11.00
K (x100)	100	White ☐	MC612PA	1SNK156111R0000		1	11.00
L (x100)	100	White ☐	MC612PA	1SNK156121R0000		1	11.00
M (x100)	100	White ☐	MC612PA	1SNK156131R0000		1	11.00
N (x100)	100	White ☐	MC612PA	1SNK156141R0000		1	11.00
O (x100)	100	White ☐	MC612PA	1SNK156151R0000		1	11.00
P (x100)	100	White ☐	MC612PA	1SNK156161R0000		1	11.00
Q (x100)	100	White ☐	MC612PA	1SNK156171R0000		1	11.00
R (x100)	100	White ☐	MC612PA	1SNK156181R0000		1	11.00
S (x100)	100	White ☐	MC612PA	1SNK156191R0000		1	11.00
T (x100)	100	White ☐	MC612PA	1SNK156201R0000		1	11.00
U (x100)	100	White ☐	MC612PA	1SNK156211R0000		1	11.00
V (x100)	100	White ☐	MC612PA	1SNK156221R0000		1	11.00
W (x100)	100	White ☐	MC612PA	1SNK156231R0000		1	11.00

Continue on next page →

MC612PA terminal block markers

Pre-printed marker card for horizontal terminal block assembly

MC612PA

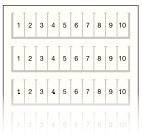

6 mm 0.236 in spacing

Ordering details

Description	Number of markers per card	Color	Type	Part Number		Pkg card	Weight (1 pce) g
← Continuation of previous page							
X (x100)	100	White ☐	MC612PA	1SNK156241R0000		1	11.00
Y (x100)	100	White ☐	MC612PA	1SNK156251R0000		1	11.00
Z (x100)	100	White ☐	MC612PA	1SNK156261R0000		1	11.00
0 (x100)	100	White ☐	MC612PA	1SNK157001R0000		1	11.00
1 (x100)	100	White ☐	MC612PA	1SNK157011R0000		1	11.00
2 (x100)	100	White ☐	MC612PA	1SNK157021R0000		1	11.00
3 (x100)	100	White ☐	MC612PA	1SNK157031R0000		1	11.00
4 (x100)	100	White ☐	MC612PA	1SNK157041R0000		1	11.00
5 (x100)	100	White ☐	MC612PA	1SNK157051R0000		1	11.00
6 (x100)	100	White ☐	MC612PA	1SNK157061R0000		1	11.00
7 (x100)	100	White ☐	MC612PA	1SNK157071R0000		1	11.00
8 (x100)	100	White ☐	MC612PA	1SNK157081R0000		1	11.00
9 (x100)	100	White ☐	MC612PA	1SNK157091R0000		1	11.00
+ (x100)	100	White ☐	MC612PA	1SNK158001R0000		1	11.00
- (x100)	100	White ☐	MC612PA	1SNK158011R0000		1	11.00
~ (x100)	100	White ☐	MC612PA	1SNK158021R0000		1	11.00
= (x100)	100	White ☐	MC612PA	1SNK158031R0000		1	11.00
Ground (x100)	100	White ☐	MC612PA	1SNK158041R0000		1	11.00
L1 (x100)	100	White ☐	MC612PA	1SNK158051R0000		1	11.00
L2 (x100)	100	White ☐	MC612PA	1SNK158061R0000		1	11.00
L3 (x100)	100	White ☐	MC612PA	1SNK158071R0000		1	11.00
PE (x100)	100	White ☐	MC612PA	1SNK158091R0000		1	11.00
U1 (x100)	100	White ☐	MC612PA	1SNK158101R0000		1	11.00
U2 (x100)	100	White ☐	MC612PA	1SNK158111R0000		1	11.00
U3 (x100)	100	White ☐	MC612PA	1SNK158121R0000		1	11.00
V1 (x100)	100	White ☐	MC612PA	1SNK158131R0000		1	11.00
V2 (x100)	100	White ☐	MC612PA	1SNK158141R0000		1	11.00
V3 (x100)	100	White ☐	MC612PA	1SNK158151R0000		1	11.00
W1 (x100)	100	White ☐	MC612PA	1SNK158161R0000		1	11.00
W2 (x100)	100	White ☐	MC612PA	1SNK158171R0000		1	11.00
W3 (x100)	100	White ☐	MC612PA	1SNK158181R0000		1	11.00
L1-L2-L3-N-PE (x20)	100	White ☐	MC612PA	1SNK159001R0000		1	11.00
U1-U2-U3-V1-V2-V3-W1-W2-W3 (x10) + U1 (x10)	100	White ☐	MC612PA	1SNK159011R0000		1	11.00

1SNK160007S0201 - Rev. A

MC612PA terminal block markers

Pre-printed marker card for vertical terminal block assembly

MC612PA

6 mm 0.236 in spacing

Description

Save printing time with our large pre-printed cards offer with pre-printed numbers, letters or symbols.

Main technical data

Material	Flammability	Dimensions mm	Dimensions inches
Polyamide	V2	5.6 x 12	0.220 x 0.472

Ordering details

Description	Number of markers per card	Color	Type	Part Number	Pkg card	Weight (1 pce) g
0->9 (x10)	100	White	MC612PA	1SNK150092R0000	1	11.00
1->10 (x10)	100	White	MC612PA	1SNK150012R0000	1	11.00
11->20 (x10)	100	White	MC612PA	1SNK150022R0000	1	11.00
21->30 (x10)	100	White	MC612PA	1SNK150032R0000	1	11.00
31->40 (x10)	100	White	MC612PA	1SNK150042R0000	1	11.00
41->50 (x10)	100	White	MC612PA	1SNK150052R0000	1	11.00
51->60 (x10)	100	White	MC612PA	1SNK150062R0000	1	11.00
61->70 (x10)	100	White	MC612PA	1SNK150072R0000	1	11.00
71->80 (x10)	100	White	MC612PA	1SNK150082R0000	1	11.00
81->90 (x10)	100	White	MC612PA	1SNK150084R0000	1	11.00
91->100 (x10)	100	White	MC612PA	1SNK150102R0000	1	11.00
101->110 (x10)	100	White	MC612PA	1SNK150112R0000	1	11.00
111->120 (x10)	100	White	MC612PA	1SNK150122R0000	1	11.00
121->130 (x10)	100	White	MC612PA	1SNK150132R0000	1	11.00
131->140 (x10)	100	White	MC612PA	1SNK150142R0000	1	11.00
141->150 (x10)	100	White	MC612PA	1SNK150152R0000	1	11.00
151->160 (x10)	100	White	MC612PA	1SNK150162R0000	1	11.00
161->170 (x10)	100	White	MC612PA	1SNK150172R0000	1	11.00
171->180 (x10)	100	White	MC612PA	1SNK150182R0000	1	11.00
181->190 (x10)	100	White	MC612PA	1SNK150192R0000	1	11.00
191->200 (x10)	100	White	MC612PA	1SNK150202R0000	1	11.00
1->100	100	White	MC612PA	1SNK155012R0000	1	11.00
101->200	100	White	MC612PA	1SNK155022R0000	1	11.00
201->300	100	White	MC612PA	1SNK155032R0000	1	11.00
301->400	100	White	MC612PA	1SNK155042R0000	1	11.00
401->500	100	White	MC612PA	1SNK155052R0000	1	11.00
501->600	100	White	MC612PA	1SNK155062R0000	1	11.00
601->700	100	White	MC612PA	1SNK155072R0000	1	11.00
701->800	100	White	MC612PA	1SNK155082R0000	1	11.00
801->900	100	White	MC612PA	1SNK155092R0000	1	11.00
901->1000	100	White	MC612PA	1SNK155102R0000	1	11.00
A (x100)	100	White	MC612PA	1SNK156012R0000	1	11.00
B (x100)	100	White	MC612PA	1SNK156022R0000	1	11.00
C (x100)	100	White	MC612PA	1SNK156032R0000	1	11.00
D (x100)	100	White	MC612PA	1SNK156042R0000	1	11.00
E (x100)	100	White	MC612PA	1SNK156052R0000	1	11.00
F (x100)	100	White	MC612PA	1SNK156062R0000	1	11.00
G (x100)	100	White	MC612PA	1SNK156072R0000	1	11.00
H (x100)	100	White	MC612PA	1SNK156082R0000	1	11.00
I (x100)	100	White	MC612PA	1SNK156092R0000	1	11.00
J (x100)	100	White	MC612PA	1SNK156102R0000	1	11.00
K (x100)	100	White	MC612PA	1SNK156112R0000	1	11.00
L (x100)	100	White	MC612PA	1SNK156122R0000	1	11.00
M (x100)	100	White	MC612PA	1SNK156132R0000	1	11.00
N (x100)	100	White	MC612PA	1SNK156142R0000	1	11.00
O (x100)	100	White	MC612PA	1SNK156152R0000	1	11.00
P (x100)	100	White	MC612PA	1SNK156162R0000	1	11.00
Q (x100)	100	White	MC612PA	1SNK156172R0000	1	11.00
R (x100)	100	White	MC612PA	1SNK156182R0000	1	11.00
S (x100)	100	White	MC612PA	1SNK156192R0000	1	11.00
T (x100)	100	White	MC612PA	1SNK156202R0000	1	11.00
U (x100)	100	White	MC612PA	1SNK156212R0000	1	11.00
V (x100)	100	White	MC612PA	1SNK156222R0000	1	11.00
W (x100)	100	White	MC612PA	1SNK156232R0000	1	11.00
X (x100)	100	White	MC612PA	1SNK156242R0000	1	11.00

Continue on next page →

MC612PA terminal block markers

Pre-printed marker card for vertical terminal block assembly

MC612PA

6 mm 0.236 in spacing

Ordering details

Description	Number of markers per card	Color	Type	Part Number		Pkg card	Weight (1 pce) g
← Continuation of previous page							
Y (x100)	100	White	MC612PA	1SNK156252R0000		1	11.00
Z (x100)	100	White	MC612PA	1SNK156262R0000		1	11.00
0 (x100)	100	White	MC612PA	1SNK157002R0000		1	11.00
1 (x100)	100	White	MC612PA	1SNK157012R0000		1	11.00
2 (x100)	100	White	MC612PA	1SNK157022R0000		1	11.00
3 (x100)	100	White	MC612PA	1SNK157032R0000		1	11.00
4 (x100)	100	White	MC612PA	1SNK157042R0000		1	11.00
5 (x100)	100	White	MC612PA	1SNK157052R0000		1	11.00
6 (x100)	100	White	MC612PA	1SNK157062R0000		1	11.00
7 (x100)	100	White	MC612PA	1SNK157072R0000		1	11.00
8 (x100)	100	White	MC612PA	1SNK157082R0000		1	11.00
9 (x100)	100	White	MC612PA	1SNK157092R0000		1	11.00
+ (x100)	100	White	MC612PA	1SNK158002R0000		1	11.00
- (x100)	100	White	MC612PA	1SNK158012R0000		1	11.00
~ (x100)	100	White	MC612PA	1SNK158022R0000		1	11.00
= (x100)	100	White	MC612PA	1SNK158032R0000		1	11.00
⏚ (x100)	100	White	MC612PA	1SNK158042R0000		1	11.00
L1 (x100)	100	White	MC612PA	1SNK158052R0000		1	11.00
L2 (x100)	100	White	MC612PA	1SNK158062R0000		1	11.00
L3 (x100)	100	White	MC612PA	1SNK158072R0000		1	11.00
PE (x100)	100	White	MC612PA	1SNK158092R0000		1	11.00
U1 (x100)	100	White	MC612PA	1SNK158102R0000		1	11.00
U2 (x100)	100	White	MC612PA	1SNK158112R0000		1	11.00
U3 (x100)	100	White	MC612PA	1SNK158122R0000		1	11.00
V1 (x100)	100	White	MC612PA	1SNK158132R0000		1	11.00
V2 (x100)	100	White	MC612PA	1SNK158142R0000		1	11.00
V3 (x100)	100	White	MC612PA	1SNK158152R0000		1	11.00
W1 (x100)	100	White	MC612PA	1SNK158162R0000		1	11.00
W2 (x100)	100	White	MC612PA	1SNK158172R0000		1	11.00
W3 (x100)	100	White	MC612PA	1SNK158182R0000		1	11.00
+24V (x100)	100	White	MC612PA	1SNK158192R0000		1	11.00
+48V (x100)	100	White	MC612PA	1SNK158202R0000		1	11.00
- 24V (x100)	100	White	MC612PA	1SNK158212R0000		1	11.00
-48V (x100)	100	White	MC612PA	1SNK158222R0000		1	11.00
L1-L2-L3-N-PE (x20)	100	White	MC612PA	1SNK159002R0000		1	11.00
U1-U2-U3-V1-V2-V3-W1-W2-W3 (x10) + U1 (x10)	100	White	MC612PA	1SNK159012R0000		1	11.00

1SNK160008S0201 - Rev. A

MC812

HTP500-V2

MC812 terminal block markers

Description

- MC812 marker card in polycarbonate for high marking quality, durability and speed when marked with the HTP500 printer,
- Excellent marking durability in the most severe environments,
- Improved marking visibility thanks to the increased marking surface +20% (12 mm 0.472 in)

Main technical data

Material	Flammability	Maximum printed digits				Dimensions	
						mm	inches
Polycarbonate	V0	Horizontal	4	Vertical	8	7.6 x 12	0.299 x 0.472

Ordering details

Description	Number of markers per card	Color	Type	Part number		Pkg card	Weight (1 pce) g
Blank card	30	White	MC812	1SNK160000R0000		22	10.00
		Yellow	MC812-YL	1SNK160004R0000		22	10.00

MC812PA

AMS 600

MC812PA terminal block markers

Description

- MC812PA marker card in polyamide to be marked on AMS 600 marking table for medium scale volumes and standard industrial applications,
- Terminal blocks are directly independent after strip mounting,
- Improved marking visibility thanks to the increased marking surface +20% (12 mm 0.472 in)

Main technical data

Material	Flammability	Maximum printed digits				Dimensions	
						mm	inches
Polyamide	V2	Horizontal	3	Vertical	8	7.6 x 12	0.299 x 0.472

Ordering details

Description	Number of markers per card	Color	Type	Part number		Pkg card	Weight (1 pce) g
Blank card	100	White	MC812PA	1SNK169999R0000		20	14.00

Marking systems

Description	Type	Part number		Pkg qty	Weight (1 pce) g
AMS plotter	AMS 600 KIT	1SNA360000R2400		1	12600.00

Marking systems accessories

Description	Type	Part number		Pkg qty	Weight (1 pce) g
Marking support plate for MC PA marker cards (3 MC PA marker cards per plate)	SPRC 30-3	1SNA360039R1700		1	300.00

MC812PA terminal block markers

Pre-printed marker card for horizontal terminal block assembly

MC812PA

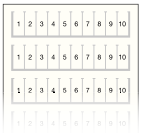

8 mm 0.315 in spacing

Description

Save printing time with our large pre-printed cards offer with pre-printed numbers, letters or symbols.

Main technical data

Material	Flammability	Dimensions mm	Dimensions inches
Polyamide	V2	7.6 x 12	0.299 x 0.472

Ordering details

Description	Number of markers per card	Color	Type	Part Number		Pkg card	Weight (1 pce) g
0->9 (x10)	100	White	MC812PA	1SNK160091R0000		1	14.00
1->10 (x10)	100	White	MC812PA	1SNK160011R0000		1	14.00
11->20 (x10)	100	White	MC812PA	1SNK160021R0000		1	14.00
21->30 (x10)	100	White	MC812PA	1SNK160031R0000		1	14.00
31->40 (x10)	100	White	MC812PA	1SNK160041R0000		1	14.00
41->50 (x10)	100	White	MC812PA	1SNK160051R0000		1	14.00
51->60 (x10)	100	White	MC812PA	1SNK160061R0000		1	14.00
61->70 (x10)	100	White	MC812PA	1SNK160071R0000		1	14.00
71->80 (x10)	100	White	MC812PA	1SNK160081R0000		1	14.00
81->90 (x10)	100	White	MC812PA	1SNK160083R0000		1	14.00
91->100 (x10)	100	White	MC812PA	1SNK160101R0000		1	14.00
101->110 (x10)	100	White	MC812PA	1SNK160111R0000		1	14.00
111->120 (x10)	100	White	MC812PA	1SNK160121R0000		1	14.00
121->130 (x10)	100	White	MC812PA	1SNK160131R0000		1	14.00
131->140 (x10)	100	White	MC812PA	1SNK160141R0000		1	14.00
141->150 (x10)	100	White	MC812PA	1SNK160151R0000		1	14.00
151->160 (x10)	100	White	MC812PA	1SNK160161R0000		1	14.00
161->170 (x10)	100	White	MC812PA	1SNK160171R0000		1	14.00
171->180 (x10)	100	White	MC812PA	1SNK160181R0000		1	14.00
181->190 (x10)	100	White	MC812PA	1SNK160191R0000		1	14.00
191->200 (x10)	100	White	MC812PA	1SNK160201R0000		1	14.00
1->100	100	White	MC812PA	1SNK165011R0000		1	14.00
101->200	100	White	MC812PA	1SNK165021R0000		1	14.00
201->300	100	White	MC812PA	1SNK165031R0000		1	14.00
301->400	100	White	MC812PA	1SNK165041R0000		1	14.00
401->500	100	White	MC812PA	1SNK165051R0000		1	14.00
501->600	100	White	MC812PA	1SNK165061R0000		1	14.00
601->700	100	White	MC812PA	1SNK165071R0000		1	14.00
701->800	100	White	MC812PA	1SNK165081R0000		1	14.00
801->900	100	White	MC812PA	1SNK165091R0000		1	14.00
A (x100)	100	White	MC812PA	1SNK166011R0000		1	14.00
B (x100)	100	White	MC812PA	1SNK166021R0000		1	14.00
C (x100)	100	White	MC812PA	1SNK166031R0000		1	14.00
D (x100)	100	White	MC812PA	1SNK166041R0000		1	14.00
E (x100)	100	White	MC812PA	1SNK166051R0000		1	14.00
F (x100)	100	White	MC812PA	1SNK166061R0000		1	14.00
G (x100)	100	White	MC812PA	1SNK166071R0000		1	14.00
H (x100)	100	White	MC812PA	1SNK166081R0000		1	14.00
I (x100)	100	White	MC812PA	1SNK166091R0000		1	14.00
J (x100)	100	White	MC812PA	1SNK166101R0000		1	14.00
K (x100)	100	White	MC812PA	1SNK166111R0000		1	14.00
L (x100)	100	White	MC812PA	1SNK166121R0000		1	14.00
M (x100)	100	White	MC812PA	1SNK166131R0000		1	14.00
N (x100)	100	White	MC812PA	1SNK166141R0000		1	14.00
O (x100)	100	White	MC812PA	1SNK166151R0000		1	14.00
P (x100)	100	White	MC812PA	1SNK166161R0000		1	14.00
Q (x100)	100	White	MC812PA	1SNK166171R0000		1	14.00
R (x100)	100	White	MC812PA	1SNK166181R0000		1	14.00
S (x100)	100	White	MC812PA	1SNK166191R0000		1	14.00
T (x100)	100	White	MC812PA	1SNK166201R0000		1	14.00
U (x100)	100	White	MC812PA	1SNK166211R0000		1	14.00
V (x100)	100	White	MC812PA	1SNK166221R0000		1	14.00

Continue on next page →

MC812PA terminal block markers

Pre-printed marker card for horizontal terminal block assembly

MC812PA

8 mm 0.315 in spacing

Ordering details

Description	Number of markers per card	Color	Type	Part Number		Pkg card	Weight (1 pce) g
← Continuation of previous page							
W (x100)	100	White ☐	MC812PA	1SNK166231R0000		1	14.00
X (x100)	100	White ☐	MC812PA	1SNK166241R0000		1	14.00
Y (x100)	100	White ☐	MC812PA	1SNK166251R0000		1	14.00
Z (x100)	100	White ☐	MC812PA	1SNK166261R0000		1	14.00
0 (x100)	100	White ☐	MC812PA	1SNK167001R0000		1	14.00
1 (x100)	100	White ☐	MC812PA	1SNK167011R0000		1	14.00
2 (x100)	100	White ☐	MC812PA	1SNK167021R0000		1	14.00
3 (x100)	100	White ☐	MC812PA	1SNK167031R0000		1	14.00
4 (x100)	100	White ☐	MC812PA	1SNK167041R0000		1	14.00
5 (x100)	100	White ☐	MC812PA	1SNK167051R0000		1	14.00
6 (x100)	100	White ☐	MC812PA	1SNK167061R0000		1	14.00
7 (x100)	100	White ☐	MC812PA	1SNK167071R0000		1	14.00
8 (x100)	100	White ☐	MC812PA	1SNK167081R0000		1	14.00
9 (x100)	100	White ☐	MC812PA	1SNK167091R0000		1	14.00
+ (x100)	100	White ☐	MC812PA	1SNK168001R0000		1	14.00
- (x100)	100	White ☐	MC812PA	1SNK168011R0000		1	14.00
~ (x100)	100	White ☐	MC812PA	1SNK168021R0000		1	14.00
= (x100)	100	White ☐	MC812PA	1SNK168031R0000		1	14.00
⏚ (x100)	100	White ☐	MC812PA	1SNK168041R0000		1	14.00
L1 (x100)	100	White ☐	MC812PA	1SNK168051R0000		1	14.00
L2 (x100)	100	White ☐	MC812PA	1SNK168061R0000		1	14.00
L3 (x100)	100	White ☐	MC812PA	1SNK168071R0000		1	14.00
PE (x100)	100	White ☐	MC812PA	1SNK168091R0000		1	14.00
U1 (x100)	100	White ☐	MC812PA	1SNK168101R0000		1	14.00
U2 (x100)	100	White ☐	MC812PA	1SNK168111R0000		1	14.00
U3 (x100)	100	White ☐	MC812PA	1SNK168121R0000		1	14.00
V1 (x100)	100	White ☐	MC812PA	1SNK168131R0000		1	14.00
V2 (x100)	100	White ☐	MC812PA	1SNK168141R0000		1	14.00
V3 (x100)	100	White ☐	MC812PA	1SNK168151R0000		1	14.00
W1 (x100)	100	White ☐	MC812PA	1SNK168161R0000		1	14.00
W2 (x100)	100	White ☐	MC812PA	1SNK168171R0000		1	14.00
W3 (x100)	100	White ☐	MC812PA	1SNK168181R0000		1	14.00
L1-L2-L3-N-PE (x20)	100	White ☐	MC812PA	1SNK169001R0000		1	14.00
U1-U2-U3-V1-V2-V3-W1-W2-W3 (x10) + U1 (x10)	100	White ☐	MC812PA	1SNK169011R0000		1	14.00

MC812PA terminal block markers

Pre-printed marker card for vertical terminal block assembly

MC812PA

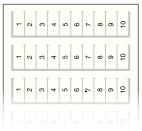

8 mm 0.315 in spacing

Description

Save printing time with our large pre-printed cards offer with pre-printed numbers, letters or symbols.

Main technical data

Material	Flammability	Dimensions mm	Dimensions inches
Polyamide	V2	7.6 x 12	0.299 x 0.472

Ordering details

Description	Number of markers per card	Color	Type	Part Number	Pkg card	Weight (1 pce) g
0->9 (x10)	100	White	MC812PA	1SNK160092R0000	1	14.00
1->10 (x10)	100	White	MC812PA	1SNK160012R0000	1	14.00
11->20 (x10)	100	White	MC812PA	1SNK160022R0000	1	14.00
21->30 (x10)	100	White	MC812PA	1SNK160032R0000	1	14.00
31->40 (x10)	100	White	MC812PA	1SNK160042R0000	1	14.00
41->50 (x10)	100	White	MC812PA	1SNK160052R0000	1	14.00
51->60 (x10)	100	White	MC812PA	1SNK160062R0000	1	14.00
61->70 (x10)	100	White	MC812PA	1SNK160072R0000	1	14.00
71->80 (x10)	100	White	MC812PA	1SNK160082R0000	1	14.00
81->90 (x10)	100	White	MC812PA	1SNK160084R0000	1	14.00
91->100 (x10)	100	White	MC812PA	1SNK160102R0000	1	14.00
101->110 (x10)	100	White	MC812PA	1SNK160112R0000	1	14.00
111->120 (x10)	100	White	MC812PA	1SNK160122R0000	1	14.00
121->130 (x10)	100	White	MC812PA	1SNK160132R0000	1	14.00
131->140 (x10)	100	White	MC812PA	1SNK160142R0000	1	14.00
141->150 (x10)	100	White	MC812PA	1SNK160152R0000	1	14.00
151->160 (x10)	100	White	MC812PA	1SNK160162R0000	1	14.00
161->170 (x10)	100	White	MC812PA	1SNK160172R0000	1	14.00
171->180 (x10)	100	White	MC812PA	1SNK160182R0000	1	14.00
181->190 (x10)	100	White	MC812PA	1SNK160192R0000	1	14.00
191->200 (x10)	100	White	MC812PA	1SNK160202R0000	1	14.00
1->100	100	White	MC812PA	1SNK165012R0000	1	14.00
101->200	100	White	MC812PA	1SNK165022R0000	1	14.00
201->300	100	White	MC812PA	1SNK165032R0000	1	14.00
301->400	100	White	MC812PA	1SNK165042R0000	1	14.00
401->500	100	White	MC812PA	1SNK165052R0000	1	14.00
501->600	100	White	MC812PA	1SNK165062R0000	1	14.00
601->700	100	White	MC812PA	1SNK165072R0000	1	14.00
701->800	100	White	MC812PA	1SNK165082R0000	1	14.00
801->900	100	White	MC812PA	1SNK165092R0000	1	14.00
901->1000	100	White	MC812PA	1SNK165102R0000	1	14.00
A (x100)	100	White	MC812PA	1SNK166012R0000	1	14.00
B (x100)	100	White	MC812PA	1SNK166022R0000	1	14.00
C (x100)	100	White	MC812PA	1SNK166032R0000	1	14.00
D (x100)	100	White	MC812PA	1SNK166042R0000	1	14.00
E (x100)	100	White	MC812PA	1SNK166052R0000	1	14.00
F (x100)	100	White	MC812PA	1SNK166062R0000	1	14.00
G (x100)	100	White	MC812PA	1SNK166072R0000	1	14.00
H (x100)	100	White	MC812PA	1SNK166082R0000	1	14.00
I (x100)	100	White	MC812PA	1SNK166092R0000	1	14.00
J (x100)	100	White	MC812PA	1SNK166102R0000	1	14.00
K (x100)	100	White	MC812PA	1SNK166112R0000	1	14.00
L (x100)	100	White	MC812PA	1SNK166122R0000	1	14.00
M (x100)	100	White	MC812PA	1SNK166132R0000	1	14.00
N (x100)	100	White	MC812PA	1SNK166142R0000	1	14.00
O (x100)	100	White	MC812PA	1SNK166152R0000	1	14.00
P (x100)	100	White	MC812PA	1SNK166162R0000	1	14.00
Q (x100)	100	White	MC812PA	1SNK166172R0000	1	14.00
R (x100)	100	White	MC812PA	1SNK166182R0000	1	14.00
S (x100)	100	White	MC812PA	1SNK166192R0000	1	14.00
T (x100)	100	White	MC812PA	1SNK166202R0000	1	14.00
U (x100)	100	White	MC812PA	1SNK166212R0000	1	14.00
V (x100)	100	White	MC812PA	1SNK166222R0000	1	14.00

Continue on next page →

MC812PA terminal block markers

Pre-printed marker card for vertical terminal block assembly

MC812PA

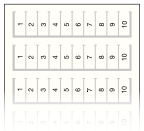

8 mm 0.315 in spacing

Ordering details

Description	Number of markers per card	Color	Type	Part Number		Pkg card	Weight (1 pce) g
← Continuation of previous page							
W (x100)	100	White ☐	MC812PA	1SNK166232R0000		1	14.00
X (x100)	100	White ☐	MC812PA	1SNK166242R0000		1	14.00
Y (x100)	100	White ☐	MC812PA	1SNK166252R0000		1	14.00
Z (x100)	100	White ☐	MC812PA	1SNK166262R0000		1	14.00
0 (x100)	100	White ☐	MC812PA	1SNK167002R0000		1	14.00
1 (x100)	100	White ☐	MC812PA	1SNK167012R0000		1	14.00
2 (x100)	100	White ☐	MC812PA	1SNK167022R0000		1	14.00
3 (x100)	100	White ☐	MC812PA	1SNK167032R0000		1	14.00
4 (x100)	100	White ☐	MC812PA	1SNK167042R0000		1	14.00
5 (x100)	100	White ☐	MC812PA	1SNK167052R0000		1	14.00
6 (x100)	100	White ☐	MC812PA	1SNK167062R0000		1	14.00
7 (x100)	100	White ☐	MC812PA	1SNK167072R0000		1	14.00
8 (x100)	100	White ☐	MC812PA	1SNK167082R0000		1	14.00
9 (x100)	100	White ☐	MC812PA	1SNK167092R0000		1	14.00
+ (x100)	100	White ☐	MC812PA	1SNK168002R0000		1	14.00
- (x100)	100	White ☐	MC812PA	1SNK168012R0000		1	14.00
~ (x100)	100	White ☐	MC812PA	1SNK168022R0000		1	14.00
= (x100)	100	White ☐	MC812PA	1SNK168032R0000		1	14.00
⏚ (x100)	100	White ☐	MC812PA	1SNK168042R0000		1	14.00
L1 (x100)	100	White ☐	MC812PA	1SNK168052R0000		1	14.00
L2 (x100)	100	White ☐	MC812PA	1SNK168062R0000		1	14.00
L3 (x100)	100	White ☐	MC812PA	1SNK168072R0000		1	14.00
PE (x100)	100	White ☐	MC812PA	1SNK168092R0000		1	14.00
U1 (x100)	100	White ☐	MC812PA	1SNK168102R0000		1	14.00
U2 (x100)	100	White ☐	MC812PA	1SNK168112R0000		1	14.00
U3 (x100)	100	White ☐	MC812PA	1SNK168122R0000		1	14.00
V1 (x100)	100	White ☐	MC812PA	1SNK168132R0000		1	14.00
V2 (x100)	100	White ☐	MC812PA	1SNK168142R0000		1	14.00
V3 (x100)	100	White ☐	MC812PA	1SNK168152R0000		1	14.00
W1 (x100)	100	White ☐	MC812PA	1SNK168162R0000		1	14.00
W2 (x100)	100	White ☐	MC812PA	1SNK168172R0000		1	14.00
W3 (x100)	100	White ☐	MC812PA	1SNK168182R0000		1	14.00
+24V (x100)	100	White ☐	MC812PA	1SNK168192R0000		1	14.00
+48V (x100)	100	White ☐	MC812PA	1SNK168202R0000		1	14.00
-24V (x100)	100	White ☐	MC812PA	1SNK168212R0000		1	14.00
-48V (x100)	100	White ☐	MC812PA	1SNK168222R0000		1	14.00
L1-L2-L3-N-PE (x20)	100	White ☐	MC812PA	1SNK169002R0000		1	14.00
U1-U2-U3-V1-V2-V3-W1-W2-W3 (x10) + U1 (x10)	100	White ☐	MC812PA	1SNK169012R0000		1	14.00

5.2 mm 0.205 in spacing

Mounting instructions

Install the UMH on the terminal blocks (strip mounting) and slide on the wire markers.

UMH universal wire markers holder

Description

- Compatible with MG2 - TDMO wire markers and most of the wire markers available on the market (wire markers not supplied with UMH);
- Quickly put it on any SNK terminal blocks and accessories: strip mounting of 10 parts for 5.2 mm 0.205 in spacing, unitary mounting for other spacings.

Ordering details

Description	Color	Type	Part Number		Pkg qty	Weight (1 pce) g
5.2 mm 0.205 in spacing	Grey	UMH	1SNK900611R0000		10	0.20

Main technical data

Material specifications	Insulating material	Polyamide	
	Flammability	V0	
	NF F 16 101	I2F2	
Ambient temperature min/max	Service IEC 60068-2-1	-55 ... +110 °C	-67 ... +230 °F
	Storage	-55 ... +110 °C	-67 ... +230 °F
	Installing	-5 ... +40 °C	-23 ... +104 °F

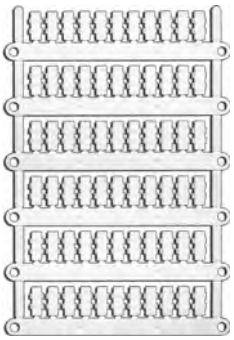

1SNC160118F0014

MG2-TDMO

MG2-TDMO clip-on blank wire marker

Description

- Rigid Polycarbonate marker to be directly printed and snaped on the wire or the UMH wire marker holder,
- Print with support plate MG2-PTM.

Main technical data

Material	Flammability	Temperature range
PC	V0	-40°C ... +140°C, - 22°F ... +176°F

Ordering details

Dimensions mm	Dimensions in	Number of markers per card	Color	Type	Part Number	SW code		Pkg qty	Weight (1 pce) g
MG2-TDMO-01									
4 x 12	0.157 x 0.472	40	White	MG2-TDMO-01 40390	1SNB040390R0412	125		880	0.30
4 x 16	0.157 x 0.630	40	White	MG2-TDMO-01 40391	1SNB040391R0416	128		880	0.30
4 x 12	0.157 x 0.472	40	Yellow	MG2-TDMO-01 40340	1SNB040340R0412	125		800	0.30
4 x 16	0.157 x 0.630	40	Yellow	MG2-TDMO-01 40341	1SNB040341R0416	128		800	0.30
MG2-TDMO-02									
4 x 12	0.157 x 0.472	40	White	MG2-TDMO-02 40490	1SNB040490R0412	126		640	0.40
4 x 16	0.157 x 0.630	40	White	MG2-TDMO-02 40491	1SNB040491R0416	129		640	0.40
4 x 12	0.157 x 0.472	40	Yellow	MG2-TDMO-02 40440	1SNB040440R0412	126		640	0.40
4 x 16	0.157 x 0.630	40	Yellow	MG2-TDMO-02 40441	1SNB040441R0416	129		640	0.40
MG2-TDMO-03									
4 x 12	0.157 x 0.472	40	White	MG2-TDMO-03 40590	1SNB040590R0412	127		560	0.40
4 x 16	0.157 x 0.630	40	White	MG2-TDMO-03 40591	1SNB040591R0416	130		560	0.40
4 x 12	0.157 x 0.472	40	Yellow	MG2-TDMO-03 40540	1SNB040540R0412	127		560	0.40
4 x 16	0.157 x 0.630	40	Yellow	MG2-TDMO-03 40541	1SNB040541R0416	130		560	0.40

Marking system

MG3 KIT	●	AMS 250		AMS 600		HTP500	

Description	Support status	Type	Part Number			Pkg qty	Weight (1 pce) g
Support plate							
Support plate for cable tags MG2-TDMO & MG-TDM 4x16mm	Purchased separately	MG2-PTM 991010	1SNB991010R0000			1	116.00

MG3 KIT

MG-TAR

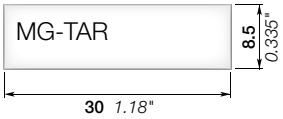

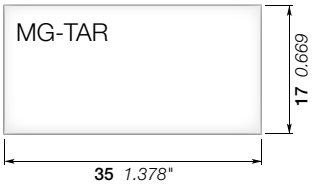

MG-TAR markers for components

Description

Identify your terminal blocks assembly with the precut blank label adapted to the LH label holders.

Ordering details

Description	Nb. of markers per card	Nb. of card by package	Color	Type	Part Number	SW code		Pkg marker	Weight 1 marker g
For LH label holder	33	50	White	MG-TAR 45490	1SNB045490R8530	720		1650	0.371
For LH-R1 label holder	18	50		MG-TAR 45194	1SNB045194R1735	711		900	0.628

Main technical data

Material specifications	Insulating material	Rigid PVC	
	Flammability	V0	
	NF F 16 101		
Ambient temperature min/max	Service IEC 60068-2-1	-30 ... +80 °C	-22 ... +176 °F
	Storage	-30 ... +80 °C	-22 ... +176 °F
	Installing	+10 ... +40 °C	+50 ... +104 °F

MG-TAA

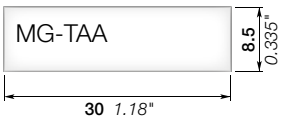

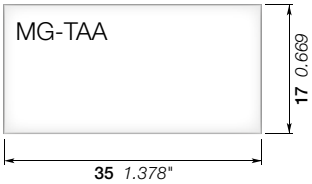

MG-TAA markers for components

Description

Identify your terminal blocks assembly with the self adhesive label adapted to the LH label holders.

Ordering details

Description	Nb. of markers per card	Nb. of card by package	Color	Type	Part Number	SW code		Pkg marker	Weight 1 marker g
For LH label holder	33	25	White	MG-TAA 49498	1SNB049498R8530	33		825	0.55
	33	25	Yellow	MG-TAA 49448	1SNB049448R8530	33		825	0.55
For LH-R1 label holder	18	25	White	MG-TAA 49198	1SNB049198R1735	711		450	0.91
	18	25	Yellow	MG-TAA 49148	1SNB049148R1735	711		450	0.91

Main technical data

Material specifications	Insulating material	Rigid PVC	
	Flammability	V0	
	NF F 16 101		
Ambient temperature min/max	Service IEC 60068-2-1	-30 ... +80 °C	-22 ... +176 °F
	Storage	-30 ... +80 °C	-22 ... +176 °F
	Installing	+10 ... +40 °C	+50 ... +104 °F

Marking system & accessories

Description	Color	Type	Part Number		Pkg qty	Weight (1 pce) g
Thermal transfer printer	Grey	MG3 KIT	1SNB419001R0000		1	12600

1SNK160099S0201

MG-TAPW

MG-TAPW markers for components

Description

Identify your terminal blocks assembly with the precut blank label adapted to the LH label holders.

Ordering details

Description	Nb. of markers per card	Nb. of card by package	Color	Type	Part Number	SW code		Pkg marker	Weight 1 marker g
For LH label holder	30	50	White	MG-TAPW 49096	1SNB049096R0929	363		1500	0.30
	30	50	Yellow	MG-TAPW 49046	1SNB049046R0929	363		1500	0.30

Main technical data

Material specifications	Insulating material	Rigid PVC	
	Flammability	V0	
	NF F 16 101		
Ambient temperature min/max	Service IEC 60068-2-1	-30 ... +80 °C	-22 ... +176 °F
	Storage	-30 ... +80 °C	-22 ... +176 °F
	Installing	+10 ... +40 °C	+50 ... +104 °F

Marking system & accessories

Description	Color	Type	Part Number		Pkg qty	Weight (1 pce) g
Thermal transfer printer	Grey	MG3 KIT	1SNB419001R0000		1	12600

1SNK160100S0201

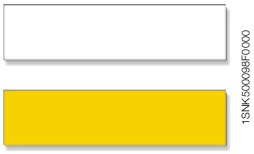

MCLH

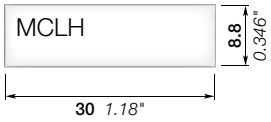

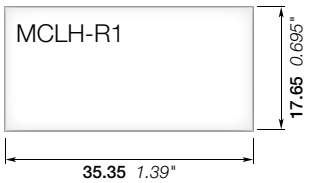

MCLH label

Description

Identify your terminal blocks assembly with the self adhesive label adapted to the LH label holders.

Ordering details

Description	Nb. of markers per card	Nb. of card by package	Color	Type	Part Number	SW code		Pkg card	Weight 1 card g
For LH label holder	36	25	White	MCLH	1SNK900630R0000			25	10.00
			Yellow	MCLH-YL	1SNK900633R0000			25	10.00
For LH-R1 label holder	15	25	White	MCLH-R1	1SNK900631R0000			25	10.00
			Yellow	MCLH-R1-YL	1SNK900634R0000			25	10.00

Main technical data

Material specifications	Insulating material	PVC + adhesive acrylic	
	Flammability	V0	
	NF F 16 101		
Ambient temperature min/max	Service IEC 60068-2-1	-55 ... +110 °C	-67 ... +230 °F
	Storage	-55 ... +110 °C	-67 ... +230 °F
	Installing	-5 ... +40 °C	+23 ... +104 °F

1

2

Marking system & accessories

Description	Color	Type	Part Number		Pkg qty	Weight (1 pce) g
1 Plotter		AMS 600 KIT	1SNA360000R2400		1	12600.00
2 Support plate for AMS		SPRC 21	1SNA360031R0600		1	851.00

Complete list of accessories is indicated in the terminal block datasheet including end stops.
Some accessories such as jumper bars may modify the terminal block's ratings: Complete information available in the accessories section of the catalog.

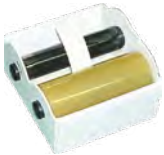

HTP500-CLEAN

HTP500-FEED

HTP500-PL2

RIB-B

Feeders and support plates

Description	Color	Type	Part Number		Pkg qty	Weight (1 pce) g
Universal feeder for marker cards		HTP500-FEED	1SNA235703R0400		1	
Support plate for TE Connectivity terminal block markers		HTP500-PL2	1SNA235705R0600		1	
Universal support plate for wire markers		HTP500-PL	1SNA235704R0500		1	

Accessories

Description	Color	Type	Part Number		Pkg qty	Weight (1 pce) g
Black ribbon cassette		RIB-B	1SNA235710R0600		3	
Red ribbon cassette for identification plates and adhesive labels		RIB-R	1SNA235711R2300		3	
Red ribbon cassette for terminal blocks and wire markers		RIB-RS	1SNA235718R0200		3	
Cleaning cassette		HTP500-CLEAN	1SNA235714R2600		1	
Standard cleaning roll ø18		HTP500-ROLL	1SNA235715R2700		1	
Printing head		HTP500-PRINT	1SNA235716R2000		1	
Dust cover for HTP500 and AMS 600 systems		DUST COVER	1SNA360161R1500		1	
Wooden box for HTP500-V2 KIT		HTP500-WB	1SNA235717R2100		1	
Software CD		HTS500	1SNA235702R0300		1	
Support table		HTP500-BAS	1SNA235706R0700		1	
Power supply cable		HTP500-PW	1SNA235709R1200		1	

1SNK160015S0201 - Rev. A

MG3 thermal transfer printer
Kit and accessories

MG3 KIT

Description

- Versatile,
- Compact and robust,
- Easy to install and use.

Ordering details

Description	Color	Type	Part Number		Pkg pce	Weight (1 pce) g
MG3 Thermal transfer printer KIT		MG3 KIT	1SNB419001R0000		1	12600.00
List of items included in the KIT:						
1 MG3 Thermal transfer printer		MG3				
1 Software CD		MG3 SOFTWARE				
1 Power supply cable		MG3 POWER				
1 USB cable		MG3 USB				
1 Protective cover		MG2 COVE 991680				
1 Ribbon take up spool		MG2-CRB 991654				
1 Black monochrome ribbon		MG2-ETR 991600				
1 Support plate for cable tags MG-TPM		MG2-PWC 991000				
1 Support plate for labels, cables, plates and various markers		MG2-PLT 991002				
1 Support plate for terminal block markers MG-CPM-01(5x10 and 5x15),02,03,04,07		MG2-QTB 991011				
1 Support plate for SNK series terminal block markers (MG-CPM-13)		MG2-ETB 991016				

Support plate MG2-...

Support plates

Description	Color	Type	Part Number		Pkg pce	Weight (1 pce) g
Support template for:						
Cable tags MG-TPM		MG2-PWC 991000	1SNB991000R0000		1	148.00
Labels, cable tags, plates and various markers		MG2-PLT 991002	1SNB991002R0000		1	148.00
Terminal block markers MG-CPM-05,12		MG2-WTB 991004	1SNB991004R0000		1	151.00
Terminal block markers MG-CPM-06		MG2-STB 991005	1SNB991005R0000		1	158.00
Terminal block markers MG-CPM-10		MG2-CTB 991006	1SNB991006R0000		1	156.00
Cable tags MG-TDM (4x12 mm)		MG2-PTD 991007	1SNB991007R0000		1	126.00
Terminal block markers MG-CPM-01 (5x7 mm)		MG2-MTB 991008	1SNB991008R0000		1	149.00
Cable tags MG2-TDMO and MG-TDM (4x16 mm)		MG2-PTM 991010	1SNB991010R0000		1	116.00
Terminal block markers MG-CPM-01 (5x10 and 5x15 mm),02,03,04,07		MG2-QTB 991011	1SNB991011R0000		1	120.00
Terminal block markers TE Connectivity RC and MC series		MG2-ABM 991012	1SNB991012R0000		1	146.00
Terminal block markers MG-CPM-09		MG2-LTB 991013	1SNB991013R0000		1	128.00
Terminal block markers SNK series MG-CPM-13		MG2-ETB 991016	1SNB991016R0000		1	100.00

PET blank cover for support plate

Description	Color	Type	Part Number		Pkg pce	Weight (1 pce) g
PET blank for support plate MG2-PWC		MG2-TWC 991502	1SNB991502R0000		3	16.70
PET blank for support plate MG2-PLT		MG2-TLT 991522	1SNB991522R0000		3	14.70
PET blank for support plate MG2-PTD		MG2-TTD 991563	1SNB991563R0000		3	11.70
PET blank for support plate MG2-MTB		MG2-TMT 991513	1SNB991513R0000		3	12.00
PET blank for support plate MG2-WTB		MG2-TWT 991542	1SNB991542R0000		3	12.00
PET blank for support plate MG2-STB		MG2-TST 991552	1SNB991552R0000		3	21.50
PET blank for support plate MG2-CTB		MG2-TCT 991562	1SNB991562R0000		3	12.00
PET blank for support plate MG2-QTB		MG2-TGT 991532	1SNB991532R0000		3	11.70
PET blank for support plate MG2-ETB		MG2-TTB 991512	1SNB991512R0000		3	10.70

Ribbons MG2-ETR...

Accessories

Description	Color	Type	Part Number		Pkg pce	Weight (1 pce) g
Print head cleaning kit		MG2-CKP 991670	1SNB991670R0000		1	336.00
Black monochrome ribbon	Black	MG2-ETR 991600	1SNB991600R0000		1	227.00
Blue monochrome ribbon	Blue	MG2-ETR 991601	1SNB991601R0000		1	229.00
Red monochrome ribbon	Red	MG2-ETR 991602	1SNB991602R0000		1	255.00
Green monochrome ribbon	Green	MG2-ETR 991603	1SNB991603R0000		1	247.00
White monochrome ribbon	White	MG2-ETR 991606	1SNB991606R0000		1	333.00

1SNC160112S0201 - Rev. A

AMS 600

AMS 600

Description

- For basic marking applications,
- Economic,
- Full-size format,
- Print original manufacturers' markers.

Ordering details

Description	Color	Type	Part Number		Pkg pce	Weight (1 pce) g
AMS 600 Plotter KIT		AMS 600 KIT	1SNA360000R2400		1	12600
List of items included in the KIT:						
1 AMS 600 plotter pen printer		AMS 600				
1 Software CD		AMS SOFTWARE				
1 Power supply cable		AMS POWER				
1 USB cable		AMS USB				
1 Support plate for RC / MC / RCTT / WMTT / BA4 / RCT		SPRC1				
1 Support plate for MC...PA		SPRC 30-3				
1 Plotter pen Ø 0.25 mm .01 in		AMS PEN 0.25				
1 Plotter pen Ø 0.35 mm .014 in		AMS PEN 0.35				
5 Ink cartridges		AMS INK CARTRIDGES				
1 Cleaner fluid		AMS CLEANER FLUID				
1 Cleaner kit		AMS CLEANER KIT				

AMS 250

AMS 250

Description

- Basic needs,
- Economic,
- Half-size format
- Compatible with most of AMS 600 accessories.

Ordering details

Description	Color	Type	Part Number		Pkg pce	Weight (1 pce) g
AMS 250 Plotter KIT		AMS 250 BASIC KIT	1SNA360000R2500		1	8800
List of items included in the KIT:						
1 AMS 250 plotter pen printer		AMS 250 BASIC				
1 Software CD		AMS SOFTWARE				
1 Power supply cable		AMS POWER				
1 USB cable		AMS USB				
1 Support plate for BA4 / MC / RC / RCAL / RCT / RCTT		SPRC2				
1 Disposable plotter pen Ø 0.25 mm .01 in EDR ink		DISPOSABLE AMS PEN ED-R 0.25				
1 Disposable plotter pen Ø 0.35 mm .014 in EDR ink		DISPOSABLE AMS PEN ED-R 0.35				

1SNC160110S0201

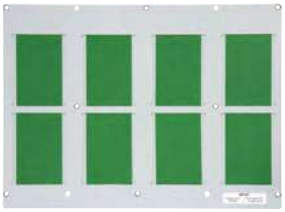

SPRC1

SPRC2

SPRC30-3

AMS PEN

AMS CLEANER KIT

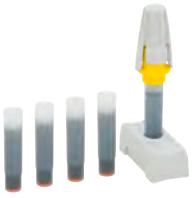

AMS INK CARTRIDGES

Support plates for TE Connectivity markers

Description	Compatibility AMS 500 AMS 600	Compatibility AMS 250	Type	Part Number		Pkg pce	Weight (1 pce) g
Support plates for:							
RC/MC/RCTT/WMTT/BA4/RCT full format	●		SPRC 1	1SNA360010R1500		1	1500.00
RC/MC/RCTT/WMTT/BA4/RCT		●	SPRC 2	1SNA360011R1500		1	600.00
RB strips	●	●	SPRC 4	1SNA360014R0500		1	300.00
RTM7-9	●		SPRC 5	1SNA360015R0600		1	1700.00
PIB	●	●	SPRC 13	1SNA360023R0600		1	260.00
BA5-50	●	●	SPRC 14	1SNA360024R0700		1	300.00
RC-X10A	●	●	SPRC 15	1SNA360025R0000		1	300.00
2 RC cards	●	●	SPRC 16	1SNA360026R0100		1	300.00
WM markers	●	●	SPRC 26	1SNA360036R0300		1	300.00
PAM strip	●		SPRC 27	1SNA360037R0400		1	300.00
RPCV markers	●	●	SPRC 28	1SNA360040R2300		1	300.00
RCL, P, W510	●	●	SPRC 29	1SNA360038R1500		1	300.00
MC... PA	●	●	SPRC 30-3	1SNA360039R1700		1	500.00
A4 universal support plate	●	●	SPRC 21	1SNA360031R0600		1	500.00

Support plates for other manufacturers

Description	Compatibility AMS 500 AMS 600	Compatibility AMS 250	Type	Part Number		Pkg pce	Weight (1 pce) g
Support plates for markers:							
Wieland	●	●	SPRC 6	1SNA360016R0700		1	350.00
Weidmüller	●	●	SPRC 7	1SNA360017R0000		1	400.00
Phoenix ZBM 5/6	●	●	SPRC 8	1SNA360018R1100		1	300.00
Phoenix ZB	●	●	SPRC 9	1SNA360019R1200		1	300.00
Allen Bradley WRZ	●	●	SPRC 10	1SNA360020R1700		1	330.00
Wago mini WSB5	●	●	SPRC 11	1SNA360021R0400		1	300.00

Accessories

Description		Diameter Color	Type	Part Number		Pkg pce	Weight (1 pce) g
Plotter pen P 2.0 black ink	Ø 0.18 mm 0.007 in	Red	AMS PEN 0.18	1SNA360103R1400		1	15.00
	Ø 0.25 mm 0.01 in	White	AMS PEN 0.25	1SNA360100R2500		1	15.00
	Ø 0.35 mm 0.014 in	Yellow	AMS PEN 0.35	1SNA360101R1200		1	15.00
	Ø 0.50 mm 0.02 in	Brown	AMS PEN 0.50	1SNA360104R1500		1	26.00
	Ø 0.70 mm 0.028 in	Blue	AMS PEN 0.70	1SNA360105R1600		1	26.00
	Ø 1.00 mm 0.039 in	Orange	AMS PEN 1.00	1SNA360106R1700		1	26.00
Disposable plotter pen P 2.0 black ink	Ø 0.25 mm 0.01 in	White	DISPOSABLE AMS PEN 0.25	1SNA360120R1000		1	24.00
	Ø 0.35 mm 0.014 in	Yellow	DISPOSABLE AMS PEN 0.35	1SNA360121R0500		1	24.00
Disposable plotter pen ED-R black ink	Ø 0.18 mm 0.007 in	Red	DISPOSABLE AMS PEN ED-R 0.18	1SNA360124R1000		1	24.00
	Ø 0.25 mm 0.01 in	White	DISPOSABLE AMS PEN ED-R 0.25	1SNA360122R1000		1	24.00
	Ø 0.35 mm 0.014 in	Yellow	DISPOSABLE AMS PEN ED-R 0.35	1SNA360123R0500		1	24.00
5 ink cartridges 1 ml			AMS INK CARTRIDGES	1SNA360150R2600		1	18.00
2 cleaner fluid bottles, 2x10 ml			AMS CLEANER FLUID	1SNA360155R1700		1	40.00
Cleaner kit including: 1 rinse bottle and 1 blotting paper			AMS CLEANER KIT	1SNA360156R1000		1	34.00
Dust cover			DUST COVER	1SNA360161R1500		1	200.00
Service kit for pen maintenance			SERVICE KIT FOR AMS 600	1SNA360162R1600		1	12.00
Self-adhesive support for support plate SPRC 1			SPDST1	1SNA360163R1700		1	70.00
Plotter head for AMS 600 including 1 printing module, 1 pen holder and 1 dust cover			PEN HOLDER	1SNA360098R1200		1	85.00

Index
Part Number classification

Part Number	Type	Page
1SNA113542R1000	PC5-2	105
1SNA113544R1200	PC5-10	105
1SNA116538R1700	PC8-2	226
1SNA116539R1000	PC8-3	226
1SNA116540R2500	PC8-4	226
1SNA163313R2400	PC8-10	155
1SNA164800R0300	PR3.G2	197
1SNA168500R1200	PR4	198
1SNA168672R1100	TGA8	120
1SNA168673R1200	TGA8	120
1SNA168674R1300	TGA8	120
1SNA168675R1400	ANT	120
1SNA168700R2200	PR5	198
1SNA173220R0500	PR30	196
1SNA173523R1100	PC81-10	120
1SNA174300R1700	PR3.Z2	196
1SNA178430R0500	RCPEB	201
1SNA178431R2200	EPR1	201
1SNA178529R0400	PR50	197
1SNA179371R1600	CN5	120
1SNA179726R0200	AJS9	152
1SNA206053R0700	BJMI31.2	91
1SNA206054R0000	BJMI31.3	91
1SNA206126R2500	BJMI36.2	92
1SNA206223R0600	BJMI36.3	92
1SNA206680R1500	AJS9-BK	154
1SNA206681R0200	AJS9-GN	154
1SNA206682R0300	AJS9-GR	154
1SNA206683R0400	AJS9-BL	154
1SNA206720R1400	AJS9-RD	154
1SNA206721R0100	AL4-M3	152
1SNA206765R0000	AJS9-WH	154
1SNA206772R0000	AJS9-PR	154
1SNA206782R0000	AJS9-BR	154
1SNA235106R2600	PAM43020	230
1SNA235155R2600	PIB2-TT	201
1SNA235157R2000	PIB2-TT-YL	201
1SNA235158R0100	RCPEAD-TT	201
1SNA235159R0200	RCPEAD-TT-YL	201
1SNA235702R0300	HTS500	265
1SNA235703R0400	HTP500-FEED	265
1SNA235704R0500	HTP500-PL	265
1SNA235705R0600	HTP500-PL2	265
1SNA235706R0700	HTP500-BAS	265
1SNA235709R1200	HTP500-PW	265
1SNA235710R0600	RIB-B	265
1SNA235711R2300	RIB-R	265
1SNA235714R2600	HTP500-CLEAN	265
1SNA235715R2700	HTP500-ROLL	265
1SNA235716R2000	HTP500-PRINT	265
1SNA235717R2100	HTP500-WB	265
1SNA235718R0200	RIB-RS	265
1SNA238000R1600	RC1010	91
1SNA360000R2400	AMS 600 KIT	245
1SNA360000R2500	AMS 250 BASIC KIT	267
1SNA360010R1500	SPRC 1	268
1SNA360011R1500	SPRC 2	268
1SNA360014R0500	SPRC 4	268
1SNA360015R0600	SPRC 5	268
1SNA360016R0700	SPRC 6	268
1SNA360017R0000	SPRC 7	268
1SNA360018R1100	SPRC 8	268
1SNA360019R1200	SPRC 9	268
1SNA360020R1700	SPRC 10	268
1SNA360021R0400	SPRC 11	268
1SNA360023R0600	SPRC 13	268
1SNA360024R0700	SPRC 14	268
1SNA360025R0000	SPRC 15	268
1SNA360026R0100	SPRC 16	268
1SNA360031R0600	SPRC 21	264
1SNA360036R0300	SPRC 26	268
1SNA360037R0400	SPRC 27	268
1SNA360038R1500	SPRC 29	268
1SNA360039R1700	SPRC 30-3	245
1SNA360040R2300	SPRC 28	268
1SNA360098R1200	PEN HOLDER	268
1SNA360100R2500	AMS PEN 0.25	268
1SNA360101R1200	AMS PEN 0.35	268
1SNA360103R1400	AMS PEN 0.18	268
1SNA360104R1500	AMS PEN 0.50	268
1SNA360105R1600	AMS PEN 0.70	268
1SNA360106R1700	AMS PEN 1.00	268
1SNA360120R1000	DISPOSABLE AMS PEN 0.25	268
1SNA360121R0500	DISPOSABLE AMS PEN 0.35	268
1SNA360122R1000	DISPOSABLE AMS PEN ED-R 0.25	268
1SNA360123R0500	DISPOSABLE AMS PEN ED-R 0.35	268
1SNA360124R1000	DISPOSABLE AMS PEN ED-R 0.18	268
1SNA360150R2600	AMS INK CARTRIDGES	268
1SNA360155R1700	AMS CLEANER FLUID	268
1SNA360156R1000	AMS CLEANER KIT	268
1SNA360161R1500	DUST COVER	265
1SNA360162R1600	SERVICE KIT FOR AMS 500	268
1SNA360163R1700	SPDST1	268
1SNA399726R0700	EPR2	201
1SNA399787R0500	CPBP2	92
1SNA399788R1600	CPBP1	91
1SNA400711R0600	PC8-R1	153
1SNA400712R0700	PC8-R2	155
1SNA400713R0000	PC8-R3	155
1SNA400724R0300	PC8-R4	155
1SNA400842R0000	PC8-R5	155
1SNA400843R0000	PC8-R6	155
1SNA400849R0000	PC8-R7	155
1SNA400850R0000	PC8-R8	155
1SNB040340R0412	MG2-TDMO-01 40340	261
1SNB040341R0416	MG2-TDMO-01 40341	261
1SNB040390R0412	MG2-TDMO-01 40390	261
1SNB040391R0416	MG2-TDMO-01 40391	261
1SNB040440R0412	MG2-TDMO-02 40440	261
1SNB040441R0416	MG2-TDMO-02 40441	261
1SNB040490R0412	MG2-TDMO-02 40490	261
1SNB040491R0416	MG2-TDMO-02 40491	261
1SNB040540R0412	MG2-TDMO-03 40540	261
1SNB040541R0416	MG2-TDMO-03 40541	261
1SNB040590R0412	MG2-TDMO-03 40590	261
1SNB040591R0416	MG2-TDMO-03 40591	261
1SNB041740R0512	MG-CPM 13 41740	244
1SNB041741R0612	MG-CPM 13 41741	250
1SNB041790R0512	MG-CPM 13 41790	21
1SNB041791R0612	MG-CPM 13 41791	30
1SNB043196R0012	MG-CPMFA 43196	185
1SNB045194R1735	MG-TAR 45194	201
1SNB045490R8530	MG-TAR 45490	201
1SNB046415R0615	MG-VYT 46415	217
1SNB046915R0615	MG-VYT 46915	217
1SNB049046R0929	MG-TAPW 49046	263
1SNB049096R0929	MG-TAPW 49096	263
1SNB049148R1735	MG-TAA 49148	201
1SNB049198R1735	MG-TAA 49198	201
1SNB049448R8530	MG-TAA 49448	201
1SNB049498R8530	MG-TAA 49498	201
1SNB419001R0000	MG3 KIT	244
1SNB991000R0000	MG2-PWC 991000	266
1SNB991002R0000	MG2-PLT 991002	266
1SNB991004R0000	MG2-WTB 991004	266
1SNB991005R0000	MG2-STB 991005	266
1SNB991006R0000	MG2-CTB 991006	266
1SNB991007R0000	MG2-PTD 991007	266
1SNB991008R0000	MG2-MTB 991008	266
1SNB991010R0000	MG2-PTM 991010	261
1SNB991011R0000	MG2-QTB 991011	266
1SNB991012R0000	MG2-ABM 991012	266
1SNB991013R0000	MG2-LTB 991013	266
1SNB991016R0000	MG2-ETB 991016	244
1SNB991502R0000	MG2-TWC 991502	266
1SNB991512R0000	MG2-TTB 991512	266
1SNB991513R0000	MG2-TMT 991513	266
1SNB991522R0000	MG2-TLT 991522	266
1SNB991532R0000	MG2-TGT 991532	266
1SNB991542R0000	MG2-TWT 991542	266
1SNB991552R0000	MG2-TST 991552	266
1SNB991562R0000	MG2-TCT 991562	266
1SNB991563R0000	MG2-TTD 991563	266
1SNB991600R0000	MG2-ETR 991600	266
1SNB991601R0000	MG2-ETR 991601	266
1SNB991602R0000	MG2-ETR 991602	266
1SNB991603R0000	MG2-ETR 991603	266
1SNB991606R0000	MG2-ETR 991606	266
1SNB991670R0000	MG2-CKP 991670	266
1SNK140000R0000	MC512	21
1SNK140004R0000	MC512-YL	244
1SNK140011R0000	MC512PA	246
1SNK140012R0000	MC512PA	248
1SNK140021R0000	MC512PA	246
1SNK140022R0000	MC512PA	248
1SNK140031R0000	MC512PA	246
1SNK140032R0000	MC512PA	248
1SNK140041R0000	MC512PA	246
1SNK140042R0000	MC512PA	248
1SNK140051R0000	MC512PA	246
1SNK140052R0000	MC512PA	248
1SNK140061R0000	MC512PA	246
1SNK140062R0000	MC512PA	248
1SNK140071R0000	MC512PA	246
1SNK140072R0000	MC512PA	248
1SNK140081R0000	MC512PA	246
1SNK140082R0000	MC512PA	248
1SNK140083R0000	MC512PA	246
1SNK140084R0000	MC512PA	248
1SNK140091R0000	MC512PA	246
1SNK140092R0000	MC512PA	248
1SNK140101R0000	MC512PA	246
1SNK140102R0000	MC512PA	248
1SNK140111R0000	MC512PA	246
1SNK140112R0000	MC512PA	248
1SNK140121R0000	MC512PA	246
1SNK140122R0000	MC512PA	248
1SNK140131R0000	MC512PA	246
1SNK140132R0000	MC512PA	248
1SNK140141R0000	MC512PA	246
1SNK140142R0000	MC512PA	248
1SNK140151R0000	MC512PA	246
1SNK140152R0000	MC512PA	248
1SNK140161R0000	MC512PA	246
1SNK140162R0000	MC512PA	248
1SNK140171R0000	MC512PA	246
1SNK140172R0000	MC512PA	248
1SNK140181R0000	MC512PA	246
1SNK140182R0000	MC512PA	248
1SNK140191R0000	MC512PA	246
1SNK140192R0000	MC512PA	248
1SNK140201R0000	MC512PA	246
1SNK140202R0000	MC512PA	248
1SNK145011R0000	MC512PA	246
1SNK145012R0000	MC512PA	248
1SNK145021R0000	MC512PA	246
1SNK145022R0000	MC512PA	248
1SNK145031R0000	MC512PA	246
1SNK145032R0000	MC512PA	248
1SNK145041R0000	MC512PA	246
1SNK145042R0000	MC512PA	248
1SNK145051R0000	MC512PA	246
1SNK145052R0000	MC512PA	248
1SNK145061R0000	MC512PA	246
1SNK145062R0000	MC512PA	248
1SNK145071R0000	MC512PA	246
1SNK145072R0000	MC512PA	248
1SNK145081R0000	MC512PA	246
1SNK145082R0000	MC512PA	248
1SNK145091R0000	MC512PA	246
1SNK145092R0000	MC512PA	248
1SNK145102R0000	MC512PA	248
1SNK146011R0000	MC512PA	246
1SNK146012R0000	MC512PA	248
1SNK146021R0000	MC512PA	246
1SNK146022R0000	MC512PA	248
1SNK146031R0000	MC512PA	246
1SNK146032R0000	MC512PA	248
1SNK146041R0000	MC512PA	246
1SNK146042R0000	MC512PA	248
1SNK146051R0000	MC512PA	246
1SNK146052R0000	MC512PA	248
1SNK146061R0000	MC512PA	246
1SNK146062R0000	MC512PA	248
1SNK146071R0000	MC512PA	246
1SNK146072R0000	MC512PA	248
1SNK146081R0000	MC512PA	246
1SNK146082R0000	MC512PA	248
1SNK146091R0000	MC512PA	246
1SNK146092R0000	MC512PA	248
1SNK146101R0000	MC512PA	246
1SNK146102R0000	MC512PA	248
1SNK146111R0000	MC512PA	246
1SNK146112R0000	MC512PA	248
1SNK146121R0000	MC512PA	246
1SNK146122R0000	MC512PA	248
1SNK146131R0000	MC512PA	246
1SNK146132R0000	MC512PA	248
1SNK146141R0000	MC512PA	246
1SNK146142R0000	MC512PA	248
1SNK146151R0000	MC512PA	246
1SNK146152R0000	MC512PA	248
1SNK146161R0000	MC512PA	246
1SNK146162R0000	MC512PA	248
1SNK146171R0000	MC512PA	246
1SNK146172R0000	MC512PA	248
1SNK146181R0000	MC512PA	246
1SNK146182R0000	MC512PA	248
1SNK146191R0000	MC512PA	246
1SNK146192R0000	MC512PA	248
1SNK146201R0000	MC512PA	246
1SNK146202R0000	MC512PA	248
1SNK146211R0000	MC512PA	246
1SNK146212R0000	MC512PA	248
1SNK146221R0000	MC512PA	246
1SNK146222R0000	MC512PA	248
1SNK146231R0000	MC512PA	246

Index

Part Number classification

Part Number	Type	Page
1SNK146232R0000	MC512PA	249
1SNK146241R0000	MC512PA	246
1SNK146242R0000	MC512PA	249
1SNK146251R0000	MC512PA	246
1SNK146252R0000	MC512PA	249
1SNK146261R0000	MC512PA	247
1SNK146262R0000	MC512PA	249
1SNK147001R0000	MC512PA	247
1SNK147002R0000	MC512PA	249
1SNK147011R0000	MC512PA	247
1SNK147012R0000	MC512PA	249
1SNK147021R0000	MC512PA	247
1SNK147022R0000	MC512PA	249
1SNK147031R0000	MC512PA	247
1SNK147032R0000	MC512PA	249
1SNK147041R0000	MC512PA	247
1SNK147042R0000	MC512PA	249
1SNK147051R0000	MC512PA	247
1SNK147052R0000	MC512PA	249
1SNK147061R0000	MC512PA	247
1SNK147062R0000	MC512PA	249
1SNK147071R0000	MC512PA	247
1SNK147072R0000	MC512PA	249
1SNK147081R0000	MC512PA	247
1SNK147082R0000	MC512PA	249
1SNK147091R0000	MC512PA	247
1SNK147092R0000	MC512PA	249
1SNK148001R0000	MC512PA	247
1SNK148002R0000	MC512PA	249
1SNK148011R0000	MC512PA	247
1SNK148012R0000	MC512PA	249
1SNK148021R0000	MC512PA	247
1SNK148022R0000	MC512PA	249
1SNK148031R0000	MC512PA	247
1SNK148032R0000	MC512PA	249
1SNK148041R0000	MC512PA	247
1SNK148042R0000	MC512PA	249
1SNK148051R0000	MC512PA	247
1SNK148052R0000	MC512PA	249
1SNK148061R0000	MC512PA	247
1SNK148062R0000	MC512PA	249
1SNK148071R0000	MC512PA	247
1SNK148072R0000	MC512PA	249
1SNK148091R0000	MC512PA	247
1SNK148092R0000	MC512PA	249
1SNK148101R0000	MC512PA	247
1SNK148102R0000	MC512PA	249
1SNK148111R0000	MC512PA	247
1SNK148112R0000	MC512PA	249
1SNK148121R0000	MC512PA	247
1SNK148122R0000	MC512PA	249
1SNK148131R0000	MC512PA	247
1SNK148132R0000	MC512PA	249
1SNK148141R0000	MC512PA	247
1SNK148142R0000	MC512PA	249
1SNK148151R0000	MC512PA	247
1SNK148152R0000	MC512PA	249
1SNK148161R0000	MC512PA	247
1SNK148162R0000	MC512PA	249
1SNK148171R0000	MC512PA	247
1SNK148172R0000	MC512PA	249
1SNK148181R0000	MC512PA	247
1SNK148182R0000	MC512PA	249
1SNK148192R0000	MC512PA	249
1SNK148202R0000	MC512PA	249
1SNK148212R0000	MC512PA	249
1SNK148222R0000	MC512PA	249
1SNK149001R0000	MC512PA	247
1SNK149002R0000	MC512PA	249
1SNK149011R0000	MC512PA	247
1SNK149012R0000	MC512PA	249
1SNK149999R0000	MC512PA	21
1SNK150000R0000	MC612	24
1SNK150004R0000	MC612-YL	250
1SNK150011R0000	MC612PA	252
1SNK150012R0000	MC612PA	254
1SNK150021R0000	MC612PA	252
1SNK150022R0000	MC612PA	254
1SNK150031R0000	MC612PA	252
1SNK150032R0000	MC612PA	254
1SNK150041R0000	MC612PA	252
1SNK150042R0000	MC612PA	254
1SNK150051R0000	MC612PA	252
1SNK150052R0000	MC612PA	254
1SNK150061R0000	MC612PA	252
1SNK150062R0000	MC612PA	254
1SNK150071R0000	MC612PA	252
1SNK150072R0000	MC612PA	254
1SNK150081R0000	MC612PA	252
1SNK150082R0000	MC612PA	254
1SNK150083R0000	MC612PA	252
1SNK150084R0000	MC612PA	254
1SNK150091R0000	MC612PA	252
1SNK150092R0000	MC612PA	254
1SNK150101R0000	MC612PA	252
1SNK150102R0000	MC612PA	254
1SNK150111R0000	MC612PA	252
1SNK150112R0000	MC612PA	254
1SNK150121R0000	MC612PA	252
1SNK150122R0000	MC612PA	254
1SNK150131R0000	MC612PA	252
1SNK150132R0000	MC612PA	254
1SNK150141R0000	MC612PA	252
1SNK150142R0000	MC612PA	254
1SNK150151R0000	MC612PA	252
1SNK150152R0000	MC612PA	254
1SNK150161R0000	MC612PA	252
1SNK150162R0000	MC612PA	254
1SNK150171R0000	MC612PA	252
1SNK150172R0000	MC612PA	254
1SNK150181R0000	MC612PA	252
1SNK150182R0000	MC612PA	254
1SNK150191R0000	MC612PA	252
1SNK150192R0000	MC612PA	254
1SNK150201R0000	MC612PA	252
1SNK150202R0000	MC612PA	254
1SNK155011R0000	MC612PA	252
1SNK155012R0000	MC612PA	254
1SNK155021R0000	MC612PA	252
1SNK155022R0000	MC612PA	254
1SNK155031R0000	MC612PA	252
1SNK155032R0000	MC612PA	254
1SNK155041R0000	MC612PA	252
1SNK155042R0000	MC612PA	254
1SNK155051R0000	MC612PA	252
1SNK155052R0000	MC612PA	254
1SNK155061R0000	MC612PA	252
1SNK155062R0000	MC612PA	254
1SNK155071R0000	MC612PA	252
1SNK155072R0000	MC612PA	254
1SNK155081R0000	MC612PA	252
1SNK155082R0000	MC612PA	254
1SNK155091R0000	MC612PA	252
1SNK155092R0000	MC612PA	254
1SNK155102R0000	MC612PA	254
1SNK156011R0000	MC612PA	252
1SNK156012R0000	MC612PA	254
1SNK156021R0000	MC612PA	252
1SNK156022R0000	MC612PA	254
1SNK156031R0000	MC612PA	252
1SNK156032R0000	MC612PA	254
1SNK156041R0000	MC612PA	252
1SNK156042R0000	MC612PA	254
1SNK156051R0000	MC612PA	252
1SNK156052R0000	MC612PA	254
1SNK156061R0000	MC612PA	252
1SNK156062R0000	MC612PA	254
1SNK156071R0000	MC612PA	252
1SNK156072R0000	MC612PA	254
1SNK156081R0000	MC612PA	252
1SNK156082R0000	MC612PA	254
1SNK156091R0000	MC612PA	252
1SNK156092R0000	MC612PA	254
1SNK156101R0000	MC612PA	252
1SNK156102R0000	MC612PA	254
1SNK156111R0000	MC612PA	252
1SNK156112R0000	MC612PA	254
1SNK156121R0000	MC612PA	252
1SNK156122R0000	MC612PA	254
1SNK156131R0000	MC612PA	252
1SNK156132R0000	MC612PA	254
1SNK156141R0000	MC612PA	252
1SNK156142R0000	MC612PA	254
1SNK156151R0000	MC612PA	252
1SNK156152R0000	MC612PA	254
1SNK156161R0000	MC612PA	252
1SNK156162R0000	MC612PA	254
1SNK156171R0000	MC612PA	252
1SNK156172R0000	MC612PA	254
1SNK156181R0000	MC612PA	252
1SNK156182R0000	MC612PA	254
1SNK156191R0000	MC612PA	252
1SNK156192R0000	MC612PA	254
1SNK156201R0000	MC612PA	252
1SNK156202R0000	MC612PA	254
1SNK156211R0000	MC612PA	252
1SNK156212R0000	MC612PA	254
1SNK156221R0000	MC612PA	252
1SNK156222R0000	MC612PA	254
1SNK156231R0000	MC612PA	252
1SNK156232R0000	MC612PA	254
1SNK156241R0000	MC612PA	253
1SNK156242R0000	MC612PA	254
1SNK156251R0000	MC612PA	253
1SNK156252R0000	MC612PA	255
1SNK156261R0000	MC612PA	253
1SNK156262R0000	MC612PA	255
1SNK157001R0000	MC612PA	253
1SNK157002R0000	MC612PA	255
1SNK157011R0000	MC612PA	253
1SNK157012R0000	MC612PA	255
1SNK157021R0000	MC612PA	253
1SNK157022R0000	MC612PA	255
1SNK157031R0000	MC612PA	253
1SNK157032R0000	MC612PA	255
1SNK157041R0000	MC612PA	253
1SNK157042R0000	MC612PA	255
1SNK157051R0000	MC612PA	253
1SNK157052R0000	MC612PA	255
1SNK157061R0000	MC612PA	253
1SNK157062R0000	MC612PA	255
1SNK157071R0000	MC612PA	253
1SNK157072R0000	MC612PA	255
1SNK157081R0000	MC612PA	253
1SNK157082R0000	MC612PA	255
1SNK157091R0000	MC612PA	253
1SNK157092R0000	MC612PA	255
1SNK158001R0000	MC612PA	253
1SNK158002R0000	MC612PA	255
1SNK158011R0000	MC612PA	253
1SNK158012R0000	MC612PA	255
1SNK158021R0000	MC612PA	253
1SNK158022R0000	MC612PA	255
1SNK158031R0000	MC612PA	253
1SNK158032R0000	MC612PA	255
1SNK158041R0000	MC612PA	253
1SNK158042R0000	MC612PA	255
1SNK158051R0000	MC612PA	253
1SNK158052R0000	MC612PA	255
1SNK158061R0000	MC612PA	253
1SNK158062R0000	MC612PA	255
1SNK158071R0000	MC612PA	253
1SNK158072R0000	MC612PA	255
1SNK158091R0000	MC612PA	253
1SNK158092R0000	MC612PA	255
1SNK158101R0000	MC612PA	253
1SNK158102R0000	MC612PA	255
1SNK158111R0000	MC612PA	253
1SNK158112R0000	MC612PA	255
1SNK158121R0000	MC612PA	253
1SNK158122R0000	MC612PA	255
1SNK158131R0000	MC612PA	253
1SNK158132R0000	MC612PA	255
1SNK158141R0000	MC612PA	253
1SNK158142R0000	MC612PA	255
1SNK158151R0000	MC612PA	253
1SNK158152R0000	MC612PA	255
1SNK158161R0000	MC612PA	253
1SNK158162R0000	MC612PA	255
1SNK158171R0000	MC612PA	253
1SNK158172R0000	MC612PA	255
1SNK158181R0000	MC612PA	253
1SNK158182R0000	MC612PA	255
1SNK158192R0000	MC612PA	255
1SNK158202R0000	MC612PA	255
1SNK158212R0000	MC612PA	255
1SNK158222R0000	MC612PA	255
1SNK159001R0000	MC612PA	253
1SNK159002R0000	MC612PA	255
1SNK159011R0000	MC612PA	253
1SNK159012R0000	MC612PA	255
1SNK159999R0000	MC612PA	24
1SNK160000R0000	MC812	30
1SNK160004R0000	MC812-YL	256
1SNK160011R0000	MC812PA	257
1SNK160012R0000	MC812PA	259
1SNK160021R0000	MC812PA	257
1SNK160022R0000	MC812PA	259
1SNK160031R0000	MC812PA	257
1SNK160032R0000	MC812PA	259
1SNK160041R0000	MC812PA	257
1SNK160042R0000	MC812PA	259
1SNK160051R0000	MC812PA	257
1SNK160052R0000	MC812PA	259
1SNK160061R0000	MC812PA	257
1SNK160062R0000	MC812PA	259
1SNK160071R0000	MC812PA	257

Index
Part Number classification

Part Number	Type	Page
1SNK160072R0000	MC812PA	259
1SNK160081R0000	MC812PA	257
1SNK160082R0000	MC812PA	259
1SNK160083R0000	MC812PA	257
1SNK160084R0000	MC812PA	259
1SNK160091R0000	MC812PA	257
1SNK160092R0000	MC812PA	259
1SNK160101R0000	MC812PA	257
1SNK160102R0000	MC812PA	259
1SNK160111R0000	MC812PA	257
1SNK160112R0000	MC812PA	259
1SNK160121R0000	MC812PA	257
1SNK160122R0000	MC812PA	259
1SNK160131R0000	MC812PA	257
1SNK160132R0000	MC812PA	259
1SNK160141R0000	MC812PA	257
1SNK160142R0000	MC812PA	259
1SNK160151R0000	MC812PA	257
1SNK160152R0000	MC812PA	259
1SNK160161R0000	MC812PA	257
1SNK160162R0000	MC812PA	259
1SNK160171R0000	MC812PA	257
1SNK160172R0000	MC812PA	259
1SNK160181R0000	MC812PA	257
1SNK160182R0000	MC812PA	259
1SNK160191R0000	MC812PA	257
1SNK160192R0000	MC812PA	259
1SNK160201R0000	MC812PA	257
1SNK160202R0000	MC812PA	259
1SNK165011R0000	MC812PA	257
1SNK165012R0000	MC812PA	259
1SNK165021R0000	MC812PA	257
1SNK165022R0000	MC812PA	259
1SNK165031R0000	MC812PA	257
1SNK165032R0000	MC812PA	259
1SNK165041R0000	MC812PA	257
1SNK165042R0000	MC812PA	259
1SNK165051R0000	MC812PA	257
1SNK165052R0000	MC812PA	259
1SNK165061R0000	MC812PA	257
1SNK165062R0000	MC812PA	259
1SNK165071R0000	MC812PA	257
1SNK165072R0000	MC812PA	259
1SNK165081R0000	MC812PA	257
1SNK165082R0000	MC812PA	259
1SNK165091R0000	MC812PA	257
1SNK165092R0000	MC812PA	259
1SNK165102R0000	MC812PA	259
1SNK166011R0000	MC812PA	257
1SNK166012R0000	MC812PA	259
1SNK166021R0000	MC812PA	257
1SNK166022R0000	MC812PA	259
1SNK166031R0000	MC812PA	257
1SNK166032R0000	MC812PA	259
1SNK166041R0000	MC812PA	257
1SNK166042R0000	MC812PA	259
1SNK166051R0000	MC812PA	257
1SNK166052R0000	MC812PA	259
1SNK166061R0000	MC812PA	257
1SNK166062R0000	MC812PA	259
1SNK166071R0000	MC812PA	257
1SNK166072R0000	MC812PA	259
1SNK166081R0000	MC812PA	257
1SNK166082R0000	MC812PA	259
1SNK166091R0000	MC812PA	257
1SNK166092R0000	MC812PA	259
1SNK166101R0000	MC812PA	257
1SNK166102R0000	MC812PA	259
1SNK166111R0000	MC812PA	257
1SNK166112R0000	MC812PA	259
1SNK166121R0000	MC812PA	257
1SNK166122R0000	MC812PA	259
1SNK166131R0000	MC812PA	257
1SNK166132R0000	MC812PA	259
1SNK166141R0000	MC812PA	257
1SNK166142R0000	MC812PA	259
1SNK166151R0000	MC812PA	257
1SNK166152R0000	MC812PA	259
1SNK166161R0000	MC812PA	257
1SNK166162R0000	MC812PA	259
1SNK166171R0000	MC812PA	257
1SNK166172R0000	MC812PA	259
1SNK166181R0000	MC812PA	257
1SNK166182R0000	MC812PA	259
1SNK166191R0000	MC812PA	257
1SNK166192R0000	MC812PA	259
1SNK166201R0000	MC812PA	257
1SNK166202R0000	MC812PA	259
1SNK166211R0000	MC812PA	257
1SNK166212R0000	MC812PA	259
1SNK166221R0000	MC812PA	257
1SNK166222R0000	MC812PA	259
1SNK166231R0000	MC812PA	258
1SNK166232R0000	MC812PA	260
1SNK166241R0000	MC812PA	258
1SNK166242R0000	MC812PA	260
1SNK166251R0000	MC812PA	258
1SNK166252R0000	MC812PA	260
1SNK166261R0000	MC812PA	258
1SNK166262R0000	MC812PA	260
1SNK167001R0000	MC812PA	258
1SNK167002R0000	MC812PA	260
1SNK167011R0000	MC812PA	258
1SNK167012R0000	MC812PA	260
1SNK167021R0000	MC812PA	258
1SNK167022R0000	MC812PA	260
1SNK167031R0000	MC812PA	258
1SNK167032R0000	MC812PA	260
1SNK167041R0000	MC812PA	258
1SNK167042R0000	MC812PA	260
1SNK167051R0000	MC812PA	258
1SNK167052R0000	MC812PA	260
1SNK167061R0000	MC812PA	258
1SNK167062R0000	MC812PA	260
1SNK167071R0000	MC812PA	258
1SNK167072R0000	MC812PA	260
1SNK167081R0000	MC812PA	258
1SNK167082R0000	MC812PA	260
1SNK167091R0000	MC812PA	258
1SNK167092R0000	MC812PA	260
1SNK168001R0000	MC812PA	258
1SNK168002R0000	MC812PA	260
1SNK168011R0000	MC812PA	258
1SNK168012R0000	MC812PA	260
1SNK168021R0000	MC812PA	258
1SNK168022R0000	MC812PA	260
1SNK168031R0000	MC812PA	258
1SNK168032R0000	MC812PA	260
1SNK168041R0000	MC812PA	258
1SNK168042R0000	MC812PA	260
1SNK168051R0000	MC812PA	258
1SNK168052R0000	MC812PA	260
1SNK168061R0000	MC812PA	258
1SNK168062R0000	MC812PA	260
1SNK168071R0000	MC812PA	258
1SNK168072R0000	MC812PA	260
1SNK168091R0000	MC812PA	258
1SNK168092R0000	MC812PA	260
1SNK168101R0000	MC812PA	258
1SNK168102R0000	MC812PA	260
1SNK168111R0000	MC812PA	258
1SNK168112R0000	MC812PA	260
1SNK168121R0000	MC812PA	258
1SNK168122R0000	MC812PA	260
1SNK168131R0000	MC812PA	258
1SNK168132R0000	MC812PA	260
1SNK168141R0000	MC812PA	258
1SNK168142R0000	MC812PA	260
1SNK168151R0000	MC812PA	258
1SNK168152R0000	MC812PA	260
1SNK168161R0000	MC812PA	258
1SNK168162R0000	MC812PA	260
1SNK168171R0000	MC812PA	258
1SNK168172R0000	MC812PA	260
1SNK168181R0000	MC812PA	258
1SNK168182R0000	MC812PA	260
1SNK168192R0000	MC812PA	260
1SNK168202R0000	MC812PA	260
1SNK168212R0000	MC812PA	260
1SNK168222R0000	MC812PA	260
1SNK169001R0000	MC812PA	258
1SNK169002R0000	MC812PA	260
1SNK169011R0000	MC812PA	258
1SNK169012R0000	MC812PA	260
1SNK169999R0000	MC812PA	30
1SNK505010R0000	ZS4	80
1SNK505020R0000	ZS4-BL	80
1SNK505030R0000	ZS4-OR	80
1SNK505060R0000	ZS4-YL	80
1SNK505061R0000	ZS4-GN	80
1SNK505062R0000	ZS4-RD	80
1SNK505063R0000	ZS4-PR	80
1SNK505064R0000	ZS4-BR	80
1SNK505065R0000	ZS4-WH	80
1SNK505066R0000	ZS4-BK	80
1SNK505150R0000	ZS4-PE	80
1SNK505210R0000	ZS4-D2	136
1SNK505211R0000	ZS4-D1	137
1SNK505212R0000	ZS4-T3	146
1SNK505214R0000	ZS4-D-CH-UD	148
1SNK505215R0000	ZS4-D-CH-DU	149
1SNK505220R0000	ZS4-D2-BL	136
1SNK505230R0000	ZS4-D2-OR	136
1SNK505310R0000	ZS4-S	105
1SNK505311R0000	ZS4-S-T2	106
1SNK505312R0000	ZS4-S-T2.3	106
1SNK505313R0000	ZS4-SP	112
1SNK505314R0000	ZS4-SP-T2	113
1SNK505315R0000	ZS4-D2-S	142
1SNK505316R0000	ZS4-D2-S-T2	143
1SNK505320R0000	ZS4-S-BL	105
1SNK505321R0000	ZS4-S-T2-BL	106
1SNK505330R0000	ZS4-S-OR	105
1SNK505331R0000	ZS4-S-T2-OR	106
1SNK505910R0000	ES4	80
1SNK505911R0000	ES6-4S	83
1SNK505912R0000	ES6-3S	82
1SNK505960R0000	ES4-D2	136
1SNK505961R0000	ES4-T3	146
1SNK506010R0000	ZS6	81
1SNK506011R0000	ZS6-3S	82
1SNK506012R0000	ZS6-4S	83
1SNK506013R0000	ZS4-R2	130
1SNK506020R0000	ZS6-BL	81
1SNK506021R0000	ZS6-3S-BL	82
1SNK506022R0000	ZS6-4S-BL	83
1SNK506030R0000	ZS6-OR	81
1SNK506060R0000	ZS6-YL	81
1SNK506061R0000	ZS6-GN	81
1SNK506062R0000	ZS6-RD	81
1SNK506063R0000	ZS6-PR	81
1SNK506064R0000	ZS6-BR	81
1SNK506065R0000	ZS6-WH	81
1SNK506066R0000	ZS6-BK	81
1SNK506067R0000	ZS6-3S-YL	82
1SNK506068R0000	ZS6-4S-YL	83
1SNK506150R0000	ZS6-PE	81
1SNK506151R0000	ZS6-3S-PE	82
1SNK506152R0000	ZS6-4S-PE	83
1SNK506153R0000	ZS4-PE-R2	131
1SNK506210R0000	ZS6-D2	138
1SNK506211R0000	ZS6-D1	139
1SNK506212R0000	ZS6-D2-PE	140
1SNK506213R0000	ZS4-T3-R1	147
1SNK506214R0000	ZS6-D1-RD	139
1SNK506220R0000	ZS6-D2-BL	138
1SNK506230R0000	ZS6-D2-OR	138
1SNK506250R0000	ZS6-D1-PE	138
1SNK506260R0000	ZS6-D2-YL	138
1SNK506262R0000	ZS6-D2-RD	138
1SNK506265R0000	ZS6-D2-WH	138
1SNK506266R0000	ZS6-D2-BK	138
1SNK506310R0000	ZS4-S-R1	107
1SNK506311R0000	ZS4-S-T2-R1	108
1SNK506312R0000	ZS4-S-T2.3-R1	108
1SNK506313R0000	ZS4-SP-R1	114
1SNK506314R0000	ZS4-SP-T2-R1	115
1SNK506315R0000	ZS6-S	109
1SNK506316R0000	ZS6-S-4S-T2	110
1SNK506320R0000	ZS4-S-R1-BL	107
1SNK506321R0000	ZS4-S-T2-R1-BL	108
1SNK506322R0000	ZS6-S-BL	109
1SNK506330R0000	ZS4-S-R1-OR	107
1SNK506331R0000	ZS4-S-T2-R1-OR	108
1SNK506410R0000	ZS4-SF	126
1SNK506411R0000	ZS4-SF-T2	127
1SNK506412R0000	ZS4-SF-R1	128
1SNK506413R0000	ZS4-SF-R2	129
1SNK506414R0000	ZS4-S-R2	132
1SNK506415R0000	ZS4-SF-R3	128
1SNK506416R0000	ZS4-SF-R4	129
1SNK508010R0000	ZS10	84
1SNK508011R0000	ZS10-R1	152
1SNK508013R0000	ZS4-R1	124
1SNK508020R0000	ZS10-BL	84
1SNK508030R0000	ZS10-OR	84
1SNK508060R0000	ZS10-YL	84
1SNK508061R0000	ZS10-GN	84
1SNK508062R0000	ZS10-RD	84
1SNK508063R0000	ZS10-PR	84
1SNK508064R0000	ZS10-BR	84
1SNK508065R0000	ZS10-WH	84
1SNK508066R0000	ZS10-BK	84
1SNK508150R0000	ZS10-PE	84
1SNK508151R0000	ZS10-PE-R1	153
1SNK508310R0000	ZS10-ST	154
1SNK508311R0000	ZS10-ST-T4	152

Index

Part Number classification

Part Number	Type	Page
1SNK508312R0000	ZS10-ST-1	152
1SNK508315R0000	ZS10-S	111
1SNK508316R0000	ZS10-SP	116
1SNK508320R0000	ZS10-S-BL	111
1SNK508410R0000	ZS4-SF1	120
1SNK508411R0000	ZS4-SF1-T2	121
1SNK508412R0000	ZS4-SF1-R1	122
1SNK508413R0000	ZS4-SF1-R2	123
1SNK508414R0000	ZS4-SF1-R3	122
1SNK508415R0000	ZS4-SF1-R4	123
1SNK508416R0000	ZS4-S-R3	125
1SNK508417R0000	ZS10-S-R2	135
1SNK508418R0000	ZS10-SF	133
1SNK508419R0000	ZS4-S-R3-T2	125
1SNK508421R0000	ZS10-SF-R1	134
1SNK508422R0000	ZS10-SF-R3	134
1SNK508423R0000	ZS4-D2-SF1-R1	145
1SNK508424R0000	ZS4-D2-SF1-R3	145
1SNK508425R0000	ZS4-D2-SF1	144
1SNK508430R0000	ZS4-SF1-OR	120
1SNK508910R0000	ES10-ST	152
1SNK508911R0000	ES4-D2-SF1	144
1SNK508960R0000	ES4-SF	120
1SNK510010R0000	ZS16	85
1SNK510020R0000	ZS16-BL	85
1SNK510030R0000	ZS16-OR	85
1SNK510150R0000	ZS16-PE	85
1SNK512010R0000	ZS25	86
1SNK512020R0000	ZS25-BL	86
1SNK512060R0000	ZS25-YL	86
1SNK512150R0000	ZS25-PE	86
1SNK516010R0000	ZS35	87
1SNK516011R0000	ZS50	88
1SNK516020R0000	ZS35-BL	87
1SNK516021R0000	ZS50-BL	88
1SNK516030R0000	ZS35-OR	87
1SNK516060R0000	ZS50-YL	88
1SNK516063R0000	ZS50-RD	88
1SNK516064R0000	ZS50-BK	88
1SNK516150R0000	ZS35-PE	87
1SNK516151R0000	ZS50-PE	88
1SNK516170R0000	ZS35-PEN	101
1SNK522010R0000	ZS70	89
1SNK522020R0000	ZS70-BL	89
1SNK522060R0000	ZS70-YL	89
1SNK522150R0000	ZS70-PE	89
1SNK526010R0000	ZS95	90
1SNK526020R0000	ZS95-BL	90
1SNK526060R0000	ZS95-YL	90
1SNK526150R0000	ZS95-PE	90
1SNK531010R0000	ZS150	91
1SNK531020R0000	ZS150-BL	91
1SNK531060R0000	ZS150-YL	91
1SNK536010R0000	ZS240	92
1SNK536020R0000	ZS240-BL	92
1SNK536060R0000	ZS240-YL	92
1SNK705010R0000	ZK2.5	21
1SNK705011R0000	ZK2.5-3P	22
1SNK705012R0000	ZK2.5-4P	23
1SNK705020R0000	ZK2.5-BL	21
1SNK705021R0000	ZK2.5-3P-BL	22
1SNK705022R0000	ZK2.5-4P-BL	23
1SNK705030R0000	ZK2.5-OR	21
1SNK705031R0000	ZK2.5-3P-OR	22
1SNK705032R0000	ZK2.5-4P-OR	23
1SNK705060R0000	ZK2.5-YL	21
1SNK705061R0000	ZK2.5-GN	21
1SNK705062R0000	ZK2.5-RD	21
1SNK705065R0000	ZK2.5-WH	21
1SNK705066R0000	ZK2.5-BK	21
1SNK705067R0000	ZK2.5-3P-YL	22
1SNK705068R0000	ZK2.5-3P-GN	22
1SNK705069R0000	ZK2.5-3P-RD	22
1SNK705072R0000	ZK2.5-3P-WH	22
1SNK705073R0000	ZK2.5-3P-BK	22
1SNK705074R0000	ZK2.5-4P-YL	23
1SNK705075R0000	ZK2.5-4P-GN	23
1SNK705076R0000	ZK2.5-4P-RD	23
1SNK705079R0000	ZK2.5-4P-WH	23
1SNK705080R0000	ZK2.5-4P-BK	23
1SNK705150R0000	ZK2.5-PE	21
1SNK705151R0000	ZK2.5-PE-3P	22
1SNK705152R0000	ZK2.5-PE-4P	23
1SNK705210R0000	ZK2.5-D2	56
1SNK705211R0000	ZK2.5-D1	57
1SNK705212R0000	ZK2.5-D2-PE	58
1SNK705213R0000	ZK2.5-D-CH-UD	67
1SNK705214R0000	ZK2.5-D-CH-DU	68
1SNK705219R0000	ZK2.5-D-CH2-DU-RL	69
1SNK705220R0000	ZK2.5-D2-BL	56
1SNK705250R0000	ZK2.5-D1-PE	56
1SNK705310R0000	ZK2.5-S	49
1SNK705311R0000	ZK2.5-SP	52
1SNK705312R0000	ZK2.5-S-4P	50
1SNK705313R0000	ZK2.5-SP-4P	53
1SNK705320R0000	ZK2.5-S-BL	49
1SNK705321R0000	ZK2.5-S-4P-BL	50
1SNK705330R0000	ZK2.5-S-OR	49
1SNK705331R0000	ZK2.5-S-4P-OR	50
1SNK705510R0000	ZK2.5-T3	60
1SNK705511R0000	ZK2.5-T1	61
1SNK705512R0000	ZK2.5-L-L-PE	62
1SNK705513R0000	ZK2.5-L-N-PE	63
1SNK705550R0000	ZK2.5-T1-PE	60
1SNK705710R0000	ZK2.5-CH-4P-LR	65
1SNK705711R0000	ZK2.5-CH-4P-RL	66
1SNK705910R0000	EK2.5	21
1SNK705911R0000	EK2.5-3P	22
1SNK705912R0000	EK2.5-4P	23
1SNK705913R0000	EK2.5-S-4P	50
1SNK705960R0000	EK2.5-D2	56
1SNK705961R0000	EK2.5-T3	60
1SNK706010R0000	ZK4	24
1SNK706011R0000	ZK4-3P	25
1SNK706012R0000	ZK4-4P	26
1SNK706020R0000	ZK4-BL	24
1SNK706021R0000	ZK4-3P-BL	25
1SNK706022R0000	ZK4-4P-BL	26
1SNK706030R0000	ZK4-OR	24
1SNK706031R0000	ZK4-3P-OR	25
1SNK706032R0000	ZK4-4P-OR	26
1SNK706060R0000	ZK4-YL	24
1SNK706062R0000	ZK4-RD	24
1SNK706066R0000	ZK4-BK	24
1SNK706150R0000	ZK4-PE	24
1SNK706151R0000	ZK4-PE-3P	25
1SNK706152R0000	ZK4-PE-4P	26
1SNK706310R0000	ZK2.5-S-R1	51
1SNK706410R0000	ZK2.5-SF	51
1SNK706411R0000	ZK2.5-SF-R1	55
1SNK706412R0000	ZK2.5-SF-R3	55
1SNK708010R0000	ZK6	27
1SNK708011R0000	ZK6-3P	28
1SNK708020R0000	ZK6-BL	27
1SNK708021R0000	ZK6-3P-BL	28
1SNK708030R0000	ZK6-OR	27
1SNK708031R0000	ZK6-3P-OR	28
1SNK708060R0000	ZK6-YL	27
1SNK708062R0000	ZK6-RD	27
1SNK708066R0000	ZK6-BK	27
1SNK708150R0000	ZK6-PE	27
1SNK708151R0000	ZK6-PE-3P	28
1SNK708911R0000	EK6-3P	28
1SNK710010R0000	ZK10	29
1SNK710011R0000	ZK10-3P	31
1SNK710020R0000	ZK10-BL	29
1SNK710021R0000	ZK10-3P-BL	31
1SNK710030R0000	ZK10-OR	29
1SNK710063R0000	ZK10-PV	30
1SNK710064R0000	ZK10-3P-PV	32
1SNK710065R0000	ZK10-PV-BL	30
1SNK710067R0000	ZK10-3P-PV-BL	32
1SNK710150R0000	ZK10-PE	30
1SNK710151R0000	ZK10-PE-3P	32
1SNK710910R0000	EK10	29
1SNK710911R0000	EK10-3P	31
1SNK712010R0000	ZK16	33
1SNK712011R0000	ZK16-3P	35
1SNK712020R0000	ZK16-BL	33
1SNK712021R0000	ZK16-3P-BL	35
1SNK712063R0000	ZK16-PV	34
1SNK712064R0000	ZK16-3P-PV	36
1SNK712065R0000	ZK16-PV-BL	34
1SNK712067R0000	ZK16-3P-PV-BL	36
1SNK712150R0000	ZK16-PE	34
1SNK712151R0000	ZK16-PE-3P	36
1SNK805010R0000	ZDK2.5-22	177
1SNK805013R0000	ZDS4-22	190
1SNK805014R0000	ZDK2.5-21	176
1SNK805015R0000	ZDK2.5-11	175
1SNK805016R0000	ZD2.5-11	172
1SNK805017R0000	ZD2.5-22	173
1SNK805020R0000	ZDK2.5-22-BL	177
1SNK805025R0000	ZDK2.5-11-BL	175
1SNK805150R0000	ZDK2.5-11-PE	179
1SNK805152R0000	ZDK2.5-22-PE	180
1SNK805156R0000	ZD2.5-22-PE	174
1SNK805212R0000	ZDK2.5-D2-PE	183
1SNK805213R0000	ZDK2.5-D2	181
1SNK805214R0000	ZDK2.5-D1	182
1SNK805223R0000	ZDK2.5-D2-BL	181
1SNK805250R0000	ZDK2.5-D1-PE	184
1SNK805712R0000	CDK2.5	172
1SNK805713R0000	CDK2.5-E	172
1SNK805714R0000	CDS4	190
1SNK805715R0000	CDS4-E	190
1SNK805738R0000	CDK2.5-J	186
1SNK805739R0000	CDK2.5-J-E	186
1SNK805740R0000	CDK2.5-2P-J	187
1SNK805741R0000	CDK2.5-2P-J-E	187
1SNK805742R0000	CDK2.5-BL	175
1SNK805743R0000	CDK2.5-BL-E	175
1SNK805744R0000	CDK2.5-J-BL	186
1SNK805745R0000	CDK2.5-J-BL-E	186
1SNK805746R0000	CDK2.5-2P-J-BL	187
1SNK805747R0000	CDK2.5-2P-J-BL-E	187
1SNK805748R0000	CDK2.5-J-PE	186
1SNK805749R0000	CDK2.5-J-PE-E	186
1SNK805750R0000	CDK2.5-PE	174
1SNK805751R0000	CDK2.5-2P-J-PE	187
1SNK805752R0000	CDK2.5-2P-J-PE-E	187
1SNK805753R0000	CDK2.5-PE-E	174
1SNK805910R0000	EDK2.5-22	177
1SNK805911R0000	EDS4-22	190
1SNK805913R0000	EDK2.5-D	181
1SNK805914R0000	EDK2.5-21	176
1SNK805915R0000	EDK2.5-11	172
1SNK805917R0000	ED2.5-22	173
1SNK806010R0000	ZDK4-22	178
1SNK806013R0000	ZDS4-22-R1	192
1SNK806712R0000	CDK4	178
1SNK806713R0000	CDK4-E	178
1SNK806714R0000	CDS4-R1	192
1SNK900001R0000	BAM4	80
1SNK900002R0000	BAZ1	30
1SNK900101R0000	CS	80
1SNK900102R0000	BAZH1	56
1SNK900103R0000	CS-R1	80
1SNK900104R0000	ES-TC8	27
1SNK900105R0000	ES-TC6	24
1SNK900106R0000	CS-R2	21
1SNK900107R0000	CS-R3	30
1SNK900200R0000	TC5	21
1SNK900201R0000	TC5-R1	21
1SNK900203R0000	TP2	30
1SNK900205R0000	TP4	30
1SNK900401R0000	PG5	52
1SNK900402R0000	PG5-R1	52
1SNK900403R0000	PG5-R2	211
1SNK900600R0000	SHBS	80
1SNK900601R0000	SHBP	21
1SNK900602R0000	SHB	56
1SNK900603R0000	JB85-3	21
1SNK900604R0000	CO	155
1SNK900605R0000	LH	199
1SNK900606R0000	LH-J	56
1SNK900607R0000	LH-R1	199
1SNK900611R0000	UMH	30
1SNK900618R0000	PL5	80
1SNK900619R0000	PL6	81
1SNK900620R0000	PL8	84
1SNK900621R0000	PL10	85
1SNK900622R0000	PL16	87
1SNK900624R0000	KCO	155
1SNK900625R0000	PT-3	210
1SNK900627R0000	RILS	219
1SNK900630R0000	MCLH	201
1SNK900631R0000	MCLH-R1	201
1SNK900633R0000	MCLH-YL	201
1SNK900634R0000	MCLH-R1-YL	201
1SNK900636R0000	COP-ZD	172
1SNK900637R0000	VR-ZD	185
1SNK900640R0000	TO3.5-50	213
1SNK900641R0000	TO4-100	213
1SNK900642R0000	TO5.5-125	213
1SNK900643R0000	TO6.5-150	213
1SNK900644R0000	TO3.5-100-INS	213
1SNK900650R0000	PS-3	213
1SNK900652R0000	SC-JB8-2	152
1SNK900653R0000	SC-JB8-3	156
1SNK900654R0000	SC-JB8-4	156
1SNK900655R0000	SC-JB8-5	231
1SNK900657R0000	SC-JB8-3-OR	231
1SNK900658R0000	SC-JB8-4-OR	231
1SNK900659R0000	TO3.5-50-A	213
1SNK900660R0000	PT-ZD	185
1SNK905302R0000	JB5-2	21

Index
Part Number classification

Part Number	Type	Page
1SNK905303R0000	JB5-3	21
1SNK905304R0000	JB5-4	21
1SNK905305R0000	JB5-5	21
1SNK905310R0000	JB5-10	21
1SNK905350R0000	JB5-50	21
1SNK906302R0000	JB6-2	24
1SNK906303R0000	JB6-3	24
1SNK906304R0000	JB6-4	24
1SNK906305R0000	JB6-5	24
1SNK906310R0000	JB6-10	24
1SNK906350R0000	JB6-50	24
1SNK908302R0000	JB8-2	27
1SNK908303R0000	JB8-3	27
1SNK908304R0000	JB8-4	27
1SNK908305R0000	JB8-5	27
1SNK908310R0000	JB8-10	27
1SNK908902R0000	JB8-2-R1	154
1SNK908903R0000	JB8-3-R1	154
1SNK908904R0000	JB8-4-R1	154
1SNK908905R0000	JB8-5-R1	154
1SNK908910R0000	JB8-10-R1	154
1SNK910302R0000	JB10-2	29
1SNK910303R0000	JB10-3	29
1SNK910304R0000	JB10-4	29
1SNK910305R0000	JB10-5	29
1SNK910310R0000	JB10-10	29
1SNK912302R0000	JB12-2	30
1SNK912303R0000	JB12-3	30
1SNK912305R0000	JB12-5	30
1SNK916302R0000	JB16-2	87
1SNK916303R0000	JB16-3	87
1SNK916304R0000	JB16-4	87
1SNK916305R0000	JB16-5	87
1SNK916310R0000	JB16-10	87
1SNK922302R0000	JB22-2	89
1SNK922303R0000	JB22-3	89
1SNK922305R0000	JB22-5	89
1SNK922310R0000	JB22-10	89
1SNK926302R0000	JB26-2	90
1SNK926303R0000	JB26-3	90
1SNK926305R0000	JB26-5	90
1SNK926310R0000	JB26-10	90

Part Number	Type	Page

Part Number	Type	Page

Index
Type classification

Type	Part Number	Page
AJS9	1SNA179726R0200	152
AJS9-BK	1SNA206680R1500	154
AJS9-BL	1SNA206683R0400	154
AJS9-BR	1SNA206782R0000	154
AJS9-GN	1SNA206681R0200	154
AJS9-GR	1SNA206682R0300	154
AJS9-PR	1SNA206772R0000	154
AJS9-RD	1SNA206720R1400	154
AJS9-WH	1SNA206765R0000	154
AL4-M3	1SNA206721R0100	152
AMS 250 BASIC KIT	1SNA360000R2500	267
AMS 600 KIT	1SNA360000R2400	245
AMS CLEANER FLUID	1SNA360155R1700	268
AMS CLEANER KIT	1SNA360156R1000	268
AMS INK CARTRIDGES	1SNA360150R2600	268
AMS PEN 0.18	1SNA360103R1400	268
AMS PEN 0.25	1SNA360100R2500	268
AMS PEN 0.35	1SNA360101R1200	268
AMS PEN 0.50	1SNA360104R1500	268
AMS PEN 0.70	1SNA360105R1600	268
AMS PEN 1.00	1SNA360106R1700	268
ANT	1SNA168675R1400	120
BAM4	1SNK900001R0000	80
BAZ1	1SNK900002R0000	30
BAZH1	1SNK900102R0000	56
BJMI31.2	1SNA206053R0700	91
BJMI31.3	1SNA206054R0000	91
BJMI36.2	1SNA206126R2500	92
BJMI36.3	1SNA206223R0600	92
CDK2.5	1SNK805712R0000	172
CDK2.5-2P-J	1SNK805740R0000	187
CDK2.5-2P-J-BL	1SNK805746R0000	187
CDK2.5-2P-J-BL-E	1SNK805747R0000	187
CDK2.5-2P-J-E	1SNK805741R0000	187
CDK2.5-2P-J-PE	1SNK805751R0000	187
CDK2.5-2P-J-PE-E	1SNK805752R0000	187
CDK2.5-BL	1SNK805742R0000	175
CDK2.5-BL-E	1SNK805743R0000	175
CDK2.5-E	1SNK805713R0000	172
CDK2.5-J	1SNK805738R0000	186
CDK2.5-J-BL	1SNK805744R0000	186
CDK2.5-J-BL-E	1SNK805745R0000	186
CDK2.5-J-E	1SNK805739R0000	186
CDK2.5-J-PE	1SNK805748R0000	186
CDK2.5-J-PE-E	1SNK805749R0000	186
CDK2.5-PE	1SNK805750R0000	174
CDK2.5-PE-E	1SNK805753R0000	174
CDK4	1SNK806712R0000	178
CDK4-E	1SNK806713R0000	178
CDS4	1SNK805714R0000	190
CDS4-E	1SNK805715R0000	190
CDS4-R1	1SNK806714R0000	192
CN5	1SNA179371R1600	120
CO	1SNK900604R0000	155
COP-ZD	1SNK900636R0000	172
CPBP1	1SNA399788R1600	91
CPBP2	1SNA399787R0500	92
CS	1SNK900101R0000	80
CS-R1	1SNK900103R0000	80
CS-R2	1SNK900106R0000	21
CS-R3	1SNK900107R0000	30
DISPOSABLE AMS PEN 0.25	1SNAt360120R1000	268
DISPOSABLE AMS PEN 0.35	1SNA360121R0500	268
DISPOSABLE AMS PEN ED-R 0.18	1SNA360124R1000	268
DISPOSABLE AMS PEN ED-R 0.25	1SNA360122R1000	268
DISPOSABLE AMS PEN ED-R 0.35	1SNA360123R0500	268
DUST COVER	1SNA360161R1500	265
ED2.5-22	1SNK805917R0000	173
EDK2.5-11	1SNK805915R0000	172
EDK2.5-21	1SNK805914R0000	176
EDK2.5-22	1SNK805910R0000	177
EDK2.5-D	1SNK805913R0000	181
EDS4-22	1SNK805911R0000	190
EK10	1SNK710910R0000	29
EK10-3P	1SNK710911R0000	31
EK2.5	1SNK705910R0000	21
EK2.5-3P	1SNK705911R0000	22
EK2.5-4P	1SNK705912R0000	23
EK2.5-D2	1SNK705960R0000	56
EK2.5-S-4P	1SNK705913R0000	50
EK2.5-T3	1SNK705961R0000	60
EK6-3P	1SNK708911R0000	28
EPR1	1SNA178431R2200	201
EPR2	1SNA399726R0700	201
ES10-ST	1SNK508910R0000	152
ES4	1SNK505910R0000	80
ES4-D2	1SNK505960R0000	136
ES4-D2-SF1	1SNK508911R0000	144
ES4-SF	1SNK508960R0000	120
ES4-T3	1SNK505961R0000	146
ES6-3S	1SNK505912R0000	82
ES6-4S	1SNK505911R0000	83
ES-TC6	1SNK900105R0000	24
ES-TC8	1SNK900104R0000	27
HTP500-BAS	1SNA235706R0700	265
HTP500-CLEAN	1SNA235714R2600	265
HTP500-FEED	1SNA235703R0400	265
HTP500-PL	1SNA235704R0500	265
HTP500-PL2	1SNA235705R0600	265
HTP500-PRINT	1SNA235716R2000	265
HTP500-PW	1SNA235709R1200	265
HTP500-ROLL	1SNA235715R2700	265
HTP500-WB	1SNA235717R2100	265
HTS500	1SNA235702R0300	265
JB10-10	1SNK910310R0000	29
JB10-2	1SNK910302R0000	29
JB10-3	1SNK910303R0000	29
JB10-4	1SNK910304R0000	29
JB10-5	1SNK910305R0000	29
JB12-2	1SNK912302R0000	30
JB12-3	1SNK912303R0000	30
JB12-5	1SNK912305R0000	30
JB16-10	1SNK916310R0000	87
JB16-2	1SNK916302R0000	87
JB16-3	1SNK916303R0000	87
JB16-4	1SNK916304R0000	87
JB16-5	1SNK916305R0000	87
JB22-10	1SNK922310R0000	89
JB22-2	1SNK922302R0000	89
JB22-3	1SNK922303R0000	89
JB22-5	1SNK922305R0000	89
JB26-10	1SNK926310R0000	90
JB26-2	1SNK926302R0000	90
JB26-3	1SNK926303R0000	90
JB26-5	1SNK926305R0000	90
JB5-10	1SNK905310R0000	21
JB5-2	1SNK905302R0000	21
JB5-3	1SNK905303R0000	21
JB5-4	1SNK905304R0000	21
JB5-5	1SNK905305R0000	21
JB5-50	1SNK905350R0000	21
JB6-10	1SNK906310R0000	24
JB6-2	1SNK906302R0000	24
JB6-3	1SNK906303R0000	24
JB6-4	1SNK906304R0000	24
JB6-5	1SNK906305R0000	24
JB6-50	1SNK906350R0000	24
JB8-10	1SNK908310R0000	27
JB8-10-R1	1SNK908910R0000	154
JB8-2	1SNK908302R0000	27
JB8-2-R1	1SNK908902R0000	154
JB8-3	1SNK908303R0000	27
JB8-3-R1	1SNK908903R0000	154
JB8-4	1SNK908304R0000	27
JB8-4-R1	1SNK908904R0000	154
JB8-5	1SNK908305R0000	27
JB85-3	1SNK900603R0000	21
JB8-5-R1	1SNK908905R0000	154
KCO	1SNK900624R0000	155
LH	1SNK900605R0000	199
LH-J	1SNK900606R0000	56
LH-R1	1SNK900607R0000	199
MC512	1SNK140000R0000	21
MC512PA	1SNK140011R0000	246
	1SNK140012R0000	248
	1SNK140021R0000	246
	1SNK140022R0000	248
	1SNK140031R0000	246
	1SNK140032R0000	248
	1SNK140041R0000	246
	1SNK140042R0000	248
	1SNK140051R0000	246
	1SNK140052R0000	248
	1SNK140061R0000	246
	1SNK140062R0000	248
	1SNK140071R0000	246
	1SNK140072R0000	248
	1SNK140081R0000	246
	1SNK140082R0000	248
	1SNK140083R0000	246
	1SNK140084R0000	248
	1SNK140091R0000	246
	1SNK140092R0000	248
	1SNK140101R0000	246
	1SNK140102R0000	248
	1SNK140111R0000	246
	1SNK140112R0000	248
	1SNK140121R0000	246
	1SNK140122R0000	248
	1SNK140131R0000	246
	1SNK140132R0000	248
	1SNK140141R0000	246
	1SNK140142R0000	248
	1SNK140151R0000	246
	1SNK140152R0000	248
	1SNK140161R0000	246
	1SNK140162R0000	248
	1SNK140171R0000	246
	1SNK140172R0000	248
	1SNK140181R0000	246
	1SNK140182R0000	248
	1SNK140191R0000	246
	1SNK140192R0000	248
	1SNK140201R0000	246
	1SNK140202R0000	248
	1SNK145011R0000	246
	1SNK145012R0000	248
	1SNK145021R0000	246
	1SNK145022R0000	248
	1SNK145031R0000	246
	1SNK145032R0000	248
	1SNK145041R0000	246
	1SNK145042R0000	248
	1SNK145051R0000	246
	1SNK145052R0000	248
	1SNK145061R0000	246
	1SNK145062R0000	248
	1SNK145071R0000	246
	1SNK145072R0000	248
	1SNK145081R0000	246
	1SNK145082R0000	248
	1SNK145091R0000	246
	1SNK145092R0000	248
	1SNK145102R0000	248
	1SNK146011R0000	246
	1SNK146012R0000	248
	1SNK146021R0000	246
	1SNK146022R0000	248
	1SNK146031R0000	246
	1SNK146032R0000	248
	1SNK146041R0000	246
	1SNK146042R0000	248
	1SNK146051R0000	246
	1SNK146052R0000	248
	1SNK146061R0000	246
	1SNK146062R0000	248
	1SNK146071R0000	246
	1SNK146072R0000	248
	1SNK146081R0000	246
	1SNK146082R0000	248
	1SNK146091R0000	246
	1SNK146092R0000	248
	1SNK146101R0000	246
	1SNK146102R0000	248
	1SNK146111R0000	246
	1SNK146112R0000	248
	1SNK146121R0000	246
	1SNK146122R0000	248
	1SNK146131R0000	246
	1SNK146132R0000	248
	1SNK146141R0000	246
	1SNK146142R0000	248
	1SNK146151R0000	246
	1SNK146152R0000	248
	1SNK146161R0000	246
	1SNK146162R0000	248
	1SNK146171R0000	246
	1SNK146172R0000	248
	1SNK146181R0000	246
	1SNK146182R0000	248
	1SNK146191R0000	246
	1SNK146192R0000	248
	1SNK146201R0000	246
	1SNK146202R0000	248
	1SNK146211R0000	246
	1SNK146212R0000	248
	1SNK146221R0000	246
	1SNK146222R0000	248
	1SNK146231R0000	246
	1SNK146232R0000	249
	1SNK146241R0000	246
	1SNK146242R0000	249
	1SNK146251R0000	246
	1SNK146252R0000	249
	1SNK146261R0000	247
	1SNK146262R0000	249
	1SNK147001R0000	247

Index
Type classification

Type	Part Number	Page
	1SNK147002R0000	249
	1SNK147011R0000	247
	1SNK147012R0000	249
	1SNK147021R0000	247
	1SNK147022R0000	249
	1SNK147031R0000	247
	1SNK147032R0000	249
	1SNK147041R0000	247
	1SNK147042R0000	249
	1SNK147051R0000	247
	1SNK147052R0000	249
	1SNK147061R0000	247
	1SNK147062R0000	249
	1SNK147071R0000	247
	1SNK147072R0000	249
	1SNK147081R0000	247
	1SNK147082R0000	249
	1SNK147091R0000	247
	1SNK147092R0000	249
	1SNK148001R0000	247
	1SNK148002R0000	249
	1SNK148011R0000	247
	1SNK148012R0000	249
	1SNK148021R0000	247
	1SNK148022R0000	249
	1SNK148031R0000	247
	1SNK148032R0000	249
	1SNK148041R0000	247
	1SNK148042R0000	249
	1SNK148051R0000	247
	1SNK148052R0000	249
	1SNK148061R0000	247
	1SNK148062R0000	249
	1SNK148071R0000	247
	1SNK148072R0000	249
	1SNK148091R0000	247
	1SNK148092R0000	249
	1SNK148101R0000	247
	1SNK148102R0000	249
	1SNK148111R0000	247
	1SNK148112R0000	249
	1SNK148121R0000	247
	1SNK148122R0000	249
	1SNK148131R0000	247
	1SNK148132R0000	249
	1SNK148141R0000	247
	1SNK148142R0000	249
	1SNK148151R0000	247
	1SNK148152R0000	249
	1SNK148161R0000	247
	1SNK148162R0000	249
	1SNK148171R0000	247
	1SNK148172R0000	249
	1SNK148181R0000	247
	1SNK148182R0000	249
	1SNK148192R0000	249
	1SNK148202R0000	249
	1SNK148212R0000	249
	1SNK148222R0000	249
	1SNK149001R0000	247
	1SNK149002R0000	249
	1SNK149011R0000	247
	1SNK149012R0000	249
	1SNK149999R0000	21
MC512-YL	1SNK140004R0000	244
MC612	1SNK150000R0000	24
MC612PA	1SNK150011R0000	252
	1SNK150012R0000	254
	1SNK150021R0000	252
	1SNK150022R0000	254
	1SNK150031R0000	252
	1SNK150032R0000	254
	1SNK150041R0000	252
	1SNK150042R0000	254
	1SNK150051R0000	252
	1SNK150052R0000	254
	1SNK150061R0000	252
	1SNK150062R0000	254
	1SNK150071R0000	252
	1SNK150072R0000	254
	1SNK150081R0000	252
	1SNK150082R0000	254
	1SNK150083R0000	252
	1SNK150084R0000	254
	1SNK150091R0000	252
	1SNK150092R0000	254
	1SNK150101R0000	252
	1SNK150102R0000	254
	1SNK150111R0000	252

Type	Part Number	Page
	1SNK150112R0000	254
	1SNK150121R0000	252
	1SNK150122R0000	254
	1SNK150131R0000	252
	1SNK150132R0000	254
	1SNK150141R0000	252
	1SNK150142R0000	254
	1SNK150151R0000	252
	1SNK150152R0000	254
	1SNK150161R0000	252
	1SNK150162R0000	254
	1SNK150171R0000	252
	1SNK150172R0000	254
	1SNK150181R0000	252
	1SNK150182R0000	254
	1SNK150191R0000	252
	1SNK150192R0000	254
	1SNK150201R0000	252
	1SNK150202R0000	254
	1SNK155011R0000	252
	1SNK155012R0000	254
	1SNK155021R0000	252
	1SNK155022R0000	254
	1SNK155031R0000	252
	1SNK155032R0000	254
	1SNK155041R0000	252
	1SNK155042R0000	254
	1SNK155051R0000	252
	1SNK155052R0000	254
	1SNK155061R0000	252
	1SNK155062R0000	254
	1SNK155071R0000	252
	1SNK155072R0000	254
	1SNK155081R0000	252
	1SNK155082R0000	254
	1SNK155091R0000	252
	1SNK155092R0000	254
	1SNK155102R0000	254
	1SNK156011R0000	252
	1SNK156012R0000	254
	1SNK156021R0000	252
	1SNK156022R0000	254
	1SNK156031R0000	252
	1SNK156032R0000	254
	1SNK156041R0000	252
	1SNK156042R0000	254
	1SNK156051R0000	252
	1SNK156052R0000	254
	1SNK156061R0000	252
	1SNK156062R0000	254
	1SNK156071R0000	252
	1SNK156072R0000	254
	1SNK156081R0000	252
	1SNK156082R0000	254
	1SNK156091R0000	252
	1SNK156092R0000	254
	1SNK156101R0000	252
	1SNK156102R0000	254
	1SNK156111R0000	252
	1SNK156112R0000	254
	1SNK156121R0000	252
	1SNK156122R0000	254
	1SNK156131R0000	252
	1SNK156132R0000	254
	1SNK156141R0000	252
	1SNK156142R0000	254
	1SNK156151R0000	252
	1SNK156152R0000	254
	1SNK156161R0000	252
	1SNK156162R0000	254
	1SNK156171R0000	252
	1SNK156172R0000	254
	1SNK156181R0000	252
	1SNK156182R0000	254
	1SNK156191R0000	252
	1SNK156192R0000	254
	1SNK156201R0000	252
	1SNK156202R0000	254
	1SNK156211R0000	252
	1SNK156212R0000	254
	1SNK156221R0000	252
	1SNK156222R0000	254
	1SNK156231R0000	252
	1SNK156232R0000	254
	1SNK156241R0000	253
	1SNK156242R0000	254
	1SNK156251R0000	253
	1SNK156252R0000	255
	1SNK156261R0000	253

Type	Part Number	Page
	1SNK156262R0000	255
	1SNK157001R0000	253
	1SNK157002R0000	255
	1SNK157011R0000	253
	1SNK157012R0000	255
	1SNK157021R0000	253
	1SNK157022R0000	255
	1SNK157031R0000	253
	1SNK157032R0000	255
	1SNK157041R0000	253
	1SNK157042R0000	255
	1SNK157051R0000	253
	1SNK157052R0000	255
	1SNK157061R0000	253
	1SNK157062R0000	255
	1SNK157071R0000	253
	1SNK157072R0000	255
	1SNK157081R0000	253
	1SNK157082R0000	255
	1SNK157091R0000	253
	1SNK157092R0000	255
	1SNK158001R0000	253
	1SNK158002R0000	255
	1SNK158011R0000	253
	1SNK158012R0000	255
	1SNK158021R0000	253
	1SNK158022R0000	255
	1SNK158031R0000	253
	1SNK158032R0000	255
	1SNK158041R0000	253
	1SNK158042R0000	255
	1SNK158051R0000	253
	1SNK158052R0000	255
	1SNK158061R0000	253
	1SNK158062R0000	255
	1SNK158071R0000	253
	1SNK158072R0000	255
	1SNK158091R0000	253
	1SNK158092R0000	255
	1SNK158101R0000	253
	1SNK158102R0000	255
	1SNK158111R0000	253
	1SNK158112R0000	255
	1SNK158121R0000	253
	1SNK158122R0000	255
	1SNK158131R0000	253
	1SNK158132R0000	255
	1SNK158141R0000	253
	1SNK158142R0000	255
	1SNK158151R0000	253
	1SNK158152R0000	255
	1SNK158161R0000	253
	1SNK158162R0000	255
	1SNK158171R0000	253
	1SNK158172R0000	255
	1SNK158181R0000	253
	1SNK158182R0000	255
	1SNK158192R0000	255
	1SNK158202R0000	255
	1SNK158212R0000	255
	1SNK158222R0000	255
	1SNK159001R0000	253
	1SNK159002R0000	255
	1SNK159011R0000	253
	1SNK159012R0000	255
	1SNK159999R0000	24
MC612-YL	1SNK150004R0000	250
MC812	1SNK160000R0000	30
MC812PA	1SNK160011R0000	257
	1SNK160012R0000	259
	1SNK160021R0000	257
	1SNK160022R0000	259
	1SNK160031R0000	257
	1SNK160032R0000	259
	1SNK160041R0000	257
	1SNK160042R0000	259
	1SNK160051R0000	257
	1SNK160052R0000	259
	1SNK160061R0000	257
	1SNK160062R0000	259
	1SNK160071R0000	257
	1SNK160072R0000	259
	1SNK160081R0000	257
	1SNK160082R0000	259
	1SNK160083R0000	257
	1SNK160084R0000	259
	1SNK160091R0000	257
	1SNK160092R0000	259
	1SNK160101R0000	257

Index_1SNK160027C0206

Index
Type classification

Type	Part Number	Page
	1SNK160102R0000	259
	1SNK160111R0000	257
	1SNK160112R0000	259
	1SNK160121R0000	257
	1SNK160122R0000	259
	1SNK160131R0000	257
	1SNK160132R0000	259
	1SNK160141R0000	257
	1SNK160142R0000	259
	1SNK160151R0000	257
	1SNK160152R0000	259
	1SNK160161R0000	257
	1SNK160162R0000	259
	1SNK160171R0000	257
	1SNK160172R0000	259
	1SNK160181R0000	257
	1SNK160182R0000	259
	1SNK160191R0000	257
	1SNK160192R0000	259
	1SNK160201R0000	257
	1SNK160202R0000	259
	1SNK165011R0000	257
	1SNK165012R0000	259
	1SNK165021R0000	257
	1SNK165022R0000	259
	1SNK165031R0000	257
	1SNK165032R0000	259
	1SNK165041R0000	257
	1SNK165042R0000	259
	1SNK165051R0000	257
	1SNK165052R0000	259
	1SNK165061R0000	257
	1SNK165062R0000	259
	1SNK165071R0000	257
	1SNK165072R0000	259
	1SNK165081R0000	257
	1SNK165082R0000	259
	1SNK165091R0000	257
	1SNK165092R0000	259
	1SNK165102R0000	259
	1SNK166011R0000	257
	1SNK166012R0000	259
	1SNK166021R0000	257
	1SNK166022R0000	259
	1SNK166031R0000	257
	1SNK166032R0000	259
	1SNK166041R0000	257
	1SNK166042R0000	259
	1SNK166051R0000	257
	1SNK166052R0000	259
	1SNK166061R0000	257
	1SNK166062R0000	259
	1SNK166071R0000	257
	1SNK166072R0000	259
	1SNK166081R0000	257
	1SNK166082R0000	259
	1SNK166091R0000	257
	1SNK166092R0000	259
	1SNK166101R0000	257
	1SNK166102R0000	259
	1SNK166111R0000	257
	1SNK166112R0000	259
	1SNK166121R0000	257
	1SNK166122R0000	259
	1SNK166131R0000	257
	1SNK166132R0000	259
	1SNK166141R0000	257
	1SNK166142R0000	259
	1SNK166151R0000	257
	1SNK166152R0000	259
	1SNK166161R0000	257
	1SNK166162R0000	259
	1SNK166171R0000	257
	1SNK166172R0000	259
	1SNK166181R0000	257
	1SNK166182R0000	259
	1SNK166191R0000	257
	1SNK166192R0000	259
	1SNK166201R0000	257
	1SNK166202R0000	259
	1SNK166211R0000	257
	1SNK166212R0000	259
	1SNK166221R0000	257
	1SNK166222R0000	259
	1SNK166231R0000	258
	1SNK166232R0000	260
	1SNK166241R0000	258
	1SNK166242R0000	260
	1SNK166251R0000	258

Type	Part Number	Page
	1SNK166252R0000	260
	1SNK166261R0000	258
	1SNK166262R0000	260
	1SNK167001R0000	258
	1SNK167002R0000	260
	1SNK167011R0000	258
	1SNK167012R0000	260
	1SNK167021R0000	258
	1SNK167022R0000	260
	1SNK167031R0000	258
	1SNK167032R0000	260
	1SNK167041R0000	258
	1SNK167042R0000	260
	1SNK167051R0000	258
	1SNK167052R0000	260
	1SNK167061R0000	258
	1SNK167062R0000	260
	1SNK167071R0000	258
	1SNK167072R0000	260
	1SNK167081R0000	258
	1SNK167082R0000	260
	1SNK167091R0000	258
	1SNK167092R0000	260
	1SNK168001R0000	258
	1SNK168002R0000	260
	1SNK168011R0000	258
	1SNK168012R0000	260
	1SNK168021R0000	258
	1SNK168022R0000	260
	1SNK168031R0000	258
	1SNK168032R0000	260
	1SNK168041R0000	258
	1SNK168042R0000	260
	1SNK168051R0000	258
	1SNK168052R0000	260
	1SNK168061R0000	258
	1SNK168062R0000	260
	1SNK168071R0000	258
	1SNK168072R0000	260
	1SNK168091R0000	258
	1SNK168092R0000	260
	1SNK168101R0000	258
	1SNK168102R0000	260
	1SNK168111R0000	258
	1SNK168112R0000	260
	1SNK168121R0000	258
	1SNK168122R0000	260
	1SNK168131R0000	258
	1SNK168132R0000	260
	1SNK168141R0000	258
	1SNK168142R0000	260
	1SNK168151R0000	258
	1SNK168152R0000	260
	1SNK168161R0000	258
	1SNK168162R0000	260
	1SNK168171R0000	258
	1SNK168172R0000	260
	1SNK168181R0000	258
	1SNK168182R0000	260
	1SNK168192R0000	260
	1SNK168202R0000	260
	1SNK168212R0000	260
	1SNK168222R0000	260
	1SNK169001R0000	258
	1SNK169002R0000	260
	1SNK169011R0000	258
	1SNK169012R0000	260
	1SNK169999R0000	30
MC812-YL	1SNK160004R0000	256
MCLH	1SNK900630R0000	201
MCLH-R1	1SNK900631R0000	201
MCLH-R1-YL	1SNK900634R0000	201
MCLH-YL	1SNK900633R0000	201
MG2-ABM 991012	1SNB991012R0000	266
MG2-CKP 991670	1SNB991670R0000	266
MG2-CTB 991006	1SNB991006R0000	266
MG2-ETB 991016	1SNB991016R0000	244
MG2-ETR 991600	1SNB991600R0000	266
MG2-ETR 991601	1SNB991601R0000	266
MG2-ETR 991602	1SNB991602R0000	266
MG2-ETR 991603	1SNB991603R0000	266
MG2-ETR 991606	1SNB991606R0000	266
MG2-LTB 991013	1SNB991013R0000	266
MG2-MTB 991008	1SNB991008R0000	266
MG2-PLT 991002	1SNB991002R0000	266
MG2-PTD 991007	1SNB991007R0000	266
MG2-PTM 991010	1SNB991010R0000	261
MG2-PWC 991000	1SNB991000R0000	266
MG2-QTB 991011	1SNB991011R0000	266

Type	Part Number	Page
MG2-STB 991005	1SNB991005R0000	266
MG2-TCT 991562	1SNB991562R0000	266
MG2-TDMO-01 40340	1SNB040340R0412	261
MG2-TDMO-01 40341	1SNB040341R0416	261
MG2-TDMO-01 40390	1SNB040390R0412	261
MG2-TDMO-01 40391	1SNB040391R0416	261
MG2-TDMO-02 40440	1SNB040440R0412	261
MG2-TDMO-02 40441	1SNB040441R0416	261
MG2-TDMO-02 40490	1SNB040490R0412	261
MG2-TDMO-02 40491	1SNB040491R0416	261
MG2-TDMO-03 40540	1SNB040540R0412	261
MG2-TDMO-03 40541	1SNB040541R0416	261
MG2-TDMO-03 40590	1SNB040590R0412	261
MG2-TDMO-03 40591	1SNB040591R0416	261
MG2-TGT 991532	1SNB991532R0000	266
MG2-TLT 991522	1SNB991522R0000	266
MG2-TMT 991513	1SNB991513R0000	266
MG2-TST 991552	1SNB991552R0000	266
MG2-TTB 991512	1SNB991512R0000	266
MG2-TTD 991563	1SNB991563R0000	266
MG2-TWC 991502	1SNB991502R0000	266
MG2-TWT 991542	1SNB991542R0000	266
MG2-WTB 991004	1SNB991004R0000	266
MG3 KIT	1SNB419001R0000	244
MG-CPM 13 41740	1SNB041740R0512	244
MG-CPM 13 41741	1SNB041741R0612	250
MG-CPM 13 41790	1SNB041790R0512	21
MG-CPM 13 41791	1SNB041791R0612	30
MG-CPMFA 43196	1SNB043196R0012	185
MG-TAA 49148	1SNB049148R1735	201
MG-TAA 49198	1SNB049198R1735	201
MG-TAA 49448	1SNB049448R8530	201
MG-TAA 49498	1SNB049498R8530	201
MG-TAPW 49046	1SNB049046R0929	263
MG-TAPW 49096	1SNB049096R0929	263
MG-TAR 45194	1SNB045194R1735	201
MG-TAR 45490	1SNB045490R8530	201
MG-VYT 46415	1SNB046415R0615	217
MG-VYT 46915	1SNB046915R0615	217
PAM43020	1SNA235106R2600	230
PC5-10	1SNA113544R1200	105
PC5-2	1SNA113542R1000	105
PC8-10	1SNA163313R2400	155
PC81-10	1SNA173523R1100	120
PC8-2	1SNA116538R1700	226
PC8-3	1SNA116539R1000	226
PC8-4	1SNA116540R2500	226
PC8-R1	1SNA400711R0600	153
PC8-R2	1SNA400712R0700	155
PC8-R3	1SNA400713R0000	155
PC8-R4	1SNA400724R0300	155
PC8-R5	1SNA400842R0000	155
PC8-R6	1SNA400843R0000	155
PC8-R7	1SNA400849R0000	155
PC8-R8	1SNA400850R0000	155
PEN HOLDER	1SNA360098R1200	268
PG5	1SNK900401R0000	52
PG5-R1	1SNK900402R0000	52
PG5-R2	1SNK900403R0000	211
PIB2-TT	1SNA235155R2600	201
PIB2-TT-YL	1SNA235157R2000	201
PL10	1SNK900621R0000	85
PL16	1SNK900622R0000	87
PL5	1SNK900618R0000	80
PL6	1SNK900619R0000	81
PL8	1SNK900620R0000	84
PR3.G2	1SNA164800R0300	197
PR3.Z2	1SNA174300R1700	196
PR30	1SNA173220R0500	196
PR4	1SNA168500R1200	198
PR5	1SNA168700R2200	198
PR50	1SNA178529R0400	197
PS-3	1SNK900650R0000	213
PT-3	1SNK900625R0000	210
PT-ZD	1SNK900660R0000	185
RC1010	1SNA238000R1600	91
RCPEAD-TT	1SNA235158R0100	201
RCPEAD-TT-YL	1SNA235159R0200	201
RCPEB	1SNA178430R0500	201
RIB-B	1SNA235710R0600	265
RIB-R	1SNA235711R2300	265
RIB-RS	1SNA235718R0200	265
RILS	1SNK900627R0000	219
SC-JB8-2	1SNK900652R0000	152
SC-JB8-3	1SNK900653R0000	156
SC-JB8-3-OR	1SNK900657R0000	231
SC-JB8-4	1SNK900654R0000	156
SC-JB8-4-OR	1SNK900658R0000	231
SC-JB8-5	1SNK900655R0000	231

Index
Type classification

Type	Part Number	Page
SERVICE KIT FOR AMS 500	1SNA360162R1600	268
SHB	1SNK900602R0000	56
SHBP	1SNK900601R0000	21
SHBS	1SNK900600R0000	80
SPDST1	1SNA360163R1700	268
SPRC 1	1SNA360010R1500	268
SPRC 10	1SNA360020R1700	268
SPRC 11	1SNA360021R0400	268
SPRC 13	1SNA360023R0600	268
SPRC 14	1SNA360024R0700	268
SPRC 15	1SNA360025R0000	268
SPRC 16	1SNA360026R0100	268
SPRC 2	1SNA360011R1500	268
SPRC 21	1SNA360031R0600	264
SPRC 26	1SNA360036R0300	268
SPRC 27	1SNA360037R0400	268
SPRC 28	1SNA360040R2300	268
SPRC 29	1SNA360038R1500	268
SPRC 30-3	1SNA360039R1700	245
SPRC 4	1SNA360014R0500	268
SPRC 5	1SNA360015R0600	268
SPRC 6	1SNA360016R0700	268
SPRC 7	1SNA360017R0000	268
SPRC 8	1SNA360018R1100	268
SPRC 9	1SNA360019R1200	268
TC5	1SNK900200R0000	21
TC5-R1	1SNK900201R0000	21
TGA8	1SNA168672R1100	120
	1SNA168673R1200	120
	1SNA168674R1300	120
TO3.5-100-INS	1SNK900644R0000	213
TO3.5-50	1SNK900640R0000	213
TO3.5-50-A	1SNK900659R0000	213
TO4-100	1SNK900641R0000	213
TO5.5-125	1SNK900642R0000	213
TO6.5-150	1SNK900643R0000	213
TP2	1SNK900203R0000	30
TP4	1SNK900205R0000	30
UMH	1SNK900611R0000	30
VR-ZD	1SNK900637R0000	185
ZD2.5-11	1SNK805016R0000	172
ZD2.5-22	1SNK805017R0000	173
ZD2.5-22-PE	1SNK805156R0000	174
ZDK2.5-11	1SNK805015R0000	175
ZDK2.5-11-BL	1SNK805025R0000	175
ZDK2.5-11-PE	1SNK805150R0000	179
ZDK2.5-21	1SNK805014R0000	176
ZDK2.5-22	1SNK805010R0000	177
ZDK2.5-22-BL	1SNK805020R0000	177
ZDK2.5-22-PE	1SNK805152R0000	180
ZDK2.5-D1	1SNK805214R0000	182
ZDK2.5-D1-PE	1SNK805250R0000	184
ZDK2.5-D2	1SNK805213R0000	181
ZDK2.5-D2-BL	1SNK805223R0000	181
ZDK2.5-D2-PE	1SNK805212R0000	183
ZDK4-22	1SNK806010R0000	178
ZDS4-22	1SNK805013R0000	190
ZDS4-22-R1	1SNK806013R0000	192
ZK10	1SNK710010R0000	29
ZK10-3P	1SNK710011R0000	31
ZK10-3P-BL	1SNK710021R0000	31
ZK10-3P-PV	1SNK710064R0000	32
ZK10-3P-PV-BL	1SNK710067R0000	32
ZK10-BL	1SNK710020R0000	29
ZK10-OR	1SNK710030R0000	29
ZK10-PE	1SNK710150R0000	30
ZK10-PE-3P	1SNK710151R0000	32
ZK10-PV	1SNK710063R0000	30
ZK10-PV-BL	1SNK710065R0000	30
ZK16	1SNK712010R0000	33
ZK16-3P	1SNK712011R0000	35
ZK16-3P-BL	1SNK712021R0000	35
ZK16-3P-PV	1SNK712064R0000	36
ZK16-3P-PV-BL	1SNK712067R0000	36
ZK16-BL	1SNK712020R0000	33
ZK16-PE	1SNK712150R0000	34
ZK16-PE-3P	1SNK712151R0000	36
ZK16-PV	1SNK712063R0000	34
ZK16-PV-BL	1SNK712065R0000	34
ZK2.5	1SNK705010R0000	21
ZK2.5-3P	1SNK705011R0000	22
ZK2.5-3P-BK	1SNK705073R0000	22
ZK2.5-3P-BL	1SNK705021R0000	22
ZK2.5-3P-GN	1SNK705068R0000	22
ZK2.5-3P-OR	1SNK705031R0000	22
ZK2.5-3P-RD	1SNK705069R0000	22
ZK2.5-3P-WH	1SNK705072R0000	22
ZK2.5-3P-YL	1SNK705067R0000	22
ZK2.5-4P	1SNK705012R0000	23
ZK2.5-4P-BK	1SNK705080R0000	23
ZK2.5-4P-BL	1SNK705022R0000	23
ZK2.5-4P-GN	1SNK705075R0000	23
ZK2.5-4P-OR	1SNK705032R0000	23
ZK2.5-4P-RD	1SNK705076R0000	23
ZK2.5-4P-WH	1SNK705079R0000	23
ZK2.5-4P-YL	1SNK705074R0000	23
ZK2.5-BK	1SNK705066R0000	21
ZK2.5-BL	1SNK705020R0000	21
ZK2.5-CH-4P-LR	1SNK705710R0000	65
ZK2.5-CH-4P-RL	1SNK705711R0000	66
ZK2.5-D1	1SNK705211R0000	57
ZK2.5-D1-PE	1SNK705250R0000	56
ZK2.5-D2	1SNK705210R0000	56
ZK2.5-D2-BL	1SNK705220R0000	56
ZK2.5-D2-PE	1SNK705212R0000	58
ZK2.5-D-CH2-DU-RL	1SNK705219R0000	69
ZK2.5-D-CH-DU	1SNK705214R0000	68
ZK2.5-D-CH-UD	1SNK705213R0000	67
ZK2.5-GN	1SNK705061R0000	21
ZK2.5-L-L-PE	1SNK705512R0000	62
ZK2.5-L-N-PE	1SNK705513R0000	63
ZK2.5-OR	1SNK705030R0000	21
ZK2.5-PE	1SNK705150R0000	21
ZK2.5-PE-3P	1SNK705151R0000	22
ZK2.5-PE-4P	1SNK705152R0000	23
ZK2.5-RD	1SNK705062R0000	21
ZK2.5-S	1SNK705310R0000	49
ZK2.5-S-4P	1SNK705312R0000	50
ZK2.5-S-4P-BL	1SNK705321R0000	50
ZK2.5-S-4P-OR	1SNK705331R0000	50
ZK2.5-S-BL	1SNK705320R0000	49
ZK2.5-SF	1SNK706410R0000	51
ZK2.5-SF-R1	1SNK706411R0000	55
ZK2.5-SF-R3	1SNK706412R0000	55
ZK2.5-S-OR	1SNK705330R0000	49
ZK2.5-SP	1SNK705311R0000	52
ZK2.5-SP-4P	1SNK705313R0000	53
ZK2.5-S-R1	1SNK706310R0000	51
ZK2.5-T1	1SNK705511R0000	61
ZK2.5-T1-PE	1SNK705550R0000	60
ZK2.5-T3	1SNK705510R0000	60
ZK2.5-WH	1SNK705065R0000	21
ZK2.5-YL	1SNK705060R0000	21
ZK4	1SNK706010R0000	24
ZK4-3P	1SNK706011R0000	25
ZK4-3P-BL	1SNK706021R0000	25
ZK4-3P-OR	1SNK706031R0000	25
ZK4-4P	1SNK706012R0000	26
ZK4-4P-BL	1SNK706022R0000	26
ZK4-4P-OR	1SNK706032R0000	26
ZK4-BK	1SNK706066R0000	24
ZK4-BL	1SNK706020R0000	24
ZK4-OR	1SNK706030R0000	24
ZK4-PE	1SNK706150R0000	24
ZK4-PE-3P	1SNK706151R0000	25
ZK4-PE-4P	1SNK706152R0000	26
ZK4-RD	1SNK706062R0000	24
ZK4-YL	1SNK706060R0000	24
ZK6	1SNK708010R0000	27
ZK6-3P	1SNK708011R0000	28
ZK6-3P-BL	1SNK708021R0000	28
ZK6-3P-OR	1SNK708031R0000	28
ZK6-BK	1SNK708066R0000	27
ZK6-BL	1SNK708020R0000	27
ZK6-OR	1SNK708030R0000	27
ZK6-PE	1SNK708150R0000	27
ZK6-PE-3P	1SNK708151R0000	28
ZK6-RD	1SNK708062R0000	27
ZK6-YL	1SNK708060R0000	27
ZS10	1SNK508010R0000	84
ZS10-BK	1SNK508066R0000	84
ZS10-BL	1SNK508020R0000	84
ZS10-BR	1SNK508064R0000	84
ZS10-GN	1SNK508061R0000	84
ZS10-OR	1SNK508030R0000	84
ZS10-PE	1SNK508150R0000	84
ZS10-PE-R1	1SNK508151R0000	153
ZS10-PR	1SNK508063R0000	84
ZS10-R1	1SNK508011R0000	152
ZS10-RD	1SNK508062R0000	84
ZS10-S	1SNK508315R0000	111
ZS10-S-BL	1SNK508320R0000	111
ZS10-SF	1SNK508418R0000	133
ZS10-SF-R1	1SNK508421R0000	134
ZS10-SF-R3	1SNK508422R0000	134
ZS10-SP	1SNK508316R0000	116
ZS10-S-R2	1SNK508417R0000	135
ZS10-ST	1SNK508310R0000	154
ZS10-ST-1	1SNK508312R0000	152
ZS10-ST-T4	1SNK508311R0000	152
ZS10-WH	1SNK508065R0000	84
ZS10-YL	1SNK508060R0000	84
ZS150	1SNK531010R0000	91
ZS150-BL	1SNK531020R0000	91
ZS150-YL	1SNK531060R0000	91
ZS16	1SNK510010R0000	85
ZS16-BL	1SNK510020R0000	85
ZS16-OR	1SNK510030R0000	85
ZS16-PE	1SNK510150R0000	85
ZS240	1SNK536010R0000	92
ZS240-BL	1SNK536020R0000	92
ZS240-YL	1SNK536060R0000	92
ZS25	1SNK512010R0000	86
ZS25-BL	1SNK512020R0000	86
ZS25-PE	1SNK512150R0000	86
ZS25-YL	1SNK512060R0000	86
ZS35	1SNK516010R0000	87
ZS35-BL	1SNK516020R0000	87
ZS35-OR	1SNK516030R0000	87
ZS35-PE	1SNK516150R0000	87
ZS35-PEN	1SNK516170R0000	101
ZS4	1SNK505010R0000	80
ZS4-BK	1SNK505066R0000	80
ZS4-BL	1SNK505020R0000	80
ZS4-BR	1SNK505064R0000	80
ZS4-D1	1SNK505211R0000	137
ZS4-D2	1SNK505210R0000	136
ZS4-D2-BL	1SNK505220R0000	136
ZS4-D2-OR	1SNK505230R0000	136
ZS4-D2-S	1SNK505315R0000	142
ZS4-D2-SF1	1SNK508425R0000	144
ZS4-D2-SF1-R1	1SNK508423R0000	145
ZS4-D2-SF1-R3	1SNK508424R0000	145
ZS4-D2-S-T2	1SNK505316R0000	143
ZS4-D-CH-DU	1SNK505215R0000	149
ZS4-D-CH-UD	1SNK505214R0000	148
ZS4-GN	1SNK505061R0000	80
ZS4-OR	1SNK505030R0000	80
ZS4-PE	1SNK505150R0000	80
ZS4-PE-R2	1SNK506153R0000	131
ZS4-PR	1SNK505063R0000	80
ZS4-R1	1SNK508013R0000	124
ZS4-R2	1SNK506013R0000	130
ZS4-RD	1SNK505062R0000	80
ZS4-S	1SNK505310R0000	105
ZS4-S-BL	1SNK505320R0000	105
ZS4-SF	1SNK506410R0000	126
ZS4-SF1	1SNK508410R0000	120
ZS4-SF1-OR	1SNK508430R0000	120
ZS4-SF1-R1	1SNK508412R0000	122
ZS4-SF1-R2	1SNK508413R0000	123
ZS4-SF1-R3	1SNK508414R0000	122
ZS4-SF1-R4	1SNK508415R0000	123
ZS4-SF1-T2	1SNK508411R0000	121
ZS4-SF-R1	1SNK506412R0000	128
ZS4-SF-R2	1SNK506413R0000	129
ZS4-SF-R3	1SNK506415R0000	128
ZS4-SF-R4	1SNK506416R0000	129
ZS4-SF-T2	1SNK506411R0000	127
ZS4-S-OR	1SNK505330R0000	105
ZS4-SP	1SNK505313R0000	112
ZS4-SP-R1	1SNK506313R0000	114
ZS4-SP-T2	1SNK505314R0000	113
ZS4-SP-T2-R1	1SNK506314R0000	115
ZS4-S-R1	1SNK506310R0000	107
ZS4-S-R1-BL	1SNK506320R0000	107
ZS4-S-R1-OR	1SNK506330R0000	107
ZS4-S-R2	1SNK506414R0000	132
ZS4-S-R3	1SNK508416R0000	125
ZS4-S-R3-T2	1SNK508419R0000	125
ZS4-S-T2	1SNK505311R0000	106
ZS4-S-T2.3	1SNK505312R0000	106
ZS4-S-T2.3-R1	1SNK506312R0000	108
ZS4-S-T2-BL	1SNK505321R0000	106
ZS4-S-T2-OR	1SNK505331R0000	106
ZS4-S-T2-R1	1SNK506311R0000	108
ZS4-S-T2-R1-BL	1SNK506321R0000	108
ZS4-S-T2-R1-OR	1SNK506331R0000	108
ZS4-T3	1SNK505212R0000	146
ZS4-T3-R1	1SNK506213R0000	147
ZS4-WH	1SNK505065R0000	80
ZS4-YL	1SNK505060R0000	80
ZS50	1SNK516011R0000	88
ZS50-BK	1SNK516064R0000	88
ZS50-BL	1SNK516021R0000	88
ZS50-PE	1SNK516151R0000	88
ZS50-RD	1SNK516063R0000	88

Index
Type classification

Type	Part Number	Page
ZS50-YL	1SNK516060R0000	88
ZS6	1SNK506010R0000	81
ZS6-3S	1SNK506011R0000	82
ZS6-3S-BL	1SNK506021R0000	82
ZS6-3S-PE	1SNK506151R0000	82
ZS6-3S-YL	1SNK506067R0000	82
ZS6-4S	1SNK506012R0000	83
ZS6-4S-BL	1SNK506022R0000	83
ZS6-4S-PE	1SNK506152R0000	83
ZS6-4S-YL	1SNK506068R0000	83
ZS6-BK	1SNK506066R0000	81
ZS6-BL	1SNK506020R0000	81
ZS6-BR	1SNK506064R0000	81
ZS6-D1	1SNK506211R0000	139
ZS6-D1-PE	1SNK506250R0000	138
ZS6-D1-RD	1SNK506214R0000	139
ZS6-D2	1SNK506210R0000	138
ZS6-D2-BK	1SNK506266R0000	138
ZS6-D2-BL	1SNK506220R0000	138
ZS6-D2-OR	1SNK506230R0000	138
ZS6-D2-PE	1SNK506212R0000	140
ZS6-D2-RD	1SNK506262R0000	138
ZS6-D2-WH	1SNK506265R0000	138
ZS6-D2-YL	1SNK506260R0000	138
ZS6-GN	1SNK506061R0000	81
ZS6-OR	1SNK506030R0000	81
ZS6-PE	1SNK506150R0000	81
ZS6-PR	1SNK506063R0000	81
ZS6-RD	1SNK506062R0000	81
ZS6-S	1SNK506315R0000	109
ZS6-S-4S-T2	1SNK506316R0000	110
ZS6-S-BL	1SNK506322R0000	109
ZS6-WH	1SNK506065R0000	81
ZS6-YL	1SNK506060R0000	81
ZS70	1SNK522010R0000	89
ZS70-BL	1SNK522020R0000	89
ZS70-PE	1SNK522150R0000	89
ZS70-YL	1SNK522060R0000	89
ZS95	1SNK526010R0000	90
ZS95-BL	1SNK526020R0000	90
ZS95-PE	1SNK526150R0000	90
ZS95-YL	1SNK526060R0000	90

Notes

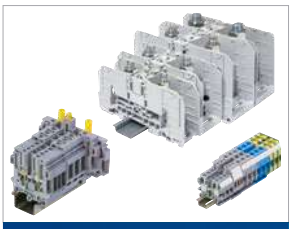

DEDICATED APPLICATIONS TERMINAL BLOCKS

IDC, spring loaded, stud, screw, spring, pluggable technologies

ENTRELEC Terminal Blocks

ENTRELEC Terminal blocks

TE Connectivity proposes one of the largest Din Rail Terminal block offering on the market with various technologies: screw, PI-Spring, spring, IDC, pluggable, stud, etc. found in over 8000 products & solutions.

You can access to more product details, use the order code or the product type in our web site: te.com

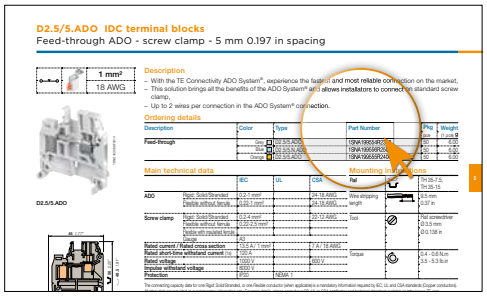

Connect to

1SNC160065S0201

Dedicated applications

Terminal blocks

Connection devices offering 2

ADO System® IDC terminal blocks 11

Spring loaded screw clamp terminal blocks 59

Stud terminal blocks 71

Ring lug terminal blocks 99

Miniblocks 109

Test & measurement terminal blocks 153

Pluggable terminal blocks 173

Sensors / Actuators terminal blocks 189

Installation terminal blocks 207

Protection terminal blocks 237

Disconnect terminal blocks 243

Component holder terminal blocks 251

Index 265

1SNC160065S0201

1-1773977-3_EN - Edition February 2020

TE Connectivity proposes one of the largest Din Rail Terminal block offering on the market with various technologies: screw, PI-Spring, spring, IDC, pluggable, stud, etc. found in over 8000 products & solutions.

	SNK terminal blocks		Dedicated applications terminal blocks		Terminal blocks for railway applications
			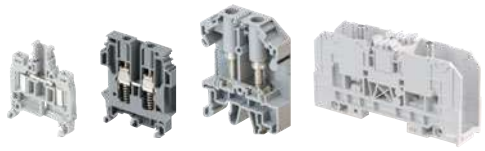		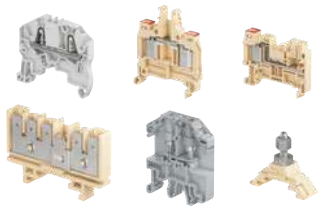
Scope	Qualified for worldwide applications and severe environments (such as hazardous locations, railways, marine and solar applications..). From 0.2 to 300 mm².		Specific terminal blocks and technologies for dedicated applications and markets.		The largest offering on the market for rolling stock and infrastructures.
Product families & functions	SNK PI-Spring technology 2.5 to 16 mm² 12 to 4 AWG	Feed-through Multi-deck Ground Disconnect for fuses Component holder	ADO System® (IDC) 0.22 to 4 mm² 24 to 12 AWG	ADO-ADO or ADO-screw clamp Feed-through / Multi-deck / Ground / Disconnect / for fuses / Component holder	SNK PI-Spring technology 2.5 to 16 mm² 12 to 4 AWG
			Safety (spring loaded) 0.22 to 10 mm² 24 to 6 AWG	Feed-through Disconnect Test & measurement	SNK pluggable screw & PI-Spring technologies 2.5 to 4 mm² 12 to 10 AWG
	SNK screw clamp technology 4 to 240 mm² 12 to 500 Kcmil	Feed-through Multi-deck Ground Disconnect for fuses Test & measurement Marshalling Component holder	Stud 25 to 300 mm² 4 AWG to 1000 Kcmil	One stud 2 studs One stud - One screw clamp	ADO System® (IDC) 1.5 to 4 mm² 16 to 12 AWG
			Ring lug 6 to 16 mm² 8 to 6 AWG	Feed-through Test & measurement	Stud 4 to 185 mm²
	SNK pluggable screw & PI-Spring technologies 2.5 to 4 mm² 12 to 10 AWG	Feed-through Multi-deck Ground	Miniblocks 1.5 to 6 mm² 18 to 8 AWG	Screw clamp Spring ADO System® (IDC)	Quick-connect 2.5 to 6 mm²
			Other types Test & measurement: with sliding link, blade, plug Pluggable: feed-through, double deck, disconnect Sensors/actuators: screw, spring, ADO system (IDC) Installation: screw, spring Protection: ground + neutral Component holders: screw, spring, ADO system (IDC)		

www.te.com

	DBL power distribution blocks	ESSAILEC® test blocks	Interfast PLC pre-wiring system	Marking solutions
	The preferred choice for primary power distribution and solar applications.	Test blocks for safe and easy testing on secondary circuits of current and voltage transformers and sensors.	PLC pre-wiring system for fast, flexible, reliable connection of PLC's in process automation applications.	Markers & marking systems for all identification requirements in electrical panels.
	From 80 A up to 550 A (IEC) Modular blocks: single pole, three & four poles, up to 12 outputs Terminal blocks types: 2 to 10 poles, up to 20 outputs	Current and voltage sockets & plugs Simultaneous testing of 1 to 4 independent circuits on the same socket Several testing principle such as "make before break" for safe current transformer testing Panel and switchboard mounting : base, flush, rack, TH35 rail Multicircuits sockets & plugs	Interfast PCB: Compact & standard modules Interfast MS: Modular system based on terminal block technology Functions: – 1 to 4 wire connections (sensors) – Disconnect – Fuse – Signal indication – Relays – Optocouplers – Solenoid valve control – Galvanic isolation (2.5 kV).	Terminal block identification and group markers Wire and cable identification Component and equipment identification Panel identification Pre-printed markers for terminal blocks

1SNC160261S0201

Screw clamp technology
The heavy duty connection

Unique design, flies over time thanks to its reliability and safety
The TE Connectivity screw clamp technology is designed to avoid accidental releases due to vibrations, shocks or even abusive cable draw. Our exclusive design minimizes the needs of retightening campaigns.

High density capacity
The screw clamp technology can fit up to two conductors per clamp which offers extended possibilities in electrical cabinets.

Features

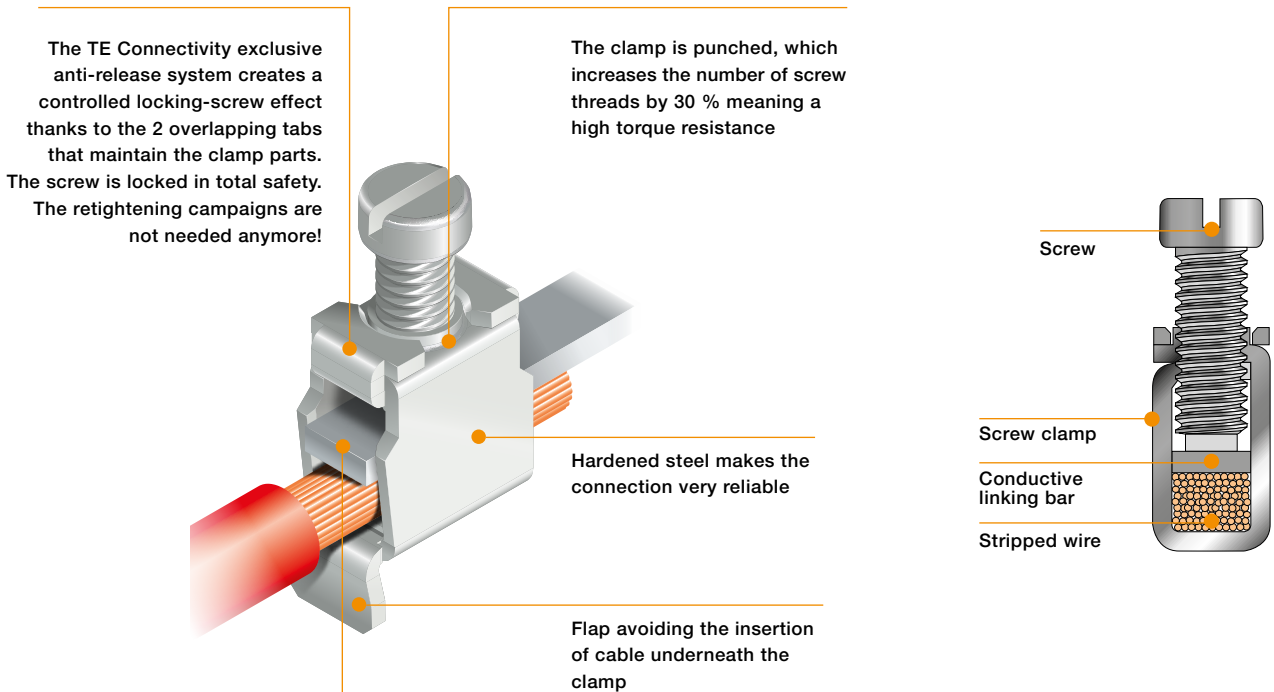

From 0.22 mm² up to 240 mm²
From 24 AWG up to 500 Kcmil

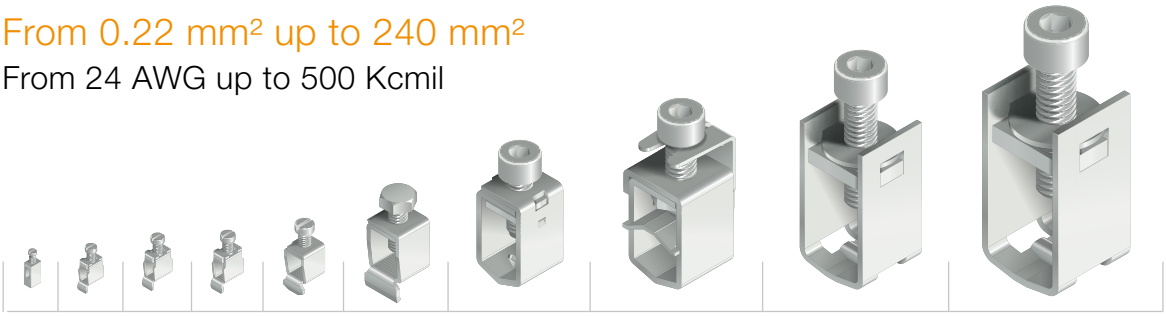

1SNC161117S0201

TE Connectivity spring loaded screw clamp technology

The safety connection for demanding working conditions

Exclusive design provide robustness and connection safety

The TE Connectivity screw clamp spring loaded terminal is designed to guarranty electrical continuity even when screw are loosened unintentionally.
It features all the benefits of our screw clamp with additional vibration,shock resistant and maintenance free performances.

High density wiring

The screw clamp spring loaded terminal can fit up to two conductors equipped with bent ferrules per clamp.

Features

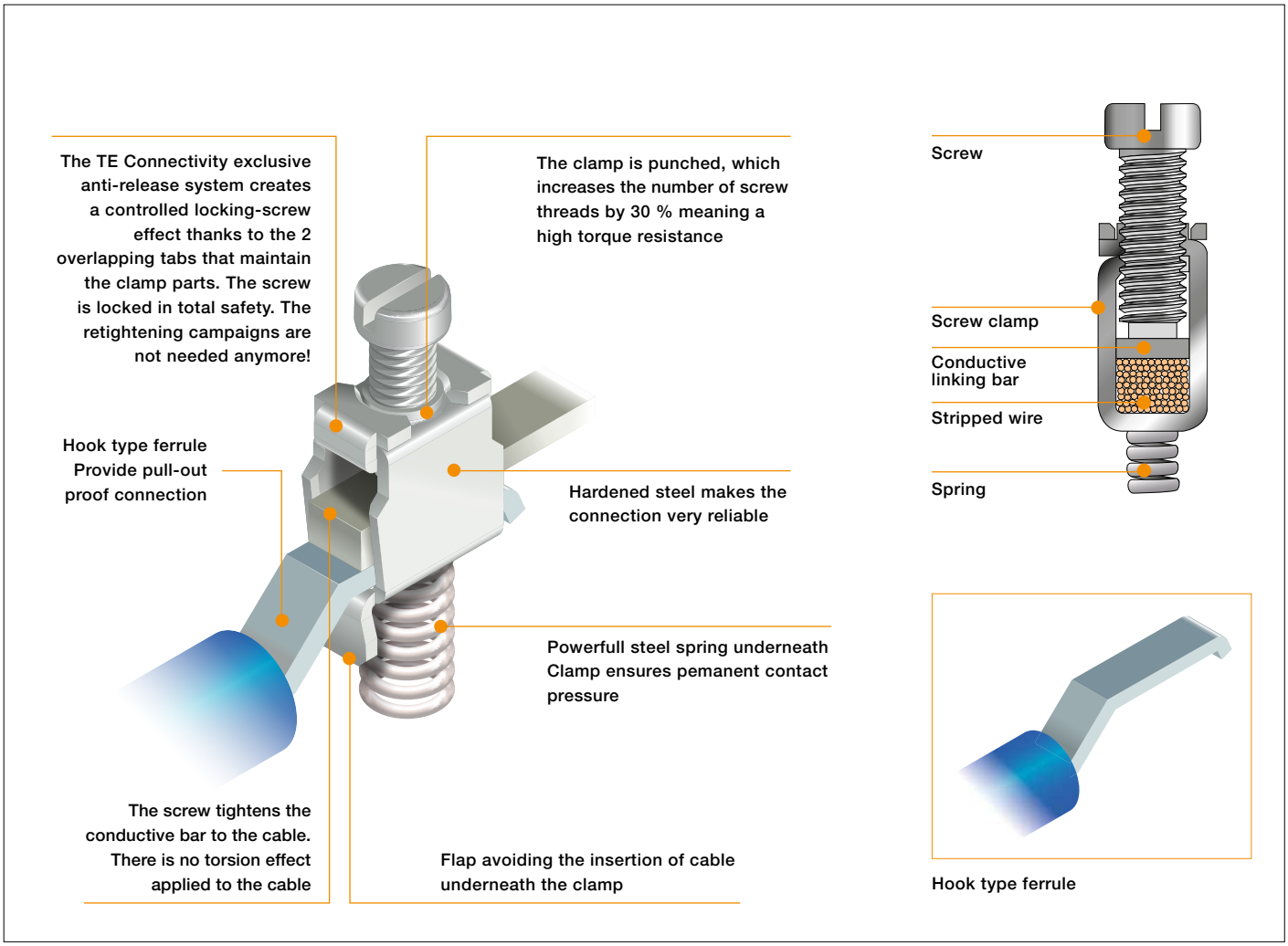

From 0.22 mm² up to 10 mm²

From 24 AWG up to 6 AWG

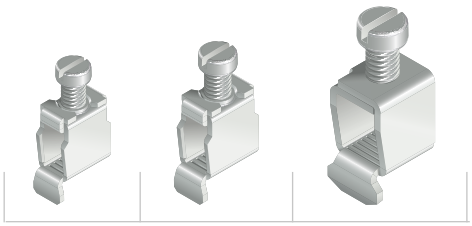

1SNC161123S0201_dupli

Experience the flexible connection

The TE Connectivity spring clamp technology combines all the features appreciated from electrical users by combining flexibility of use with front entry, a good vibration withstand, clamping pressure non dependent on the operator and automatic creeping compensation suppressing the needs of retightening campaigns.

Features

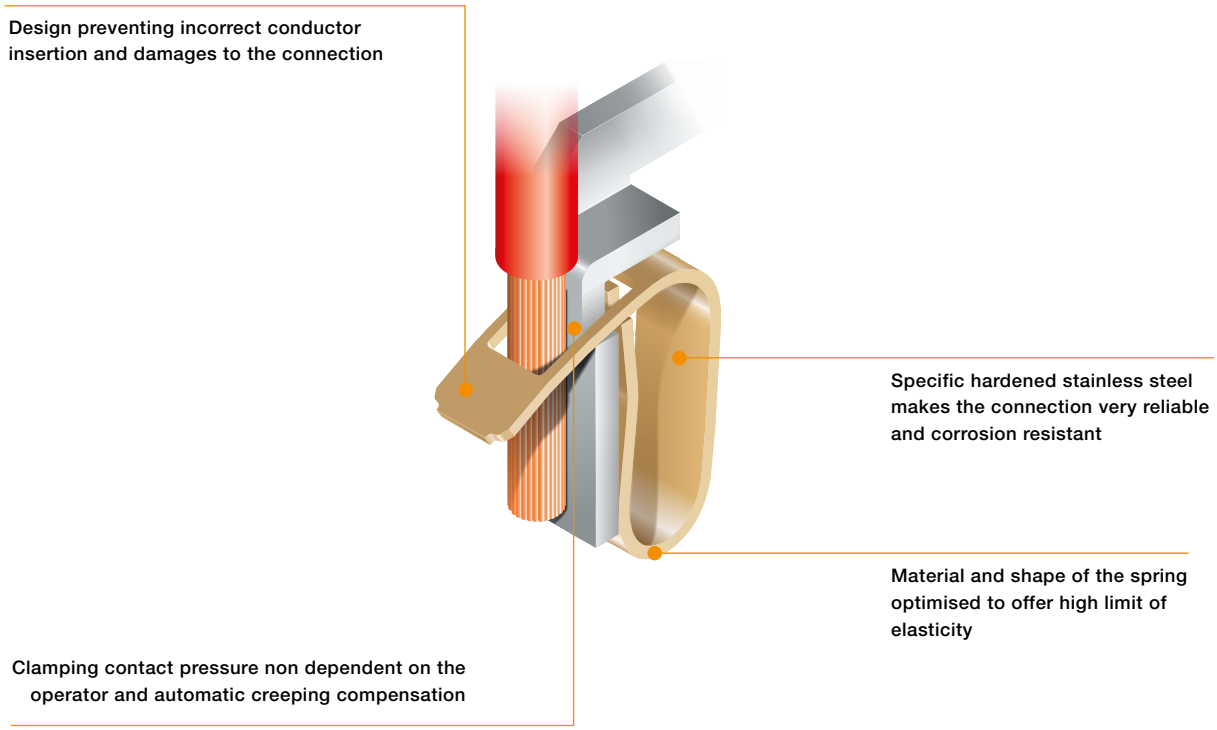

From 0.12 mm² up to 35 mm²

From 26 AWG up to 2 AWG

1SNC162112S0201

ADO System® IDC technology

The fastest and most reliable connection technology

ADO system® is based on Insulation Displacement Connection (IDC) technology. IDC technology can be found in various applications outside the electrical word. (RJ45 connectors used in Telecom for instance).

Our ADO system® features one single piece which (when associated with its dedicated tool) combines the wire preparation and the wire connection. Its design is made to connect up to two conductors (standard wires as well as special wires) in the same jaw.

1

Features

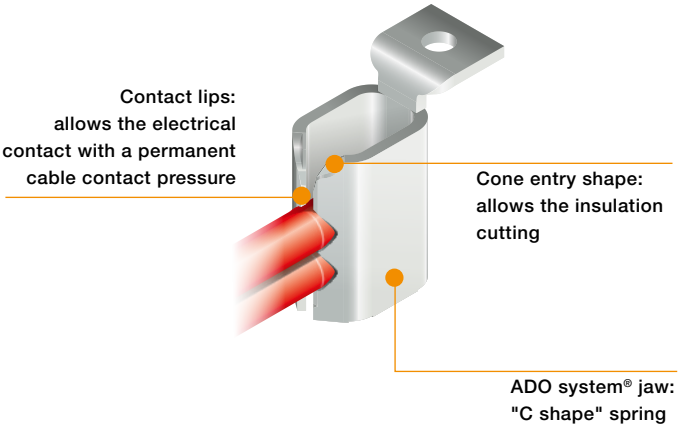

Corrosion proof

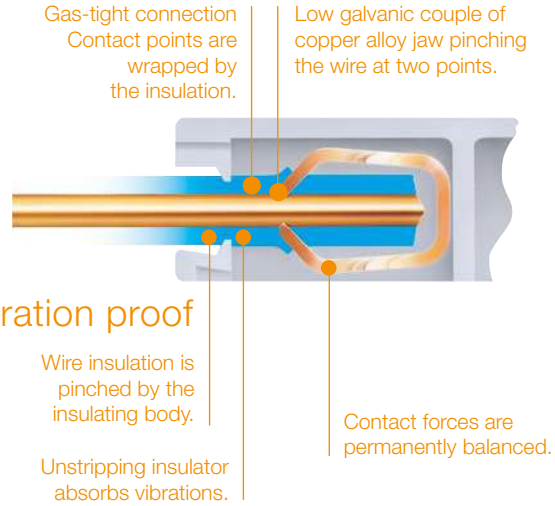

Instructions:

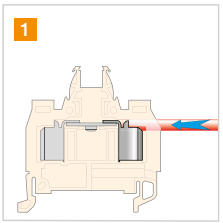

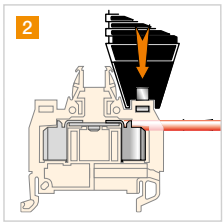

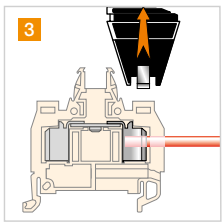

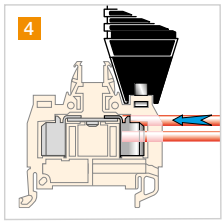

Two conductors

1 Insert the wire (not stripped) in the ADO System® jaw until it butts.
2 Position the tool in the recess and pull the trigger fully and release it.
3 Remove the trigger. (the tool will not be released if the connection is not completed).

4 Follow the same process if a second wire has to be connected (same size and same nature).
The first wire preliminary installed, will remain perfectly and safely maintained in the clamp during the second wire cabling process.

From 0.22 mm² up to 4 mm²

From 24 AWG up to 12 AWG

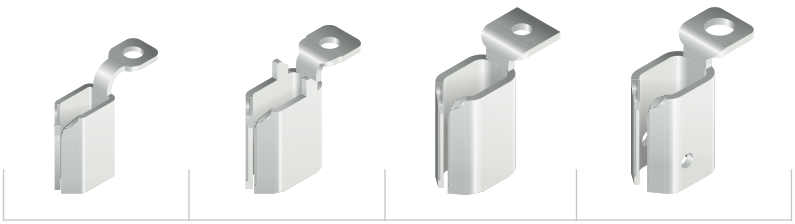

1SNC163080S0201_dupli

TE Connectivity Stud technology
The connection for power and energy circuits

Reliability first

Stud technology is designed to ensure a reliable connection thanks to the combination of:

- Vibration resistant equipments (nuts, washers),
- Lugs crimped on the cable provide pull-out proof termination.

This technology is very popular on the American market and particularly in the energy applications.

Available configurations

One stud

Two studs

One screw clamp / one stud

Connection technics

Up to 300 mm² / 1 000 Kcmil

M4-M5	M6	M8	M10	M12	M16
6 mm²	**35 mm²**	**70 mm²**	**120 mm²**	**185 mm²**	**300 mm²**
8 AWG	1 AWG	000 AWG	300 Kcmil	500 Kcmil	1 000 Kcmil

1SNC165028S0201_dupli

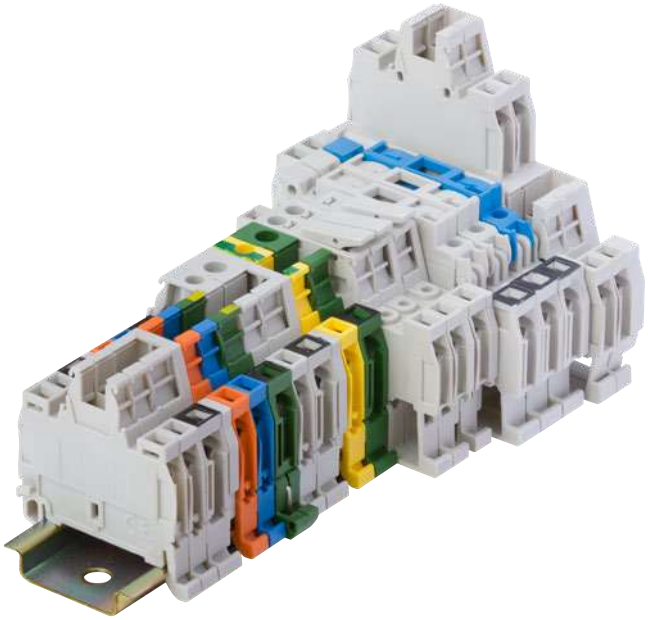

1SNC163102S0201

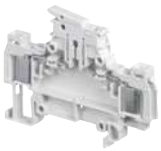

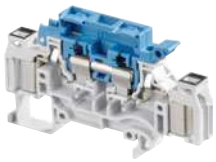

Technologies presentation		12
Overview		14

ADO / screw clamp

Feed-through

1 mm² / 18 AWG	**D2.5/5.ADO**	17
1.5 mm² / 16 AWG	**D4/6.ADO**	18
2.5 mm² / 14 AWG	**D6/8.ADO**	20
4 mm² / 12 AWG	**D6/8.ADO3**	22

Ground

1 mm² / 18 AWG	**D2.5/5.P.ADO**	23
1.5 mm² / 16 AWG	**D4/6.P.ADO**	24
2.5 mm² / 14 AWG	**D6/8.P.ADO**	25
4 mm² / 12 AWG	**D6/8.P.ADO3**	26

Double deck

1.5 mm² / 16 AWG	**D4/6.D2.ADO**	27
2.5 mm² / 14 AWG	**D6/8.D2.ADO**	28

Disconnect with blade

1 mm² / 18 AWG	**D2.5/5.SN.ADO**	29
1.5 mm² / 16 AWG	**D4/6.SN.ADO**	31
2.5 mm² / 14 AWG	**D4/8.SN.ADO**	33

For 5 x 20 and 5 x 25 mm fuse (0.197 x 0.787 in and 0.197 x 0.984 in)

1.5 mm² / 16 AWG	**D4/8.SF...I.ADO**	34 to 36
2.5 mm² / 14 AWG	**D4/8.SF...I.ADO2**	37 to 38

Disconnect with lever

1.5 mm² / 16 AWG	**D4/8.SN...I.ADO**	39
2.5 mm² / 14 AWG	**D4/8.SN...I.ADO2**	40

ADO / ADO

Feed-through

1 mm² / 18 AWG	**D1/5.ADO**	41
1.5 mm² / 16 AWG	**D1.5/6.ADO**	42
2.5 mm² / 14 AWG	**D2.5/8.ADO**	43
4 mm² / 12 AWG	**D4/8.ADO**	44

Ground

1 mm² / 18 AWG	**D1/5.P.ADO**	45
1.5 mm² / 16 AWG	**D1.5/6.P.ADO**	46
2.5 mm² / 14 AWG	**D2.5/8.P.ADO**	47
4 mm² / 12 AWG	**D4/8.P.ADO**	48

Double deck

1.5 mm² / 16 AWG	**D1.5/6.D2.ADO**	49

Disconnect with blade

1 mm² / 18 AWG	**D1/5.SNT2.ADO**	50
1.5 mm² / 16 AWG	**D1.5/6.SNT2.ADO**	51
2.5 mm² / 14 AWG	**D2.5/8.SNT2.ADO**	52

For 5 x 20 and 5 x 25 mm fuse (0.197 x 0.787 in and 0.197 x 0.984 in)

1.5 mm² / 16 AWG	**D1.5/8.SF.ADO**	53 to 54
2.5 mm² / 14 AWG	**D2.5/8.SF.ADO2**	55 to 56

Disconnect with lever

2.5 mm² / 14 AWG	**D4/8.SNNT.ADO2**	57

1SNC163102S0201

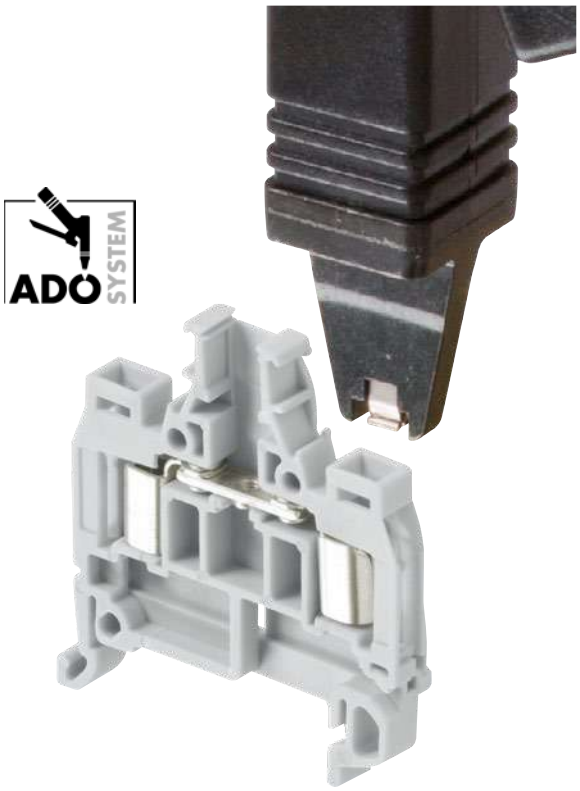

Rely on our expertise

With ADO System®, TE Connectivity is the leader
in IDC technology since 25 years.
More than 4000 customers worldwide are using this technology with sucess in the most severe environments.

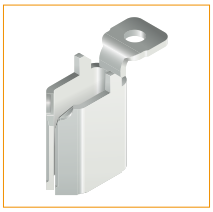

Qualified for worldwide markets and applications
Eco-designed according to international environmental standards in sustainable development.

RoHS ISO 9001

Experience the fastest and the most reliable connection on the market

Secure your connection process
Tool is **locked** on terminal block **during all connection process.** The conductor requires **no preparation** (no stripping, no ferrule). **Maintenance free** (screwless connection).
No fatigue thanks to the use of automatic tool.
Well adapted to special cables.

Speed up your wiring process and reduce time to market!
Reduce wiring time up to 80 % compare to a screw connection with ferrules.
High speed Connection process: **less than 3 seconds!**
No preparation of cable, no tightening, no use of ferrules.
Pneumatic tool available for even faster process.

Trust ADO System® reliability in any environments
ADO System® technology provides **superior performances** and is the best solution for installations with **severe** constraints (continuity of service, clearance for work) as well as strong environmental requirements (**vibrations,corrosion**)
This is the reason why today ADO System® is successfully used in **chemical/petrochemical, traction, waste water treatment** environments.

Connection process secured:
Tool locked on terminal blocks, high speed connection

1SNC163079S0201

ADO System® IDC technology

The fastest and most reliable connection technology

ADO System® is based on Insulation Displacement Connection (IDC) technology. IDC technology can be found in various applications outside the electrical word. (RJ45 connectors used in Telecom for instance).

Our ADO System® features one single piece which (when associated with its dedicated tool) combines the wire preparation and the wire connection. Its design is made to connect up to two conductors (standard wires as well as special wires) in the same jaw.

Features

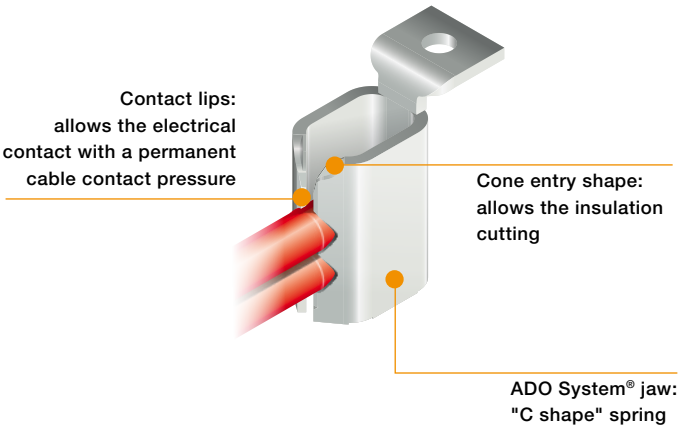

Corrosion proof

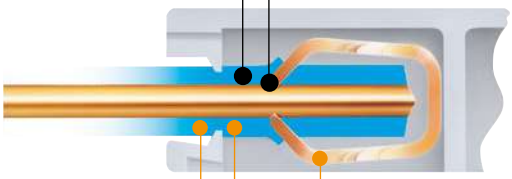

Vibration proof

Wire insulation is pinched by the insulating body.

Unstripping insulator absorbs vibrations.

Contact forces are permanently balanced.

Instructions:

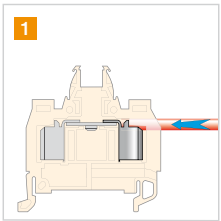

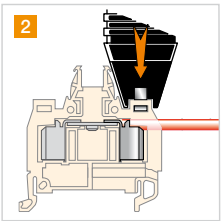

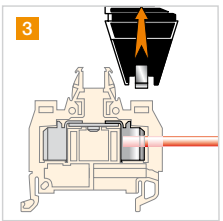

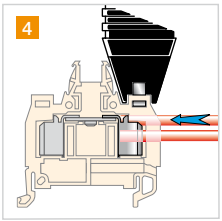

Two conductors

1 Insert the wire (not stripped) in the ADO System® jaw until it butts.
2 Position the tool in the recess and pull the trigger fully and release it.
3 Remove the trigger. (the tool will not be released if the connection is not completed).

4 Follow the same process if a second wire has to be connected (same size and same nature).
The first wire preliminary installed, will remain perfectly and safely maintained in the clamp during the second wire cabling process.

From 0.22 mm² up to 4 mm²

From 24 AWG up to 12 AWG

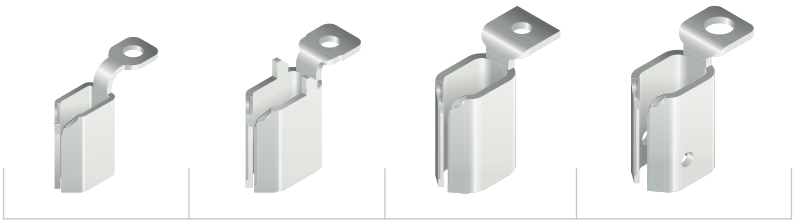

1SNC163080S0201

ADO / screw clamp

Feed-through

Ground

Double deck

Section IEC	UL/CSA*						
1 mm²	18 AWG	D2.5/5.ADO	5 mm 0.197 in	D2.5/5.P.ADO	5 mm 0.197 in		
1.5 mm²	16 AWG	D4/6.ADO	6 mm 0.236 in	D4/6.P.ADO	6 mm 0.236 in	D4/6.D2.ADO	6 mm 0.236 in
2.5 mm²	14 AWG	D6/8.ADO	8 mm 0.315 in	D6/8.P.ADO	8 mm 0.315 in	D6/8.D2.ADO	8 mm 0.315 in
4 mm²	12 AWG	D6/8.ADO3	8 mm 0.315 in	D6/8.P.ADO3	8 mm 0.315 in		

(*) For indication only, refer to product page for certified crosse section.

ADO / ADO

Feed-through

Ground

Double deck

Section IEC	UL/CSA*						
1 mm²	18 AWG	D1/5.ADO	5 mm 0.197 in	D1/5.P.ADO	5 mm 0.197 in		
1.5 mm²	16 AWG	D1.5/6.ADO	6 mm 0.236 in	D1.5/6.P.ADO	6 mm 0.236 in	D1.5/6.D2.ADO	6 mm 0.236 in
2.5 mm²	14 AWG	D2.5/8.ADO	8 mm 0.315 in	D2.5/8.P.ADO	8 mm 0.315 in		
4 mm²	12 AWG	D4/8.ADO	8 mm 0.315 in	D4/8.P.ADO	8 mm 0.315 in		

(*) For indication only, refer to product page for certified crosse section.

Complementary functions: see related chapters in this catalog

Miniblocks

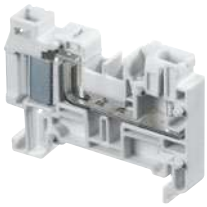

Pluggable

1SNC163081S0201

Disconnect with blade

D2.5/5.SN.ADO	5 mm 0.197 in
D4/6.SN.ADO	6 mm 0.236 in
D4/8.SN.ADO	8 mm 0.315 in

Fuse

D4/8.SF...I.ADO	8 mm 0.315 in
D4/8.SF...I.ADO2	8 mm 0.315 in

Disconnect with lever

D4/8.SN...I.ADO	8 mm 0.315 in
D4/8.SN...I.ADO2	8 mm 0.315 in

Disconnect with blade

D1/5.SNT2.ADO	5 mm 0.197 in
D1.5/6.SNT2.ADO	6 mm 0.236 in
D2.5/8.SNT2.ADO	8 mm 0.315 in

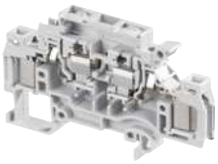

Fuse

D1.5/8.SF.ADO	8 mm 0.315 in
D2.5/8.SF.ADO2	8 mm 0.315 in

Disconnect with lever

D1.5/8.SNN.ADO	8 mm 0.315 in
D2.5/8.SNNT.ADO2	8 mm 0.315 in

Sensors / actuators

Component holders

1SNC163081S0201

D2.5/5.ADO IDC terminal blocks

Feed-through ADO - screw clamp - 5 mm 0.197 in spacing

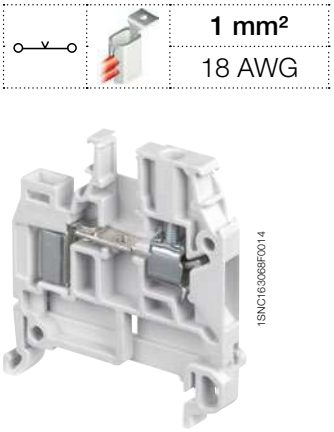

D2.5/5.ADO

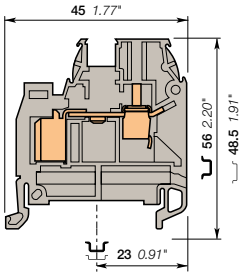

5 mm 0.197 in spacing

1 mm²
18 AWG

Description

- With the TE Connectivity ADO System®, experience the fastest and most reliable connection on the market,
- This solution brings all the benefits of the ADO System® and allows installators to connect on standard screw clamp,
- Up to 2 wires per connection in the ADO System® connection.

Ordering details

Description	Color	Type	Part Number	Pkg pce	Weight (1 pce) g
Feed-through	Grey	D2.5/5.ADO	1SNA199554R2300	50	6.00
	Blue	D2.5/5.N.ADO	1SNA199556R2500	50	6.00
	Orange	D2.5/5.ADO	1SNA199555R2400	50	6.00

Main technical data

		IEC	UL	CSA
ADO	Rigid: Solid/Stranded	0.2-1 mm²		24-18 AWG
	Flexible without ferrule	0.22-1 mm²		24-18 AWG
Screw clamp	Rigid: Solid/Stranded	0.2-4 mm²		22-12 AWG
	Flexible without ferrule	0.22-2.5 mm²		
	Flexible with insulated ferrule			
	Gauge	A3		
Rated current / Rated cross section		13.5 A / 1 mm²		7 A / 18 AWG
Rated short-time withstand current (1s)		120 A		
Rated voltage		1000 V		600 V
Impulse withstand voltage		8000 V		
Protection		IP20	NEMA 1	

Mounting instructions

Rail	TH 35-7.5, TH 35-15
Wire stripping length	9.5 mm 0.37 in
Tool	Flat screwdriver Ø 3.5 mm Ø 0.138 in
Torque	0.4 - 0.6 N.m 3.5 - 5.3 lb.in

The connecting capacity data for one Rigid: Solid/Stranded, or one Flexible conductor (when applicable) is a mandatory information required by IEC, UL and CSA standards (Copper conductors). All other data are provided as supplementary information only. For more details, please consult our CB, UL or CSA certificates and technical datasheet available on http://www.TE.com

RoHS RoHS | cCSAus | Gost R

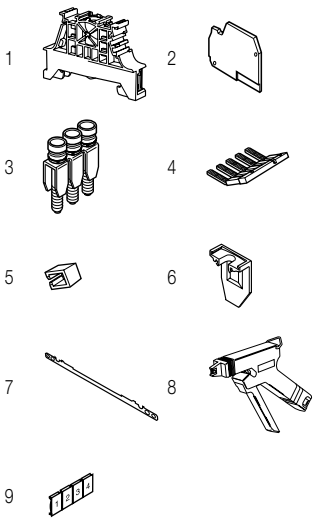

Accessories

	Description			Color	Type	Part Number	Pkg pce	Weight (1 pce) g
1	End stops	10 mm	0.394 in	Dark grey	BAM4	1SNK900001R0000	50	14.00
		5.2 mm	0.205 in		BAZ1	1SNK900002R0000	50	5.30
2	End sections	3 mm	0.118 in	Grey	FEDAD1	1SNA199336R2000	20	2.50
3	Jumper bars	2 poles	24 A		BJMI5-2	1SNA176278R1600	10	3.30
		3 poles			BJMI5-3	1SNA176279R1700	10	5.00
		4 poles			BJMI5-4	1SNA176280R0500	10	6.70
		5 poles			BJMI5-5	1SNA176281R2200	10	8.40
		10 poles			BJMI5-10	1SNA176282R2300	10	16.90
4	Lateral jumper bars	2 poles	30 A	Grey	PC5-2	1SNA113542R1000	10	1.80
		10 poles			PC5-10	1SNA113544R1200	10	6.00
5	Insulating tips	For lateral jumper bars type PC...			EIP	1SNA113550R2400	10	
6	Circuit separators	0 mm	0 in	Grey	SCAD5	1SNA199551R2000	10	0.30
7	Shield connectors				CBM5	1SNA178745R1400	50	
8	Tools	Semi automatic tool			OUPAD	1SNA178944R0400	1	205.00
		Hand tool			OUMAD	1SNA179466R0600	1	29.00
9	Terminal block markers	Blank card		White	RC510	1SNA231000R0700	1	5.20

Complete list of accessories is indicated in the terminal block datasheet.
Some accessories such as jumper bars may modify the terminal block's ratings: complete information in the accessories catalogue pages.

Ground IDC terminal blocks

Description		Color	Type	Part Number	Pkg pce	Weight (1 pce) g
Ground	Profile aligned with D2.5/5.ADO	Green-yellow	D2.5/5.P.ADO	1SNA399030R0500	50	9.00

Technical data valid for copper conductors only.

1SNC163001S0201 - Rev. A

D4/6.ADO IDC terminal blocks

Feed-through ADO - screw clamp - 6 mm 0.236 in spacing

D4/6.ADO

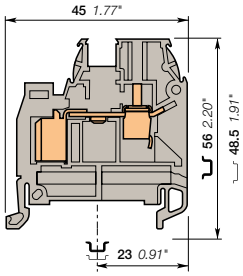

6 mm 0.236 in spacing

Description

- With the TE Connectivity ADO System®, experience the fastest and most reliable connection on the market,
- This solution brings all the benefits of the ADO System® and allows installators to connect on standard screw clamp,
- Up to 2 wires per connection in the ADO System® connection.

Ordering details

Description	Color	Type	Part Number		Pkg pce	Weight (1 pce) g
Feed-through	Grey	D4/6.ADO	1SNA199034R1500		50	7.00
	Blue	D4/6.N.ADO	1SNA199036R1700		50	7.00
	Orange	D4/6.ADO	1SNA199035R1600		50	7.00

Main technical data

		IEC	UL	CSA
ADO	Rigid: Solid/Stranded	0.34-1.5 mm²	22-16 AWG	22-16 AWG
	Flexible without ferrule	0.34-1.5 mm²		
Screw clamp	Rigid: Solid/Stranded	0.2-4 mm²	22-10 AWG	22-10 AWG
	Flexible without ferrule	0.22-4 mm²		
	Flexible with insulated ferrule			
	Gauge	A4		
Rated current / Rated cross section		17.5 A / 1.5 mm²	18 A / 16 AWG	18 A / 16 AWG
Rated short-time withstand current (1s)		180 A		
Rated voltage		1000 V	600 V	600 V
Impulse withstand voltage		8000 V		
Protection		IP20	NEMA 1	

Mounting instructions

Rail	TH 35-7.5, TH 35-15
Wire stripping length	9.5 mm 0.37 in
Tool	Flat screwdriver Ø 4 mm Ø 0.157 in
Torque	0.5 - 0.8 N.m 4.4 - 7.1 lb.in

The connecting capacity data for one Rigid: Solid/Stranded, or one Flexible conductor (when applicable) is a mandatory information required by IEC, UL and CSA standards (Copper conductors). All other data are provided as supplementary information only. For more details, please consult our CB, UL or CSA certificates and technical datasheet available on http://www.TE.com

RoHS / USR CNR / cCSAus / Gost R

Accessories

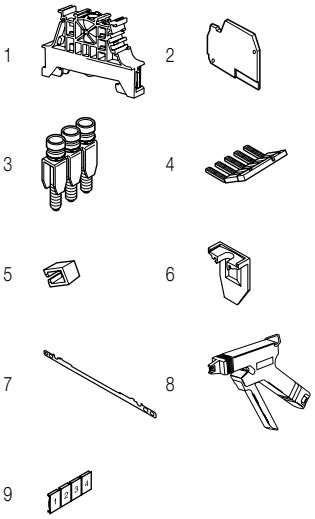

	Description			Color	Type	Part Number		Pkg pce	Weight (1 pce) g
1	**End stops**	10 mm	0.394 in	Dark grey	BAM4	1SNK900001R0000		50	14.00
		5.2 mm	0.205 in		BAZ1	1SNK900002R0000		50	5.30
2	**End sections**	3 mm	0.118 in	Grey	FEDAD1	1SNA199336R2000		20	2.50
3	**Jumper bars**	2 poles	32 A		BJMI6-2	1SNA176663R0000		10	4.40
		3 poles			BJMI6-3	1SNA176664R0100		10	6.70
		4 poles			BJMI6-4	1SNA176665R0200		10	8.90
		5 poles			BJMI6-5	1SNA176666R0300		10	11.20
		10 poles			BJMI6-10	1SNA176667R0400		10	22.40
4	**Lateral jumper bars**	2 poles	35 A	Grey	PC6-2	1SNA113546R1400		10	2.00
		10 poles			PC6-10	1SNA113548R2600		10	8.00
5	**Insulating tips**	For lateral jumper bars type PC...			EIP	1SNA113550R2400		10	
6	**Circuit separators**	0 mm	0 in	Grey	SCAD	1SNA196896R0000		10	
7	**Shield connectors**				CBM5	1SNA178745R1400		50	
8	**Tools**	Semi automatic tool			OUPAD	1SNA178944R0400		1	205.00
		Hand tool			OUMAD	1SNA179466R0600		1	29.00
9	**Terminal block markers**	Blank card		White	RC610	1SNA233000R0100		1	7.50

Complete list of accessories is indicated in the terminal block datasheet.
Some accessories such as jumper bars may modify the terminal block's ratings: complete information in the accessories catalogue pages.

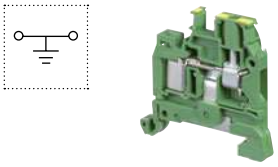

Ground IDC terminal blocks

Description		Color	Type	Part Number		Pkg pce	Weight (1 pce) g
Ground	Profile aligned with D4/6.ADO	Green-yellow	D4/6.P.ADO	1SNA199050R0100		50	11.00

Technical data valid for copper conductors only.

1SNC163002S0201 - Rev. A

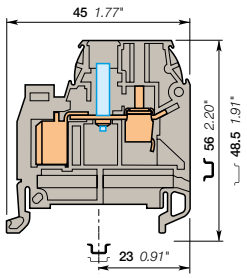

6 mm 0.236 in spacing

1

With test socket DIA 2 mm 0.079 in

Ordering details

Description		Color	Type	Part Number		Pkg pce	Weight (1 pce) g
Feed-through	With test socket DIA 2 mm 0.079 in	Grey	D4/6.ADO.2	1SNA199064R2300		50	8.00

Main technical data	IEC	UL	CSA	Nota
Rated voltage	800 V	600 V	600 V	
Impulse withstand voltage	8000 V			
Protection	IP20	NEMA 1		

The connecting capacity data for one Rigid: Solid/Stranded, or one Flexible conductor (when applicable) is a mandatory information required by IEC, UL and CSA standards (Copper conductors). All other data are provided as supplementary information only. For more details, please consult our CB, UL or CSA certificates and technical datasheet available on http://www.TE.com

RoHS USR CNR cCSAus Gost R

Accessories

	Description		Color	Type	Part Number		Pkg pce	Weight (1 pce) g
1	**Test plugs**	DIA 2 mm 0.079 in	Black	FC2	1SNA007865R2600		100	

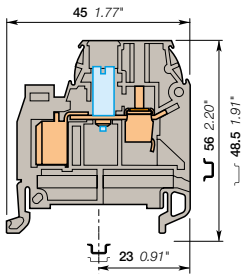

6 mm 0.236 in spacing

1

With test socket DIA 4 mm 0.157 in

Ordering details

Description		Color	Type	Part Number		Pkg pce	Weight (1 pce) g
Feed-through	With test socket DIA 4 mm 0.157 in	Grey	D4/6.ADO.4	1SNA199048R0300		50	8.00

Main technical data	IEC	UL	CSA	Nota
Rated voltage	800 V	600 V	600 V	
Impulse withstand voltage	8000 V			
Protection	IP10	NEMA		

The connecting capacity data for one Rigid: Solid/Stranded, or one Flexible conductor (when applicable) is a mandatory information required by IEC, UL and CSA standards (Copper conductors). All other data are provided as supplementary information only. For more details, please consult our CB, UL or CSA certificates and technical datasheet available on http://www.TE.com

RoHS USR CNR cCSAus Gost R

Accessories

	Description		Color	Type	Part Number		Pkg pce	Weight (1 pce) g
1	**Test plugs**	DIA 4 mm 0.157 in	White	FC4	1SNA167860R0100		10	10.00

Technical data valid for copper conductors only.

1SNC163003S0201 - Rev. A

D6/8.ADO IDC terminal blocks

Feed-through ADO - screw clamp - 8 mm 0.315 in spacing

D6/8.ADO

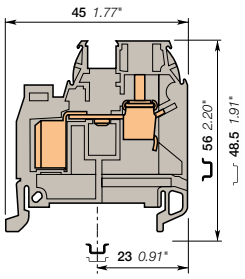

8 mm 0.315 in spacing

2.5 mm²
14 AWG

Description

- With the TE Connectivity ADO System®, experience the fastest and most reliable connection on the market,
- This solution brings all the benefits of the ADO System® and allows installators to connect on standard screw clamp,
- Up to 2 wires per connection in the ADO System® connection.

Ordering details

Description		Color	Type	Part Number		Pkg pce	Weight (1 pce) g
Feed-through	With black marking for wire size 1-2.5 mm² (16-14 AWG)	Grey	D6/8.ADO	1SNA199042R2500		50	11.00
		Blue	D6/8.N.ADO	1SNA199044R2700		50	11.00
		Orange	D6/8.ADO	1SNA199043R2600		50	11.00

Main technical data

		IEC	UL	CSA
ADO	Rigid: Solid/Stranded	1-2.5 mm²	16-14 AWG	16-14 AWG
	Flexible without ferrule	1-2.5 mm²		
Screw clamp	Rigid: Solid/Stranded	0.2-10 mm²	22-8 AWG	22-8 AWG
	Flexible without ferrule	0.22-6 mm²		
	Flexible with insulated ferrule			
	Gauge	A5		
Rated current / Rated cross section		24 A / 2.5 mm²	25 A / 14 AWG	25 A / 14 AWG
Rated short-time withstand current (1s)		300 A		
Rated voltage		1000 V	600 V	600 V
Impulse withstand voltage		8000 V		
Protection		IP20	NEMA 1	

Mounting instructions

Rail	TH 35-7.5, TH 35-15
Wire stripping length	12 mm 0.47 in
Tool	Flat screwdriver Ø 4 - 5 mm Ø 0.157 - 0.197 in
Torque	0.8 - 1 N.m 7.1 - 8.9 lb.in

The connecting capacity data for one Rigid: Solid/Stranded, or one Flexible conductor (when applicable) is a mandatory information required by IEC, UL and CSA standards (Copper conductors). All other data are provided as supplementary information only. For more details, please consult our CB, UL or CSA certificates and technical datasheet available on http://www.TE.com

RoHS USR CNR cCSAus Gost R

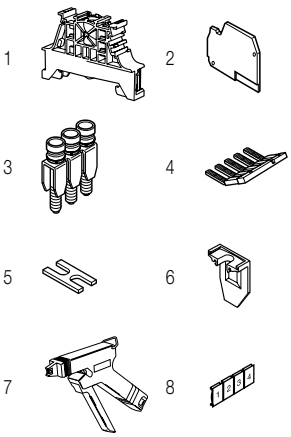

Accessories

	Description			Color	Type	Part Number		Pkg pce	Weight (1 pce) g
1	**End stops**	10 mm	0.394 in	Dark grey	BAM4	1SNK900001R0000		50	14.00
		5.2 mm	0.205 in		BAZ1	1SNK900002R0000		50	5.30
2	**End sections**	3 mm	0.118 in	Grey	FEDAD1	1SNA199336R2000		20	2.50
3	**Jumper bars**	2 poles	41 A		BJMI8-2	1SNA176669R1600		10	4.50
		3 poles			BJMI8-3	1SNA176670R1300		10	6.00
		4 poles			BJMI8-4	1SNA176671R0000		10	10.00
		5 poles			BJMI8-5	1SNA176672R0100		10	12.22
		10 poles			BJMI8-10	1SNA176673R0200		10	20.00
4	**Lateral jumper bars**	2 poles	50 A		PC8-2	1SNA116538R1700		10	3.00
		10 poles			PC8-10	1SNA163313R2400		10	14.00
5	**Cross spacing jumpers**	5 mm 0.200 in - 6 mm 0.236 in - 8 mm 0.315 in			EL6	1SNA173627R2100		10	0.10
		Universal screw jumper bar kit N°I			BJDP1	1SNA179623R0300		10	7.00
		Universal screw jumper bar kit N°III			BJDP3	1SNA179625R0500		10	5.00
6	**Circuit separators**	0 mm	0 in	Grey	SCAD	1SNA196896R0000		10	
7	**Tools**	Semi automatic tool			OUPAD	1SNA178944R0400		1	205.00
		Hand tool			OUMAD	1SNA179466R0600		1	29.00
8	**Terminal block markers**	Blank card		White	RC810	1SNA234000R0200		1	8.20

Complete list of accessories is indicated in the terminal block datasheet.
Some accessories such as jumper bars may modify the terminal block's ratings: complete information in the accessories catalogue pages.

Ground IDC terminal blocks

Description		Color	Type	Part Number		Pkg pce	Weight (1 pce) g
Ground	Profile aligned with D6/8.ADO	Green-yellow	D6/8.P.ADO	1SNA199118R2600		50	14.00

Technical data valid for copper conductors only.

1SNC163004S0201 - Rev. A

2.5 mm²
14 AWG

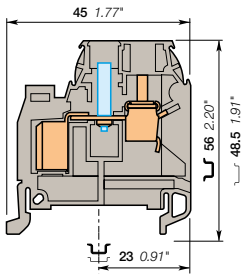

8 mm 0.315 in spacing

1

With test socket DIA 2 mm 0.079 in

Ordering details

Description		Color	Type	Part Number		Pkg pce	Weight (1 pce) g
Feed-through	With test socket DIA 2 mm 0.079 in and black marking for wire size 1-2.5 mm² (16-14 AWG)	Grey	D6/8.ADO.2	1SNA199155R2300		50	12.00

Main technical data	IEC	UL	CSA	Nota
Rated voltage	1000 V	600 V	600 V	
Impulse withstand voltage	8000 V			
Protection	IP20	NEMA 1		

The connecting capacity data for one Rigid: Solid/Stranded, or one Flexible conductor (when applicable) is a mandatory information required by IEC, UL and CSA standards (Copper conductors). All other data are provided as supplementary information only. For more details, please consult our CB, UL or CSA certificates and technical datasheet available on http://www.TE.com

RoHS RoHS · USR CNR · cCSAus · Gost R

Accessories

	Description		Color	Type	Part Number		Pkg pce	Weight (1 pce) g
1	**Test plugs**	DIA 2 mm 0.079 in	Black	FC2	1SNA007865R2600		100	

2.5 mm²
14 AWG

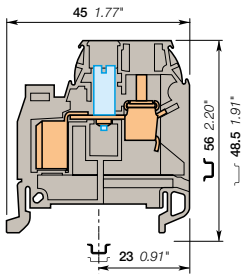

8 mm 0.315 in spacing

1

With test socket DIA 4 mm 0.157 in

Ordering details

Description		Color	Type	Part Number		Pkg pce	Weight (1 pce) g
Feed-through	With test socket DIA 4 mm 0.157 in and black marking for wire size 1-2.5 mm² (16-14 AWG)	Grey	D6/8.ADO.4	1SNA199157R2500		50	12.00

Main technical data	IEC	UL	CSA	Nota
Rated voltage	800 V	600 V	600 V	
Impulse withstand voltage	8000 V			
Protection	IP10	NEMA		

The connecting capacity data for one Rigid: Solid/Stranded, or one Flexible conductor (when applicable) is a mandatory information required by IEC, UL and CSA standards (Copper conductors). All other data are provided as supplementary information only. For more details, please consult our CB, UL or CSA certificates and technical datasheet available on http://www.TE.com

RoHS RoHS · USR CNR · cCSAus · Gost R

Accessories

	Description		Color	Type	Part Number		Pkg pce	Weight (1 pce) g
1	**Test plugs**	DIA 4 mm 0.157 in	White	FC4	1SNA167860R0100		10	10.00

Technical data valid for copper conductors only.

1SNC163005S0201 - Rev. A

D6/8.ADO IDC terminal blocks

Feed-through ADO - screw clamp - 8 mm 0.315 in spacing

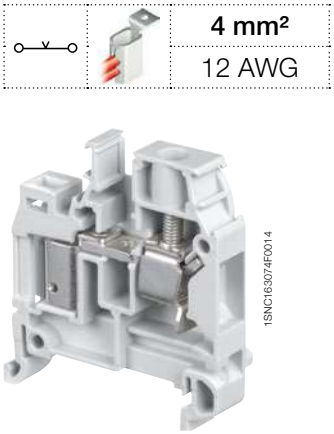

4 mm²
12 AWG

D6/8.ADO

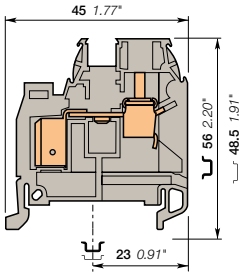

8 mm 0.315 in spacing

Description

- With the TE Connectivity ADO System®, experience the fastest and most reliable connection on the market,
- This solution brings all the benefits of the ADO System® and allows installators to connect on standard screw clamp.

Ordering details

Description		Color	Type	Part Number		Pkg pce	Weight (1 pce) g
Feed-through	With white marking for wire size 4 mm2 (12 AWG)	Grey	D6/8.ADO3	1SNA399245R1500		50	11.00
		Blue	D6/8.N.ADO3	1SNA399319R1700		50	11.00
		Orange	D6/8.ADO3	1SNA399800R1700		50	11.00

Main technical data

		IEC	UL	CSA
ADO	Rigid: Solid/Stranded	4 mm²		12 AWG
	Flexible without ferrule	4 mm²		12 AWG
Screw clamp	Rigid: Solid/Stranded	0.2-10 mm²		22-8 AWG
	Flexible without ferrule	0.22-6 mm²		
	Flexible with insulated ferrule			
	Gauge	A5		
Rated current / Rated cross section		32 A / 4 mm²		25 A / 12 AWG
Rated short-time withstand current (1s)		480 A		
Rated voltage		1000 V		600 V
Impulse withstand voltage		8000 V		
Protection		IP20	NEMA 1	

Mounting instructions

Rail	TH 35-7.5, TH 35-15
Wire stripping length	12 mm 0.47 in
Tool	Flat screwdriver Ø 4 - 5 mm Ø 0.157 - 0.197 in
Torque	0.8 - 1 N.m 7.1 - 8.9 lb.in

The connecting capacity data for one Rigid: Solid/Stranded, or one Flexible conductor (when applicable) is a mandatory information required by IEC, UL and CSA standards (Copper conductors). All other data are provided as supplementary information only. For more details, please consult our CB, UL or CSA certificates and technical datasheet available on http://www.TE.com

RoHS RoHS | cCSAus | Gost R

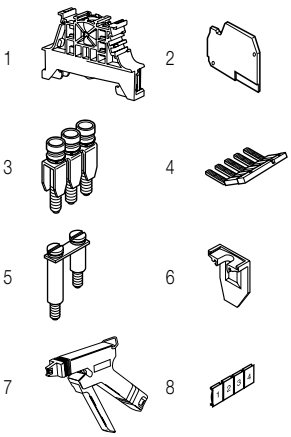

Accessories

	Description			Color	Type	Part Number		Pkg pce	Weight (1 pce) g
1	**End stops**	10 mm	0.394 in	Dark grey	BAM4	1SNK900001R0000		50	14.00
		5.2 mm	0.205 in		BAZ1	1SNK900002R0000		50	5.30
2	**End sections**	3 mm	0.118 in	Grey	FEDAD1	1SNA199336R2000		20	2.50
3	**Jumper bars**	2 poles	41 A		BJMI8-2	1SNA176669R1600		10	4.50
		3 poles			BJMI8-3	1SNA176670R1300		10	6.00
		4 poles			BJMI8-4	1SNA176671R0000		10	10.00
		5 poles			BJMI8-5	1SNA176672R0100		10	12.22
		10 poles			BJMI8-10	1SNA176673R0200		10	20.00
4	**Lateral jumper bars**	2 poles	50 A		PC8-2	1SNA116538R1700		10	3.00
		10 poles			PC8-10	1SNA163313R2400		10	14.00
5	**Cross spacing jumpers**	Universal screw jumper bar kit N°I			BJDP1	1SNA179623R0300		10	7.00
		Universal screw jumper bar kit N°III			BJDP3	1SNA179625R0500		10	5.00
6	**Circuit separators**	0 mm	0 in	Grey	SCAD	1SNA196896R0000		10	
7	**Tools**	Semi automatic tool			OUPAD	1SNA178944R0400		1	205.00
		Hand tool			OUMAD	1SNA179466R0600		1	29.00
8	**Terminal block markers**	Blank card		White	RC810	1SNA234000R0200		1	8.20

Complete list of accessories is indicated in the terminal block datasheet.
Some accessories such as jumper bars may modify the terminal block's ratings: complete information in the accessories catalogue pages.

Ground IDC terminal blocks

Description		Color	Type	Part Number		Pkg pce	Weight (1 pce) g
Ground	Profile aligned with D6/8 ADO	Green-yellow	D6/8.P.ADO3	1SNA399251R1300		50	14.00

Technical data valid for copper conductors only.

1SNC163006S0201 - Rev. A

D2.5/5.P.ADO IDC terminal blocks

Ground ADO - screw clamp - 5 mm 0.197 in spacing

D2.5/5.P.ADO

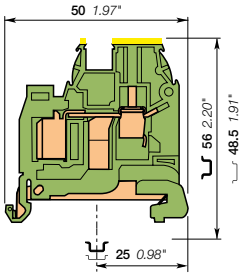

5 mm 0.197 in spacing

	1 mm²
	18 AWG

Description

- Protect your installation in the event of a short-circuit thanks to our screwless rail contact non operator dependent,
- Secure mounting or removal from the rail,
- This solution brings all the benefits of the ADO System® and allows installators to connect on standard screw clamp,
- Up to 2 wires per connection in the ADO System® connection.

Ordering details

Description		Color	Type	Part Number		Pkg pce	Weight (1 pce) g
Ground	Screwless rail connection	Green-yellow	D2.5/5.P.ADO	1SNA399030R0500		50	9.00

Main technical data

		IEC	UL	CSA
ADO	Rigid: Solid/Stranded	0.2-1 mm²		24-18 AWG
	Flexible without ferrule	0.22-1 mm²		
Screw clamp	Rigid: Solid/Stranded	0.2-4 mm²		22-12 AWG
	Flexible without ferrule	0.22-2.5 mm²		
	Flexible with insulated ferrule			
	Gauge	A3		
Rated cross section		1 mm²		18 AWG
Rated short-time withstand current (1s)		120 A		
Protection		IP20	NEMA 1	

Mounting instructions

Rail	TH 35-7.5, TH 35-15
Wire stripping length	9.5 mm 0.37 in
Tool	Flat screwdriver Ø 3.5 mm Ø 0.138 in
Torque	0.4 - 0.6 N.m 3.5 - 5.3 lb.in

The connecting capacity data for one Rigid: Solid/Stranded, or one Flexible conductor (when applicable) is a mandatory information required by IEC, UL and CSA standards (Copper conductors). All other data are provided as supplementary information only. For more details, please consult our CB, UL or CSA certificates and technical datasheet available on http://www.TE.com

RoHS cCSAus Gost R

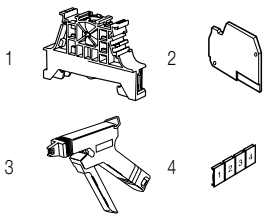

Accessories

	Description		Color	Type	Part Number		Pkg pce	Weight (1 pce) g
1	**End stops**	10 mm 0.394 in	Dark grey	BAM4	1SNK900001R0000		50	14.00
		5.2 mm 0.205 in		BAZ1	1SNK900002R0000		50	5.30
2	**End sections**	3 mm 0.118 in	Grey	FEDAD1	1SNA199336R2000		20	2.50
3	**Tools**	Semi automatic tool		OUPAD	1SNA178944R0400		1	205.00
		Hand tool		OUMAD	1SNA179466R0600		1	29.00
4	**Terminal block markers**	Blank card	White	RC510	1SNA231000R0700		1	5.20

Complete list of accessories is indicated in the terminal block datasheet.
Some accessories such as jumper bars may modify the terminal block's ratings: complete information in the accessories catalogue pages.

Technical data valid for copper conductors only.

1SNC163009S0201 - Rev. A

D4/6.P.ADO IDC terminal blocks

Ground ADO - screw clamp - 6 mm 0.236 in spacing

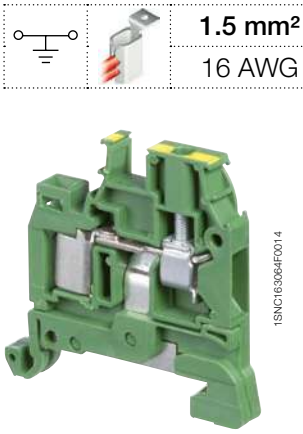

D4/6.P.ADO

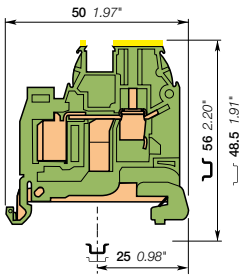

6 mm 0.236 in spacing

1.5 mm²
16 AWG

Description

- Protect your installation in the event of a short-circuit thanks to our screwless rail contact non operator dependent,
- Secure mounting or removal from the rail,
- This solution brings all the benefits of the ADO System® and allows installators to connect on standard screw clamp,
- Up to 2 wires per connection in the ADO System® connection.

Ordering details

Description		Color	Type	Part Number		Pkg pce	Weight (1 pce) g
Ground	Screwless rail connection	Green-yellow	D4/6.P.ADO	1SNA199050R0100		50	11.00

Main technical data

		IEC	UL	CSA
ADO	Rigid: Solid/Stranded	0.34-1.5 mm²	22-16 AWG	22-16 AWG
	Flexible without ferrule	0.34-1.5 mm²		
Screw clamp	Rigid: Solid/Stranded	0.2-4 mm²	22-10 AWG	22-10 AWG
	Flexible without ferrule	0.22-4 mm²		
	Flexible with insulated ferrule			
	Gauge	A4		
Rated cross section		1.5 mm²	16 AWG	16 AWG
Rated short-time withstand current (1s)		180 A		
Protection		IP20	NEMA 1	

Mounting instructions

Rail	TH 35-7.5, TH 35-15
Wire stripping length	9.5 mm 0.37 in
Tool	Flat screwdriver Ø 4 mm Ø 0.157 in
Torque	0.5 - 0.8 N.m 4.4 - 7.1 lb.in

The connecting capacity data for one Rigid: Solid/Stranded, or one Flexible conductor (when applicable) is a mandatory information required by IEC, UL and CSA standards (Copper conductors). All other data are provided as supplementary information only. For more details, please consult our CB, UL or CSA certificates and technical datasheet available on http://www.TE.com

RoHS USR CNR cCSAus Gost R

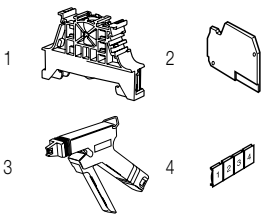

Accessories

	Description		Color	Type	Part Number		Pkg pce	Weight (1 pce) g
1	**End stops**	10 mm 0.394 in	Dark grey	BAM4	1SNK900001R0000		50	14.00
		5.2 mm 0.205 in		BAZ1	1SNK900002R0000		50	5.30
2	**End sections**	3 mm 0.118 in	Grey	FEDAD1	1SNA199336R2000		20	2.50
3	**Tools**	Semi automatic tool		OUPAD	1SNA178944R0400		1	205.00
		Hand tool		OUMAD	1SNA179466R0600		1	29.00
4	**Terminal block markers**	Blank card	White	RC610	1SNA233000R0100		1	7.50

Complete list of accessories is indicated in the terminal block datasheet.
Some accessories such as jumper bars may modify the terminal block's ratings: complete information in the accessories catalogue pages.

Technical data valid for copper conductors only.

1SNC163010S0201 - Rev. A

D6/8.P.ADO IDC terminal blocks

Ground ADO - screw clamp - 8 mm 0.315 in spacing

2.5 mm²
14 AWG

1SNC163135F0014

D6/8.P.ADO

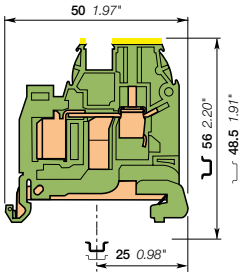

8 mm 0.315 in spacing

Description

- Protect your installation in the event of a short-circuit thanks to our screwless rail contact non operator dependent,
- Secure mounting or removal from the rail,
- This solution brings all the benefits of the ADO System® and allows installators to connect on standard screw clamp,
- Up to 2 wires per connection in the ADO System® connection.

Ordering details

Description		Color	Type	Part Number		Pkg pce	Weight (1 pce) g
Ground	Screwless rail connection, with black marking for wire size 1-2.5 mm² (16-14 AWG)	Green-yellow	D6/8.P.ADO	1SNA199118R2600		50	14.00

Main technical data

		IEC	UL	CSA
ADO	Rigid: Solid/Stranded	1-2.5 mm²	16-14 AWG	16-14 AWG
	Flexible without ferrule	1-2.5 mm²		
Screw clamp	Rigid: Solid/Stranded	0.2-10 mm²	22-8 AWG	22-8 AWG
	Flexible without ferrule	0.22-6 mm²		
	Flexible with insulated ferrule			
	Gauge	A5		
Rated cross section		2.5 mm²	14 AWG	14 AWG
Rated short-time withstand current (1s)		300 A		
Protection		IP20	NEMA 1	

Mounting instructions

Rail		TH 35-7.5, TH 35-15
Wire stripping length		12 mm 0.47 in
Tool		Flat screwdriver Ø 4 - 5 mm Ø 0.157 - 0.197 in
Torque		0.8 - 1 N.m 7.1 - 8.9 lb.in

The connecting capacity data for one Rigid: Solid/Stranded, or one Flexible conductor (when applicable) is a mandatory information required by IEC, UL and CSA standards (Copper conductors). All other data are provided as supplementary information only. For more details, please consult our CB, UL or CSA certificates and technical datasheet available on http://www.TE.com

RoHS USR CNR cCSAus Gost R

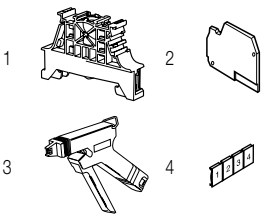

Accessories

	Description			Color	Type	Part Number		Pkg pce	Weight (1 pce) g
1	**End stops**	10 mm	0.394 in	Dark grey	BAM4	1SNK900001R0000		50	14.00
		5.2 mm	0.205 in		BAZ1	1SNK900002R0000		50	5.30
2	**End sections**	3 mm	0.118 in	Grey	FEDAD1	1SNA199336R2000		20	2.50
3	**Tools**	Semi automatic tool			OUPAD	1SNA178944R0400		1	205.00
		Hand tool			OUMAD	1SNA179466R0600		1	29.00
4	**Terminal block markers**	Blank card		White	RC810	1SNA234000R0200		1	8.20

Complete list of accessories is indicated in the terminal block datasheet.
Some accessories such as jumper bars may modify the terminal block's ratings: complete information in the accessories catalogue pages.

Technical data valid for copper conductors only.

1SNC163011S0201 - Rev. A

D6/8.P.ADO IDC terminal blocks

Ground ADO - screw clamp - 8 mm 0.315 in spacing

4 mm²
12 AWG

D6/8.P.ADO

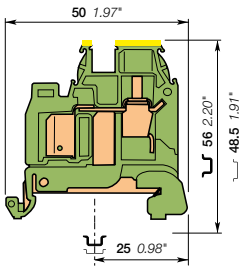

8 mm 0.315 in spacing

Description

- Protect your installation in the event of a short-circuit thanks to our screwless rail contact non operator dependent,
- Secure mounting or removal from the rail,
- This solution brings all the benefits of the ADO System® and allows installators to connect on standard screw clamp.

Ordering details

Description		Color	Type	Part Number		Pkg pce	Weight (1 pce) g
Ground	Screwless rail connection, with white marking for wire size 4 mm² (12 AWG)	Green-yellow	D6/8.P.ADO3	1SNA399251R1300		50	14.00

Main technical data

		IEC	UL	CSA
ADO	Rigid: Solid/Stranded	4 mm²		12 AWG
	Flexible without ferrule	4 mm²		
Screw clamp	Rigid: Solid/Stranded	0.2-10 mm²		22-8 AWG
	Flexible without ferrule	0.22-6 mm²		
	Flexible with insulated ferrule			
	Gauge	A5		
Rated cross section		4 mm²		12 AWG
Rated short-time withstand current (1s)		480 A		
Protection		IP20	NEMA 1	

Mounting instructions

Rail		TH 35-7.5, TH 35-15
Wire stripping length		12 mm 0.47 in
Tool		Flat screwdriver Ø 4 - 5 mm Ø 0.157 - 0.197 in
Torque		0.8 - 1 N.m 7.1 - 8.9 lb.in

The connecting capacity data for one Rigid: Solid/Stranded, or one Flexible conductor (when applicable) is a mandatory information required by IEC, UL and CSA standards (Copper conductors). All other data are provided as supplementary information only. For more details, please consult our CB, UL or CSA certificates and technical datasheet available on http://www.TE.com

RoHS cCSAus Gost R

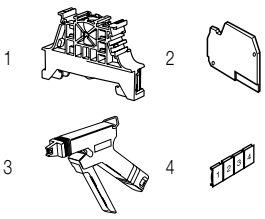

Accessories

	Description			Color	Type	Part Number		Pkg pce	Weight (1 pce) g
1	**End stops**	10 mm	0.394 in	Dark grey	BAM4	1SNK900001R0000		50	14.00
		5.2 mm	0.205 in		BAZ1	1SNK900002R0000		50	5.30
2	**End sections**	3 mm	0.118 in	Grey	FEDAD1	1SNA199336R2000		20	2.50
3	**Tools**	Semi automatic tool			OUPAD	1SNA178944R0400		1	205.00
		Hand tool			OUMAD	1SNA179466R0600		1	29.00
4	**Terminal block markers**	Blank card		White	RC810	1SNA234000R0200		1	8.20

Complete list of accessories is indicated in the terminal block datasheet.
Some accessories such as jumper bars may modify the terminal block's ratings: complete information in the accessories catalogue pages.

Technical data valid for copper conductors only.

1SNC163012S0201 - Rev. A

D4/6.D2.ADO IDC terminal blocks

Double deck ADO - screw clamp - 6 mm 0.236 in spacing

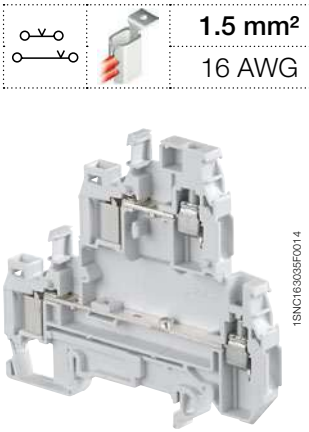

D4/6.D2.ADO

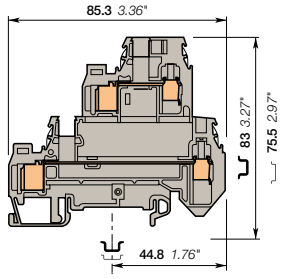

6 mm 0.236 in spacing

	1.5 mm²
	16 AWG

Description

- Save space with 2 decks terminal block,
- With the TE Connectivity ADO System®, experience the fastest and most reliable connection on the market,
- This solution brings all the benefits of the ADO System® and allows installators to connect on standard screw clamp,
- Up to 2 wires per connection in the ADO System® connection.

Ordering details

Description		Color	Type	Part Number		Pkg pce	Weight (1 pce) g
Feed-through	With 2 feed-through circuits	Grey	D4/6.D2.ADO	1SNA199242R0200		50	18.00
		Blue	D4/6.D2.N.ADO	1SNA199244R0400		50	18.00

Main technical data

		IEC	UL	CSA
ADO	Rigid: Solid/Stranded	0.28-1.5 mm²		22-16 AWG
	Flexible without ferrule	0.34-1.5 mm²		
Screw clamp	Rigid: Solid/Stranded	0.2-4 mm²		22-10 AWG
	Flexible without ferrule	0.22-4 mm²		
	Flexible with insulated ferrule			
	Gauge	A4		
Rated current / Rated cross section		17.5 A / 1.5 mm²		18 A / 16 AWG
Rated short-time withstand current (1s)		180 A		
Rated voltage		800 V		600 V
Impulse withstand voltage		6000 V		
Protection		IP20	NEMA 1	

The connecting capacity data for one Rigid: Solid/Stranded, or one Flexible conductor (when applicable) is a mandatory information required by IEC, UL and CSA standards (Copper conductors). All other data are provided as supplementary information only. For more details, please consult our CB, UL or CSA certificates and technical datasheet available on http://www.TE.com

RoHS cCSAus Gost R

Mounting instructions

Rail	TH 35-7.5, TH 35-15
Wire stripping length	9.5 mm 0.37 in
Tool	Flat screwdriver Ø 4 mm Ø 0.157 in
Torque	0.5 - 0.8 N.m 4.4 - 7.1 lb.in

2

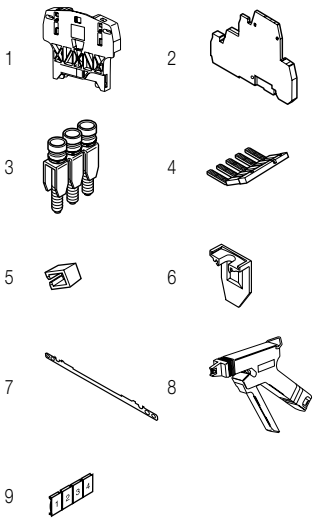

Accessories

	Description			Color	Type	Part Number		Pkg pce	Weight (1 pce) g
1	**End stops**	10 mm	0.394 in	Dark grey	BAZH1	1SNK900102R0000		20	24.00
2	**End sections**	5 mm	0.197 in	Grey	FED2AD1	1SNA199417R1200		20	6.60
3	**Jumper bars**	2 poles	32 A		BJMI6-2	1SNA176663R0000		10	4.40
		3 poles			BJMI6-3	1SNA176664R0100		10	6.70
		4 poles			BJMI6-4	1SNA176665R0200		10	8.90
		5 poles			BJMI6-5	1SNA176666R0300		10	11.20
		10 poles			BJMI6-10	1SNA176667R0400		10	22.40
4	**Lateral jumper bars**	2 poles	35 A	Grey	PC6-2	1SNA113546R1400		10	2.00
		10 poles			PC6-10	1SNA113548R2600		10	8.00
5	**Insulating tips**	For lateral jumper bars type PC...			EIP	1SNA113550R2400		10	
6	**Circuit separators**	0 mm	0 in	Grey	SCAD	1SNA196896R0000		10	
7	**Shield connectors**				CBD2S	1SNA178408R1400		50	
8	**Tools**	Semi automatic tool			OUPAD	1SNA178944R0400		1	205.00
		Hand tool			OUMAD	1SNA179466R0600		1	29.00
9	**Terminal block markers**	Blank card		White	RC610	1SNA233000R0100		1	7.50

Complete list of accessories is indicated in the terminal block datasheet.
Some accessories such as jumper bars may modify the terminal block's ratings: complete information in the accessories catalogue pages.

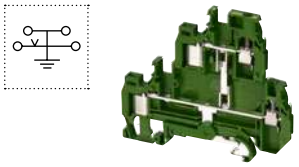

Ground

Description		Color	Type	Part Number		Pkg pce	Weight (1 pce) g
Ground	Profile aligned with D4/6.D2 ADO	Green-yellow	D4/6.D1.P.ADO	1SNA399931R2500		50	23.00

Technical data valid for copper conductors only.

1SNC163007S0201 - Rev. A

D6/8.D2.ADO IDC terminal blocks

Double deck ADO - screw clamp - 8 mm 0.315 in spacing

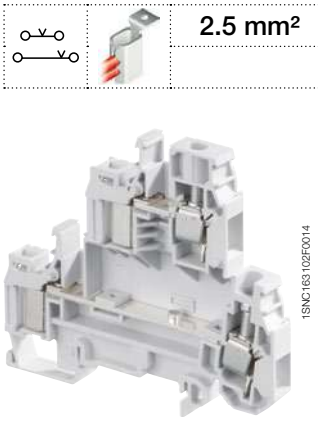

D6/8.D2.ADO

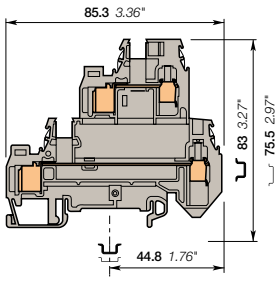

8 mm 0.315 in spacing

2.5 mm²

Description

- Save space with 2 decks terminal block,
- With the TE Connectivity ADO System®, experience the fastest and most reliable connection on the market,
- This solution brings all the benefits of the ADO System® and allows installators to connect on standard screw clamp,
- Up to 2 wires per connection in the ADO System® connection.

Ordering details

Description		Color	Type	Part Number		Pkg pce	Weight (1 pce) g
Feed-through	With 2 feed-through circuits	Grey	D6/8.D2.ADO	1SNA399600R2600		50	

Main technical data

		IEC	UL	CSA
ADO	Rigid: Solid/Stranded	1-2.5 mm²		
	Flexible without ferrule	1-2.5 mm²		
Screw clamp	Rigid: Solid/Stranded	0.2-10 mm²		
	Flexible without ferrule	0.22-6 mm²		
	Flexible with insulated ferrule			
	Gauge	A5		
Rated current / Rated cross section		24 A / 2.5 mm²		
Rated short-time withstand current (1s)		300 A		
Rated voltage		800 V		
Impulse withstand voltage		8000 V		
Protection		IP20	NEMA 1	

Mounting instructions

Rail	TH 35-7.5, TH 35-15
Wire stripping length	12 mm 0.47 in
Tool	Flat screwdriver Ø 4-4.5 mm Ø 0.157 - 0.177 in
Torque	0.8 - 1 N.m 7.1 - 8.9 lb.in

The connecting capacity data for one Rigid: Solid/Stranded, or one Flexible conductor (when applicable) is a mandatory information required by IEC, UL and CSA standards (Copper conductors). All other data are provided as supplementary information only. For more details, please consult our CB, UL or CSA certificates and technical datasheet available on http://www.TE.com

RoHS RoHS Gost R

Accessories

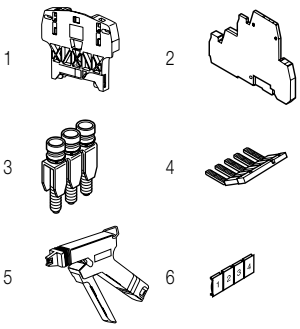

	Description			Color	Type	Part Number		Pkg pce	Weight (1 pce) g
1	**End stops**	10 mm	0.394 in	Dark grey	BAZH1	1SNK900102R0000		20	24.00
2	**End sections**	5 mm	0.197 in	Grey	FED2AD1	1SNA199417R1200		20	6.60
3	**Jumper bars**	2 poles	41 A		BJMI8-2	1SNA176669R1600		10	4.50
		3 poles			BJMI8-3	1SNA176670R1300		10	6.00
		4 poles			BJMI8-4	1SNA176671R0000		10	10.00
		5 poles			BJMI8-5	1SNA176672R0100		10	12.22
		10 poles			BJMI8-10	1SNA176673R0200		10	20.00
4	**Lateral jumper bars**	2 poles	50 A	Grey	PC8-2	1SNA116538R1700		10	3.00
		10 poles			PC8-10	1SNA163313R2400		10	
5	**Tools**	Semi automatic tool			OUPAD	1SNA178944R0400		1	205.00
		Hand tool			OUMAD	1SNA179466R0600		1	29.00
6	**Terminal block markers**	Blank card		White	RC810	1SNA234000R0200		1	8.20

Complete list of accessories is indicated in the terminal block datasheet.
Some accessories such as jumper bars may modify the terminal block's ratings: complete information in the accessories catalogue pages.

Technical data valid for copper conductors only.

1SNC163008S0201 - Rev. A

D2.5/5.SN.ADO IDC terminal blocks

Disconnect with blade - with test socket - ADO screw clamp 5 mm 0.197 in spacing

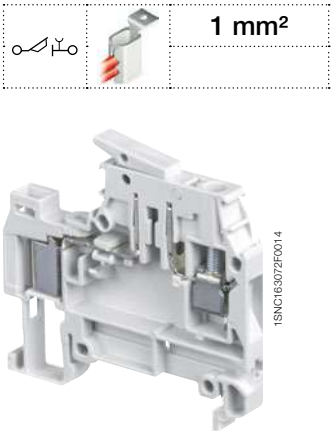

D2.5/5.SN.ADO

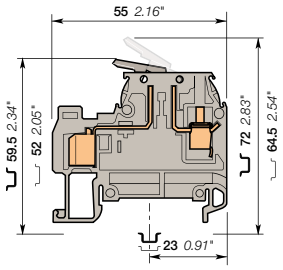

5 mm 0.197 in spacing

Description

- Ease your disconnect operations with the disconnect knife blade operated by hand,
- With the TE Connectivity ADO System®, experience the fastest and most reliable connection on the market,
- This solution brings all the benefits of the ADO System® and allows installators to connect on standard screw clamp,
- Up to 2 wires per connection in the ADO System® connection.

Ordering details

Description		Color	Type	Part Number		Pkg pce	Weight (1 pce) g
Disconnect	With test socket DIA 2 mm 0.079 in on the ADO side	Grey	D2.5/5.SN.ADO	1SNA399226R0200		50	9.00

Main technical data

		IEC	UL	CSA
ADO	Rigid: Solid/Stranded	0.2-1 mm²		
	Flexible without ferrule	0.22-1 mm²		
Screw clamp	Rigid: Solid/Stranded	0.2-4 mm²		
	Flexible without ferrule	0.22-2.5 mm²		
	Flexible with insulated ferrule			
	Gauge	A3		
Rated current / Rated cross section		10 A / 1 mm²		
Rated short-time withstand current (1s)		120 A		
Rated voltage		320 V		
Impulse withstand voltage		4000 V		
Protection		IP20	NEMA 1	

Mounting instructions

Rail	TH 35-7.5, TH 35-15
Wire stripping length	9.5 mm 0.37 in
Tool	Flat screwdriver Ø 3.5 mm Ø 0.138 in
Torque	0.4 - 0.6 N.m 3.5 - 5.3 lb.in

The connecting capacity data for one Rigid: Solid/Stranded, or one Flexible conductor (when applicable) is a mandatory information required by IEC, UL and CSA standards (Copper conductors). All other data are provided as supplementary information only. For more details, please consult our CB, UL or CSA certificates and technical datasheet available on http://www.TE.com

RoHS — Gost R

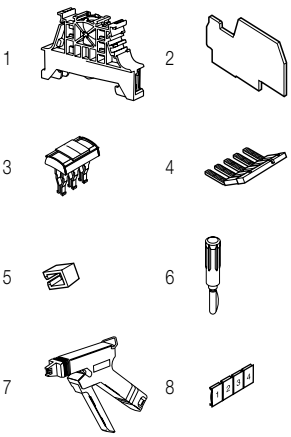

Accessories

	Description			Color	Type	Part Number		Pkg pce	Weight (1 pce) g
1	**End stops**	End stops		Dark grey	BAM4	1SNK900001R0000		50	14.00
					BAZ1	1SNK900002R0000		50	5.30
2	**End sections**	2 mm	0.079 in	Grey	FEDAD4	1SNA199352R0000		20	2.30
3	**Jumper bars**	2 poles	13.5 A	Orange	BJADO5-2	1SNA205955R0300		20	1.00
		3 poles			BJADO5-3	1SNA205956R0400		20	1.00
		5 poles			BJADO5-5	1SNA205958R1600		20	2.00
		10 poles			BJADO5-10	1SNA205963R0300		10	5.00
4	**Lateral jumper bars**	2 poles	30 A	Grey	PC5-2	1SNA113542R1000		10	1.80
		10 poles			PC5-10	1SNA113544R1200		10	6.00
5	**Insulating tips**	For lateral jumper bars type PC...			EIP	1SNA113550R2400		10	
6	**Test plugs**	DIA 2 mm 0.079 in		Black	FC2	1SNA007865R2600		100	
7	**Tools**	Semi automatic tool			OUPAD	1SNA178944R0400		1	205.00
		Hand tool			OUMAD	1SNA179466R0600		1	29.00
8	**Terminal block markers**	Blank card		White	RC510	1SNA231000R0700		1	5.20

Complete list of accessories is indicated in the terminal block datasheet.
Some accessories such as jumper bars may modify the terminal block's ratings: complete information in the accessories catalogue pages.

Technical data valid for copper conductors only.

1SNC163013S0201 - Rev. A

D2.5/5.SN.ADO IDC terminal blocks

Disconnect with blade - with test socket - ADO screw clamp 5 mm 0.197 in spacing

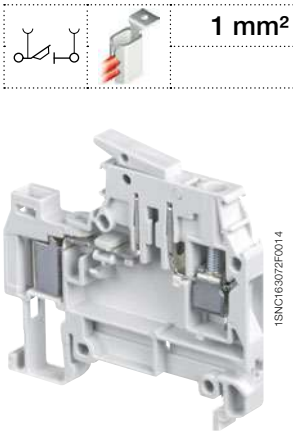

D2.5/5.SN.ADO

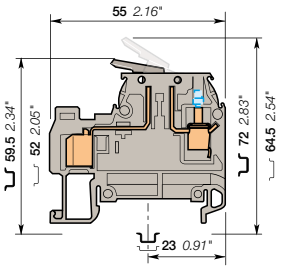

5 mm 0.197 in spacing

Description

- Ease your disconnect operations with the disconnect knife blade operated by hand,
- With the TE Connectivity ADO System®, experience the fastest and most reliable connection on the market,
- This solution brings all the benefits of the ADO System® and allows installators to connect on standard screw clamp,
- Up to 2 wires per connection in the ADO System® connection.

Ordering details

Description		Color	Type	Part Number		Pkg pce	Weight (1 pce) g
Disconnect	With 2 test sockets DIA 2 mm 0.079 in	Grey	D2.5/5.SNT2.ADO	1SNA399228R1400		50	9.00

Main technical data

		IEC	UL	CSA
ADO	Rigid: Solid/Stranded	0.2-1 mm²		
	Flexible without ferrule	0.22-1 mm²		
Screw clamp	Rigid: Solid/Stranded	0.2-4 mm²		
	Flexible without ferrule	0.22-2.5 mm²		
	Flexible with insulated ferrule			
	Gauge	A3		
Rated current / Rated cross section		10 A / 1 mm²		
Rated short-time withstand current (1s)		120 A		
Rated voltage		320 V		
Impulse withstand voltage		4000 V		
Protection		IP20	NEMA 1	

Mounting instructions

Rail	TH 35-7.5, TH 35-15
Wire stripping length	9.5 mm 0.37 in
Tool	Flat screwdriver Ø 3.5 mm Ø 0.138 in
Torque	0.4 - 0.6 N.m 3.5 - 5.3 lb.in

The connecting capacity data for one Rigid: Solid/Stranded, or one Flexible conductor (when applicable is a mandatory information required by IEC, UL and CSA standards (Copper conductors). All other data are provided as supplementary information only. For more details, please consult our CB, UL or CSA certificates and technical datasheet available on http://www.TE.com

RoHS RoHS Gost R

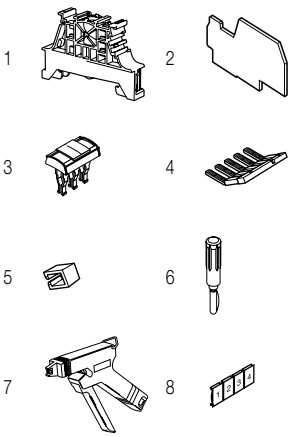

Accessories

	Description			Color	Type	Part Number		Pkg pce	Weight (1 pce) g
1	**End stops**	10 mm	0.394 in	Dark grey	BAM4	1SNK900001R0000		50	14.00
		5.2 mm	0.205 in		BAZ1	1SNK900002R0000		50	5.30
2	**End sections**	2 mm	0.079 in	Grey	FEDAD4	1SNA199352R0000		20	2.30
3	**Jumper bars**	2 poles	13.5 A	Orange	BJADO5-2	1SNA205955R0300		20	1.00
		3 poles			BJADO5-3	1SNA205956R0400		20	1.00
		10 poles			BJADO5-10	1SNA205963R0300		10	5.00
4	**Lateral jumper bars**	2 poles	30 A	Grey	PC5-2	1SNA113542R1000		10	1.80
		10 poles			PC5-10	1SNA113544R1200		10	6.00
5	**Insulating tips**	For lateral jumper bars type PC...			EIP	1SNA113550R2400		10	
6	**Test plugs**	DIA 2 mm 0.079 in		Black	FC2	1SNA007865R2600		100	
7	**Tools**	Semi automatic tool			OUPAD	1SNA178944R0400		1	205.00
		Hand tool			OUMAD	1SNA179466R0600		1	29.00
8	**Terminal block markers**	Blank card		White	RC510	1SNA231000R0700		1	5.20

Complete list of accessories is indicated in the terminal block datasheet.
Some accessories such as jumper bars may modify the terminal block's ratings: complete information in the accessories catalogue pages.

Technical data valid for copper conductors only.

1SNC163014S0201 - Rev. A

D4/6.SN.ADO IDC terminal blocks

Disconnect with blade - with test socket - ADO screw clamp 6 mm 0.236 in spacing

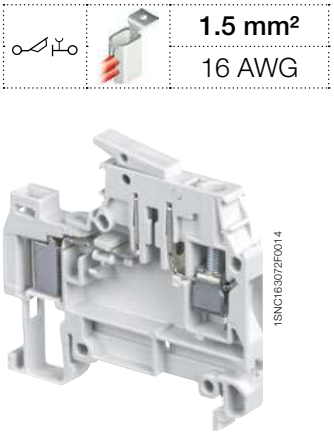

D4/6.SN.ADO

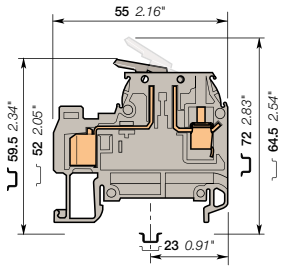

6 mm 0.236 in spacing

Description

- Ease your disconnect operations with the disconnect knife blade operated by hand,
- With the TE Connectivity ADO System®, experience the fastest and most reliable connection on the market,
- This solution brings all the benefits of the ADO System® and allows installators to connect on standard screw clamp,
- Up to 2 wires per connection in the ADO System® connection.

Ordering details

Description		Color	Type	Part Number		Pkg pce	Weight (1 pce) g
Disconnect	With test socket DIA 2 mm 0.079 in on the ADO side	Grey	D4/6.SN.ADO	1SNA199107R2400		50	9.00
		Orange	D4/6.SN.ADO	1SNA199108R0500		50	9.00

Main technical data

		IEC	UL	CSA
ADO	Rigid: Solid/Stranded	0.34-1.5 mm²	22-16 AWG	22-16 AWG
	Flexible without ferrule	0.34-1.5 mm²		
Screw clamp	Rigid: Solid/Stranded	0.2-4 mm²	22-10 AWG	22-10 AWG
	Flexible without ferrule	0.22-4 mm²		
	Flexible with insulated ferrule			
	Gauge	A4		
Rated current / Rated cross section		10 A / 1.5 mm²	10 A / 16 AWG	15 A / 16 AWG
Rated short-time withstand current (1s)		180 A		
Rated voltage		500 V	600 V	600 V
Impulse withstand voltage		6000 V		
Protection		IP20	NEMA 1	

Mounting instructions

Rail	TH 35-7.5, TH 35-15
Wire stripping length	9.5 mm 0.37 in
Tool	Flat screwdriver Ø 4 mm Ø 0.157 in
Torque	0.5 - 0.8 N.m 4.4 - 7.1 lb.in

The connecting capacity data for one Rigid: Solid/Stranded, or one Flexible conductor (when applicable) is a mandatory information required by IEC, UL and CSA standards (Copper conductors). All other data are provided as supplementary information only. For more details, please consult our CB, UL or CSA certificates and technical datasheet available on http://www.TE.com

RoHS USR CNR cCSAus Gost R

Accessories

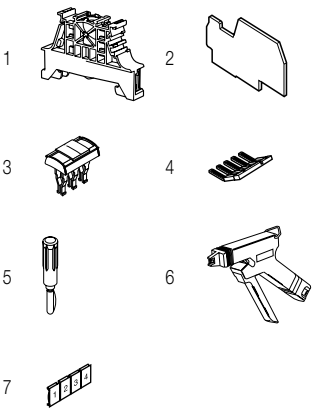

	Description			Color	Type	Part Number		Pkg pce	Weight (1 pce) g
1	**End stops**	10 mm	0.394 in	Dark grey	BAM4	1SNK900001R0000		50	14.00
		5.2 mm	0.205 in		BAZ1	1SNK900002R0000		50	5.30
2	**End sections**	2 mm	0.079 in	Grey	FEDAD4	1SNA199352R0000		20	2.30
3	**Jumper bars**	2 poles	17.5 A	Orange	BJADO6-2	1SNA205974R0600		20	1.00
		3 poles			BJADO6-3	1SNA205975R0700		20	1.00
		10 poles			BJADO6-10	1SNA205982R2700		10	6.00
4	**Lateral jumper bars**	10 poles	35 A		PC61-10	1SNA163311R2200		10	5.00
5	**Test plugs**	DIA 2 mm	0.079 in	Black	FC2	1SNA007865R2600		100	
6	**Tools**	Semi automatic tool			OUPAD	1SNA178944R0400		1	205.00
		Hand tool			OUMAD	1SNA179466R0600		1	29.00
7	**Terminal block markers**	Blank card		White	RC610	1SNA233000R0100		1	7.50

Complete list of accessories is indicated in the terminal block datasheet.
Some accessories such as jumper bars may modify the terminal block's ratings: complete information in the accessories catalogue pages.

Technical data valid for copper conductors only.

1SNC163015S0201 - Rev. A

D4/6.SNT2.ADO IDC terminal blocks

Disconnect with blade - with test socket - ADO screw clamp 6 mm 0.236 in spacing

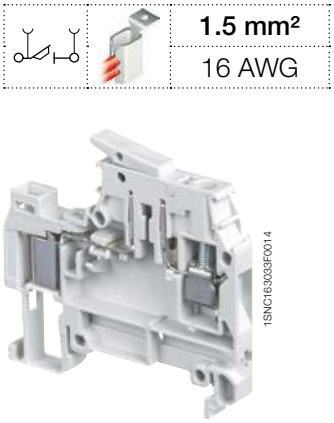

1SNC163033F0014

D4/6.SNT2.ADO

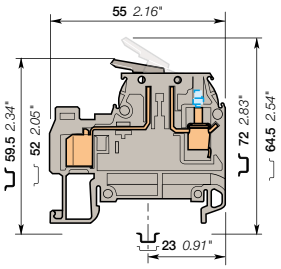

6 mm 0.236 in spacing

Description

- Ease your disconnect operations with the disconnect knife blade operated by hand,
- With the TE Connectivity ADO System®, experience the fastest and most reliable connection on the market,
- This solution brings all the benefits of the ADO System® and allows installators to connect on standard screw clamp,
- Up to 2 wires per connection in the ADO System® connection.

Ordering details

Description		Color	Type	Part Number		Pkg pce	Weight (1 pce) g
Disconnect	With 2 test sockets DIA 2 mm 0.079 in	Grey	D4/6.SNT2.ADO	1SNA199235R2300		50	9.00

Main technical data

		IEC	UL	CSA
ADO	Rigid: Solid/Stranded	0.34-1.5 mm²	22-16 AWG	22-16 AWG
	Flexible without ferrule	0.34-1.5 mm²		
Screw clamp	Rigid: Solid/Stranded	0.2-4 mm²	22-10 AWG	22-10 AWG
	Flexible without ferrule	0.22-4 mm²		
	Flexible with insulated ferrule			
	Gauge	A4		
Rated current / Rated cross section		10 A / 1.5 mm²	10 A / 16 AWG	15 A / 16 AWG
Rated short-time withstand current (1s)		180 A		
Rated voltage		500 V	600 V	600 V
Impulse withstand voltage		6000 V		
Protection		IP20	NEMA 1	

Mounting instructions

Rail	TH 35-7.5, TH 35-15
Wire stripping length	9.5 mm 0.37 in
Tool	Flat screwdriver Ø 4 mm Ø 0.157 in
Torque	0.5 - 0.8 N.m 4.4 - 7.1 lb.in

The connecting capacity data for one Rigid: Solid/Stranded, or one Flexible conductor (when applicable) is a mandatory information required by IEC, UL and CSA standards (Copper conductors). All other data are provided as supplementary information only. For more details, please consult our CB, UL or CSA certificates and technical datasheet available on http://www.TE.com

RoHS USR CNR cCSAus Gost R

Accessories

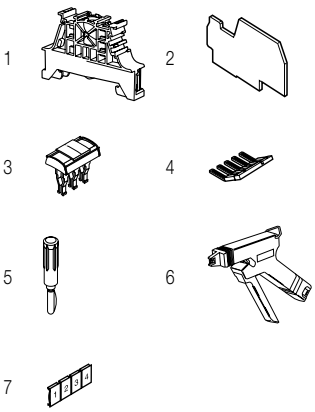

	Description			Color	Type	Part Number		Pkg pce	Weight (1 pce) g
1	**End stops**	10 mm	0.394 in	Dark grey	BAM4	1SNK900001R0000		50	14.00
		5.2 mm	0.205 in		BAZ1	1SNK900002R0000		50	5.30
2	**End sections**	2 mm	0.079 in	Grey	FEDAD4	1SNA199352R0000		20	2.30
3	**Jumper bars**	2 poles	17.5 A	Orange	BJADO6-2	1SNA205974R0600		20	1.00
		3 poles			BJADO6-3	1SNA205975R0700		20	1.00
		10 poles			BJADO6-10	1SNA205982R2700		10	6.00
4	**Lateral jumper bars**	10 poles	35 A		PC61-10	1SNA163311R2200		10	5.00
5	**Test plugs**	DIA 2 mm	0.079 in	Black	FC2	1SNA007865R2600		100	
6	**Tools**	Semi automatic tool			OUPAD	1SNA178944R0400		1	205.00
		Hand tool			OUMAD	1SNA179466R0600		1	29.00
7	**Terminal block markers**	Blank card		White	RC610	1SNA233000R0100		1	7.50

Complete list of accessories is indicated in the terminal block datasheet.
Some accessories such as jumper bars may modify the terminal block's ratings: complete information in the accessories catalogue pages.

Technical data valid for copper conductors only.

1SNC163016S0201 - Rev. A

D4/8.SN.ADO IDC terminal blocks

Disconnect with blade - with test socket - ADO screw clamp 8 mm 0.315 in spacing

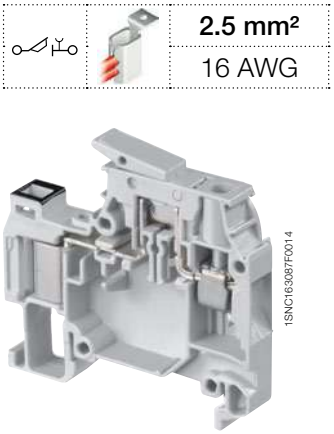

D4/8.SN.ADO

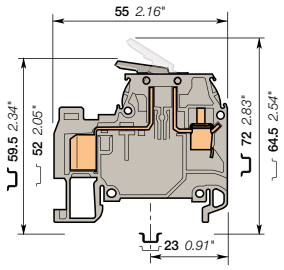

8 mm 0.315 in spacing

Description

- Ease your disconnect operations with the disconnect knife blade operated by hand,
- With the TE Connectivity ADO System®, experience the fastest and most reliable connection on the market,
- This solution brings all the benefits of the ADO System® and allows installators to connect on standard screw clamp,
- Up to 2 wires per connection in the ADO System® connection.

Ordering details

Description		Color	Type	Part Number		Pkg pce	Weight (1 pce) g
Disconnect	With test socket DIA 2 mm 0.079 in on the ADO side, with black marking for wire size 1-2.5 mm² (16-14 AWG)	Grey	D4/8.SN.ADO	1SNA199137R1100		50	11.00

Main technical data

		IEC	UL	CSA
ADO	Rigid: Solid/Stranded	1-2.5 mm²	22-16 AWG	22-16 AWG
	Flexible without ferrule	1-2.5 mm²		
Screw clamp	Rigid: Solid/Stranded	0.2-6 mm²	22-10 AWG	22-10 AWG
	Flexible without ferrule	0.22-4 mm²		
	Flexible with insulated ferrule			
	Gauge	A4		
Rated current / Rated cross section		15 A / 2.5 mm²	15 A / 16 AWG	15 A / 16 AWG
Rated short-time withstand current (1s)		300 A		
Rated voltage		500 V	600 V	600 V
Impulse withstand voltage		6000 V		
Protection		IP20	NEMA 1	

Mounting instructions

Rail		TH 35-7.5, TH 35-15
Wire stripping length		9.5 mm 0.37 in
Tool		Flat screwdriver Ø 4 mm Ø 0.157 in
Torque		0.5 - 0.8 N.m 4.4 - 7.1 lb.in

The connecting capacity data for one Rigid: Solid/Stranded, or one Flexible conductor (when applicable) is a mandatory information required by IEC, UL and CSA standards (Copper conductors). All other data are provided as supplementary information only. For more details, please consult our CB, UL or CSA certificates and technical datasheet available on http://www.TE.com

RoHS USR CNR cCSAus Gost R

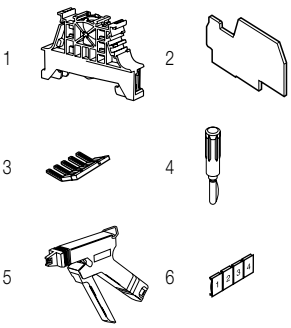

Accessories

	Description			Color	Type	Part Number		Pkg pce	Weight (1 pce) g
1	**End stops**	10 mm	0.394 in	Dark grey	BAM4	1SNK900001R0000		50	14.00
		5.2 mm	0.205 in		BAZ1	1SNK900002R0000		50	5.30
2	**End sections**	2 mm	0.079 in	Grey	FEDAD4	1SNA199352R0000		20	2.30
3	**Lateral jumper bars**	10 poles	35 A		PC81-10	1SNA173523R1100		10	5.00
4	**Test plugs**	DIA 2 mm 0.079 in		Black	FC2	1SNA007865R2600		100	
5	**Tools**	Semi automatic tool			OUPAD	1SNA178944R0400		1	205.00
		Hand tool			OUMAD	1SNA179466R0600		1	29.00
6	**Terminal block markers**	Blank card		White	RC810	1SNA234000R0200		1	8.20

Complete list of accessories is indicated in the terminal block datasheet.
Some accessories such as jumper bars may modify the terminal block's ratings: complete information in the accessories catalogue pages.

Technical data valid for copper conductors only.

D4/8.SF.I.ADO IDC terminal blocks

For 5 x 20 and 5 x 25 fuses - with test socket ADO - screw clamp 8 mm 0.315 in spacing

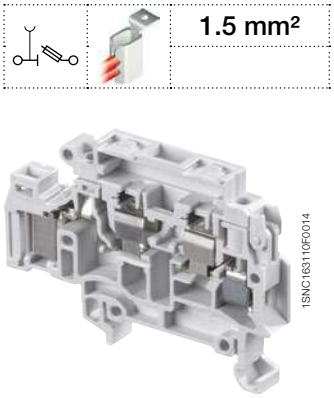

1SNC163110F0014

D4/8.SF.I.ADO

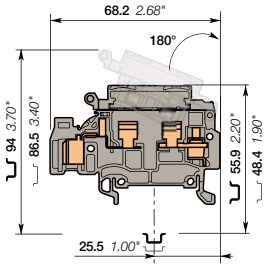

8 mm 0.315 in spacing

Description

- Protect your circuits with 5 x 20 and 5 x 25 fuse terminal blocks (fuse not delivered with the terminal blocks),
- With the TE Connectivity ADO System®, experience the fastest and most reliable connection on the market,
- This solution brings all the benefits of the ADO System® and allows installators to connect on standard screw clamp,
- Up to 2 wires per connection in the ADO System® connection.

Ordering details

Description		Color	Type	Part Number		Pkg pce	Weight (1 pce) g
Fuse	With test socket DIA 2 mm 0.079 in on the ADO side	Grey	D4/8.SF.I.ADO	1SNA399785R0300		50	13.00

Main technical data

		IEC	UL	CSA
ADO	Rigid: Solid/Stranded	0.34-1.5 mm²		
	Flexible without ferrule	0.34-1.5 mm²		
Screw clamp	Rigid: Solid/Stranded	0.2-4 mm²		
	Flexible without ferrule	0.22-4 mm²		
	Flexible with insulated ferrule			
	Gauge	A4		
Rated current / Rated cross section		6.3 A / 1.5 mm²		
Rated short-time withstand current (1s)		180 A		
Rated voltage		630 V		
Impulse withstand voltage		8000 V		
Protection		IP20	NEMA 1	

Mounting instructions

Rail	TH 35-7.5, TH 35-15
Wire stripping length	9.5 mm 0.37 in
Tool	Flat screwdriver Ø 4 mm Ø 0.157 in
Torque	0.5 - 0.8 N.m 4.4 - 7.1 lb.in

The connecting capacity data for one Rigid: Solid/Stranded, or one Flexible conductor (when applicable) is a mandatory information required by IEC, UL and CSA standards (Copper conductors). All other data are provided as supplementary information only. For more details, please consult our CB, UL or CSA certificates and technical datasheet available on http://www.TE.com

RoHS RoHS Gost R

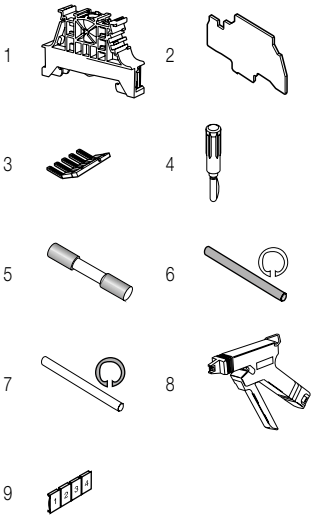

Accessories

	Description			Color	Type	Part Number		Pkg pce	Weight (1 pce) g
1	**End stops**	10 mm	0.394 in	Dark grey	BAM4	1SNK900001R0000		50	14.00
		5.2 mm	0.205 in		BAZ1	1SNK900002R0000		50	5.30
2	**End sections**	1.5 mm	0.059 in	Grey	FEDAD10	1SNA399758R2700		20	3.00
3	**Lateral jumper bars**	10 poles	35 A		PC81-10	1SNA173523R1100		10	5.00
4	**Test plugs**	DIA 2 mm 0.079 in		Black	FC2	1SNA007865R2600		100	
5	**Fuses**	0.5 A			FU520	1SNA008288R1500		10	
		1 A				1SNA008290R1300		10	
		2 A				1SNA008291R0000		10	
		3.15 A				1SNA008289R1600		10	
		5 A				1SNA008292R0100		10	
6	**Assembly rods**	2 poles			TGA8	1SNA168672R1100		10	1.00
		3 poles				1SNA168673R1200		10	
		4 poles				1SNA168674R1300		10	
7	**Spring retaining rings**				ANT	1SNA168675R1400		10	
8	**Tools**	Semi automatic tool			OUPAD	1SNA178944R0400		1	205.00
		Hand tool			OUMAD	1SNA179466R0600		1	29.00
9	**Terminal block markers**	Blank card		White	RC810	1SNA234000R0200		1	8.20

Complete list of accessories is indicated in the terminal block datasheet.
Some accessories such as jumper bars may modify the terminal block's ratings: complete information in the accessories catalogue pages.

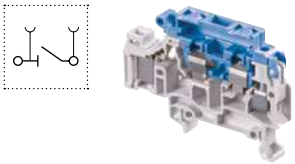

Disconnect IDC terminal blocks

Description		Color	Type	Part Number		Pkg pce	Weight (1 pce) g
Disconnect	Profile aligned with D4/8.SF...ADO	Grey, blue	D4/8.SNNT2.I.ADO	1SNA399779R2400		50	13.00

Technical data valid for copper conductors only.

1SNC163019S0201 - Rev. A

D4/8.SF.I.ADO IDC Terminal Blocks

For 5 x 20 and 5 x 25 fuses - with test socket ADO - screw clamp 8 mm 0.315 in Spacing

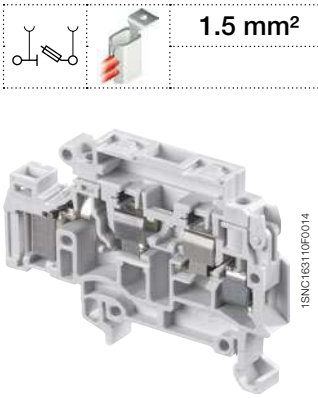

D4/8.SF.I.ADO

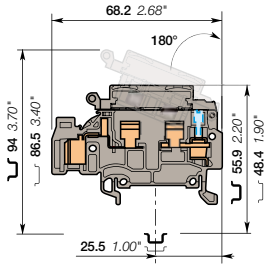

8 mm 0.315 in Spacing

1.5 mm²

Description

- Protect your circuits with 5 x 20 and 5 x 25 fuse terminal blocks (fuse not delivered with the terminal blocks),
- With the TE Connectivity ADO System®, experience the fastest and most reliable connection on the market,
- This solution brings all the benefits of the ADO System® and allows installators to connect on standard screw clamp,
- Up to 2 wires per connection in the ADO System® connection.

Ordering Details

Description		Color	Type	Part Number		Pkg pce	Weight (1 pce) g
Fuse	With 2 test sockets DIA 2 mm 0.079 in	Grey	D4/8.SFT2.I.ADO	1SNA399777R1200		50	13.00

Main Technical Data

		IEC	UL	CSA
ADO	Rigid: Solid/Stranded	0.34-1.5 mm²		
	Flexible without ferrule	0.34-1.5 mm²		
Screw clamp	Rigid: Solid/Stranded	0.2-4 mm²		
	Flexible without ferrule	0.22-4 mm²		
	Flexible with insulated ferrule			
	Gauge	A4		
Rated current / Rated cross section		6.3 A / 1.5 mm²		
Rated short-time withstand current (1s)		180 A		
Rated voltage		630 V		
Impulse withstand voltage		8000 V		
Protection		IP20	NEMA 1	

Mounting Instructions

Rail	TH 35-7.5, TH 35-15
Wire stripping length	9.5 mm 0.37 in
Tool	Flat screwdriver Ø 4 mm Ø 0.157 in
Torque	0.5 - 0.8 N.m 4.4 - 7.1 lb.in

The connecting capacity data for one Rigid: Solid/Stranded, or one Flexible conductor (when applicable) is a mandatory information required by IEC, UL and CSA standards (Copper conductors). All other data are provided as supplementary information only. For more details, please consult our CB, UL or CSA certificates and technical datasheet available on http://www.TE.com

RoHS RoHS · Gost R

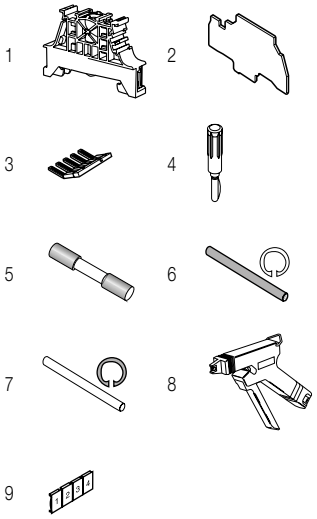

Accessories

	Description			Color	Type	Part Number		Pkg pce	Weight (1 pce) g
1	**End Stops**	10 mm	0.394 in	Dark grey	BAM4	1SNK900001R0000		50	14.00
		5.2 mm	0.205 in		BAZ1	1SNK900002R0000		50	5.30
2	**End Sections**	1.5 mm	0.059 in	Grey	FEDAD10	1SNA399758R2700		20	3.00
3	**Lateral Jumper Bars**	10 poles	35 A		PC81-10	1SNA173523R1100		10	5.00
4	**Test Plugs**	DIA 2 mm 0.079 in		Black	FC2	1SNA007865R2600		100	
5	**Fuses**	0.5 A			FU520	1SNA008288R1500		10	
		1 A				1SNA008290R1300		10	
		2 A				1SNA008291R0000		10	
		5 A				1SNA008292R0100		10	
6	**Assembly Rods**	2 poles			TGA8	1SNA168672R1100		10	1.00
		3 poles				1SNA168673R1200		10	
		4 poles				1SNA168674R1300		10	
7	**Spring Retaining Rings**				ANT	1SNA168675R1400		10	
8	**Tools**	Semi automatic tool			OUPAD	1SNA178944R0400		1	205.00
		Hand tool			OUMAD	1SNA179466R0600		1	29.00
9	**Terminal Block Markers**	Blank card		White	RC810	1SNA234000R0200		1	8.20

Complete list of accessories is indicated in the terminal block datasheet.
Some accessories such as jumper bars may modify the terminal block's ratings: complete information in the accessories catalogue pages.

Disconnect IDC Terminal Blocks

Description		Color	Type	Part Number		Pkg pce	Weight (1 pce) g
Disconnect	Profile aligned with D4/8.SF.I.ADO	Grey, Blue	D4/8.SNNT2.I.ADO	1SNA399779R2400		50	13.00

Technical data valid for copper conductors only.

1SNC163020S0201 - Rev. A

D4/8.SF.I.ADO IDC Terminal Blocks

For 5 x 20 and 5 x 25 fuses - with blown fuse indicator and test socket ADO - screw clamp - 8 mm 0.315 in spacing

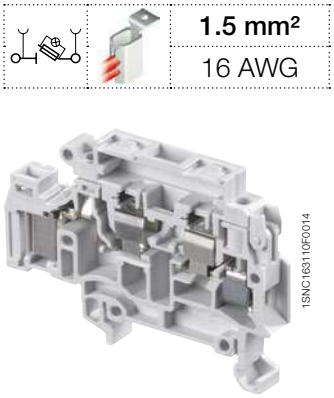

1SNC163110F0014

D4/8.SF.I.ADO

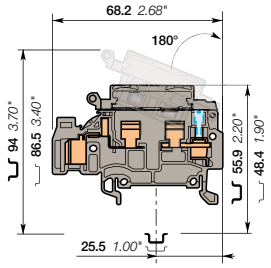

8 mm 0.315 in spacing

Description

- Protect your circuits with 5 x 20 and 5 x 25 fuse terminal blocks (fuse not delivered with the terminal blocks),
- Quickly identify the defective circuit thanks to blown fuse indicators,
- With the TE Connectivity ADO System®, experience the fastest and most reliable connection on the market,
- This solution brings all the benefits of the ADO System® and allows installators to connect on standard screw clamp,
- Up to 2 wires per connection in the ADO System® connection.

Ordering Details

Description		Color	Type	Part Number		Pkg pce	Weight (1 pce) g
Fuse	With blown fuse indicator by LED 24 V AC/DC and 2 test sockets DIA 2 mm 0.079 in	Grey	D4/8.SFDT2.I.ADO	1SNA399782R0000		50	13.00
	With blown fuse indicator by neon 110 - 230 V AC and 2 test sockets DIA 2 mm 0.079 in	Grey	D4/8.SFLT2.I.ADO	1SNA399856R0200		50	13.00

Main Technical Data

		IEC	UL	CSA
ADO	Rigid: Solid/Stranded	0.34-1.5 mm²		
	Flexible without ferrule	0.34-1.5 mm²		
Screw clamp	Rigid: Solid/Stranded	0.2-4 mm²		
	Flexible without ferrule	0.22-4 mm²		
	Flexible with insulated ferrule			
	Gauge	A4		
Rated current / Rated cross section		6.3 A / 1.5 mm²		
Rated short-time withstand current (1s)		180 A		
Rated voltage		500 V		
Impulse withstand voltage		6000 V		
Protection		IP20	NEMA 1	

Mounting Instructions

Rail	TH 35-7.5, TH 35-15
Wire stripping length	9.5 mm 0.37 in
Tool	Flat screwdriver Ø 4 mm Ø 0.157 in
Torque	0.5 - 0.8 N.m 4.4 - 7.1 lb.in

The connecting capacity data for one Rigid: Solid/Stranded, or one Flexible conductor (when applicable) is a mandatory information required by IEC, UL and CSA standards (Copper conductors). All other data are provided as supplementary information only. For more details, please consult our CB, UL or CSA certificates and technical datasheet available on http://www.TE.com

RoHS RoHS · Gost R

Leakage current: 24 V < 4.5 mA; 110 V < 0.5 mA; 230 V < 0.7 mA

Accessories

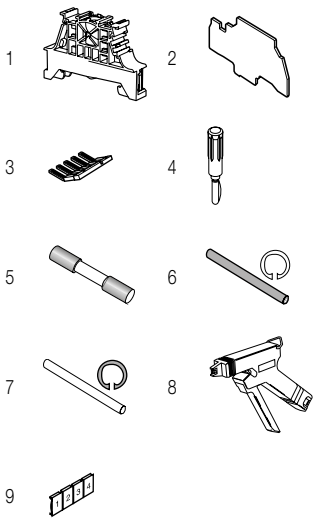

	Description			Color	Type	Part Number		Pkg pce	Weight (1 pce) g
1	**End Stops**	10 mm	0.394 in	Dark grey	BAM4	1SNK900001R0000		50	14.00
		5.2 mm	0.205 in		BAZ1	1SNK900002R0000		50	5.30
2	**End Sections**	1.5 mm	0.059 in	Grey	FEDAD10	1SNA399758R2700		20	3.00
3	**Lateral Jumper Bars**	10 poles	35 A		PC81-10	1SNA173523R1100		10	5.00
4	**Test Plugs**	DIA 2 mm 0.079 in		Black	FC2	1SNA007865R2600		100	
5	**Fuses**	0.5 A			FU520	1SNA008288R1500		10	
		1 A				1SNA008290R1300		10	
		2 A				1SNA008291R0000		10	
		3.15 A				1SNA008289R1600		10	
		5 A				1SNA008292R0100		10	
6	**Assembly Rods**	2 poles			TGA8	1SNA168672R1100		10	1.00
		3 poles				1SNA168673R1200		10	
		4 poles				1SNA168674R1300		10	
7	**Spring Retaining Rings**				ANT	1SNA168675R1400		10	
8	**Tools**	Semi automatic tool			OUPAD	1SNA178944R0400		1	205.00
		Hand tool			OUMAD	1SNA179466R0600		1	29.00
9	**Terminal Block Markers**	Blank card		White	RC810	1SNA234000R0200		1	8.20

Complete list of accessories is indicated in the terminal block datasheet.
Some accessories such as jumper bars may modify the terminal block's ratings: complete information in the accessories catalogue pages.

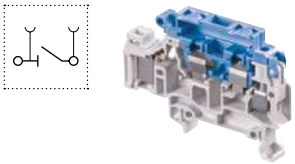

Disconnect IDC Terminal Blocks

Description		Color	Type	Part Number		Pkg pce	Weight (1 pce) g
Disconnect	Profile aligned with D4/8.SF.I.ADO	Grey, Blue	D4/8.SNNT2.I.ADO	1SNA399779R2400		50	13.00

Technical data valid for copper conductors only.

D4/8.SF.I.ADO IDC terminal blocks

For 5 x 20 and 5 x 25 fuses - with test socket ADO - screw clamp 8 mm 0.315 in spacing

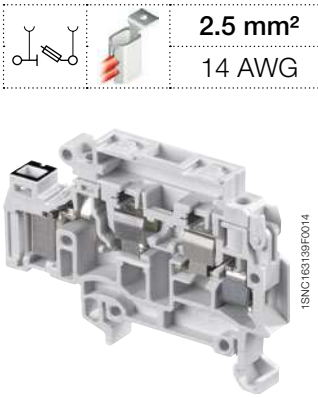

D4/8.SF.I.ADO

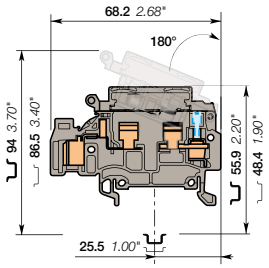

8 mm 0.315 in spacing

2.5 mm²
14 AWG

Description

- Protect your circuits with 5 x 20 and 5 x 25 fuse terminal blocks (fuse not delivered with the terminal blocks),
- With the TE Connectivity ADO System®, experience the fastest and most reliable connection on the market,
- This solution brings all the benefits of the ADO System® and allows installators to connect on standard screw clamp,
- Up to 2 wires per connection in the ADO System® connection.

Ordering details

Description		Color	Type	Part Number		Pkg pce	Weight (1 pce) g
Fuse	With 2 test sockets DIA 2 mm 0.079 in, With black marking for wire size 1-2.5 mm² (16-14 AWG)	Grey	D4/8.SFT2.I.ADO2	1SNA399762R1300		50	13.00

Main technical data

		IEC	UL	CSA
ADO	Rigid: Solid/Stranded	1-2.5 mm²		
	Flexible without ferrule	1-2.5 mm²		
Screw clamp	Rigid: Solid/Stranded	0.2-4 mm²		
	Flexible without ferrule	0.22-4 mm²		
	Flexible with insulated ferrule			
	Gauge	A4		
Rated current / Rated cross section		6.3 A / 2.5 mm²		
Rated short-time withstand current (1s)		300 A		
Rated voltage		630 V		
Impulse withstand voltage		8000 V		
Protection		IP20	NEMA 1	

Mounting instructions

Rail	TH 35-7.5, TH 35-15
Wire stripping length	9.5 mm 0.37 in
Tool	Flat screwdriver Ø 4 mm Ø 0.157 in
Torque	0.5 - 0.8 N.m 4.4 - 7.1 lb.in

The connecting capacity data for one Rigid: Solid/Stranded, or one Flexible conductor (when applicable) is a mandatory information required by IEC, UL and CSA standards (Copper conductors). All other data are provided as supplementary information only. For more details, please consult our CB, UL or CSA certificates and technical datasheet available on http://www.TE.com

RoHS RoHS Gost R

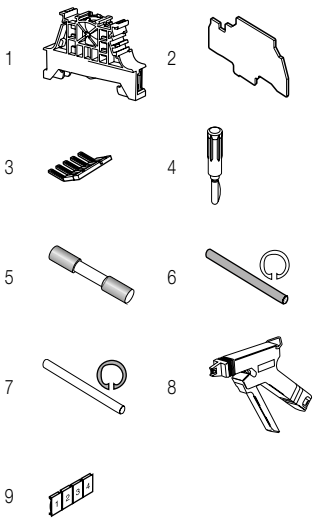

Accessories

	Description			Color	Type	Part Number		Pkg pce	Weight (1 pce) g
1	**End stops**	10 mm	0.394 in	Dark grey	BAM4	1SNK900001R0000		50	14.00
		5.2 mm	0.205 in		BAZ1	1SNK900002R0000		50	5.30
2	**End sections**	1.5 mm	0.059 in	Grey	FEDAD10	1SNA399758R2700		20	3.00
3	**Lateral jumper bars**	10 poles	35 A		PC81-10	1SNA173523R1100		10	5.00
4	**Test plugs**	DIA 2 mm	0.079 in	Black	FC2	1SNA007865R2600		100	
5	**Fuses**	0.5 A			FU520	1SNA008288R1500		10	
		1 A				1SNA008290R1300		10	
		2 A				1SNA008291R0000		10	
		3.15 A				1SNA008289R1600		10	
		5 A				1SNA008292R0100		10	
6	**Assembly rods**	2 poles			TGA8	1SNA168672R1100		10	1.00
		3 poles				1SNA168673R1200		10	
		4 poles				1SNA168674R1300		10	
7	**Spring retaining rings**				ANT	1SNA168675R1400		10	
8	**Tools**	Semi automatic tool			OUPAD	1SNA178944R0400		1	205.00
		Hand tool			OUMAD	1SNA179466R0600		1	29.00
9	**Terminal block markers**	Blank card		White	RC810	1SNA234000R0200		1	8.20

Complete list of accessories is indicated in the terminal block datasheet.
Some accessories such as jumper bars may modify the terminal block's ratings: complete information in the accessories catalogue pages.

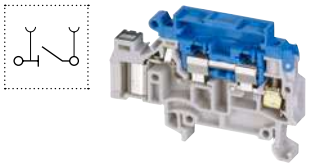

Disconnect IDC terminal blocks

Description		Color	Type	Part Number		Pkg pce	Weight (1 pce) g
Disconnect	Profile aligned with D4/8.SF.I.ADO	Grey, blue	D4/8.SNNT2.I.ADO2	1SNA399766R1700		50	13.00

Technical data valid for copper conductors only.

1SNC163022S0201 - Rev. A

D4/8.SF.I.ADO IDC terminal blocks

For 5 x 20 and 5 x 25 fuses - with test socket ADO - screw clamp 8 mm 0.315 in spacing

2.5 mm²
14 AWG

D4/8.SF.I.ADO

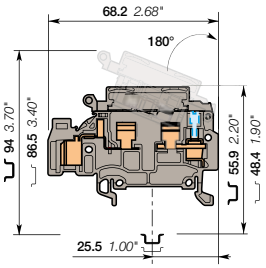

8 mm 0.315 in spacing

Description

- Protect your circuits with 5 x 20 and 5 x 25 fuse terminal blocks (fuse not delivered with the terminal blocks),
- Quickly identify the defective circuit thanks to blown fuse indicators,
- With the TE Connectivity ADO System®, experience the fastest and most reliable connection on the market,
- This solution brings all the benefits of the ADO System® and allows installators to connect on standard screw clamp,
- Up to 2 wires per connection in the ADO System® connection.

Ordering details

Description		Color	Type	Part Number		Pkg pce	Weight (1 pce) g
Fuse	With blown fuse indicator by neon 110 - 230 V AC and 2 test sockets DIA 2 mm 0.079 in, with black marking for wire size 1-2.5 mm² (16-14 AWG)	Grey	D4/8.SFLT2.I.ADO2	1SNA399768R2100		50	13.00
	With blown fuse indicator by LED 24 V AC/DC and 2 test sockets DIA 2 mm 0.079 in, with black marking for wire size 1-2.5 mm² (16-14 AWG)	Grey	D4/8.SFDT2.I.ADO2	1SNA399770R2700		50	13.00

Main technical data

		IEC	UL	CSA
ADO	Rigid: Solid/Stranded	1-2.5 mm²		
	Flexible without ferrule	1-2.5 mm²		
Screw clamp	Rigid: Solid/Stranded	0.2-4 mm²		
	Flexible without ferrule	0.22-4 mm²		
	Flexible with insulated ferrule			
	Gauge	A4		
Rated current / Rated cross section		6.3 A / 2.5 mm²		
Rated short-time withstand current (1s)		300 A		
Rated voltage		500 V		
Impulse withstand voltage		6000 V		
Protection		IP20	NEMA 1	

Mounting instructions

Rail	TH 35-7.5, TH 35-15
Wire stripping length	9.5 mm 0.37 in
Tool	Flat screwdriver Ø 4 mm Ø 0.157 in
Torque	0.5 - 0.8 N.m 4.4 - 7.1 lb.in

The connecting capacity data for one Rigid: Solid/Stranded, or one Flexible conductor (when applicable) is a mandatory information required by IEC, UL and CSA standards (Copper conductors). All other data are provided as supplementary information only. For more details, please consult our CB, UL or CSA certificates and technical datasheet available on http://www.TE.com

RoHS — Gost R

Leakage current: 24 V < 4.5 mA; 110 V < 0.5 mA; 230 V < 0.7 mA

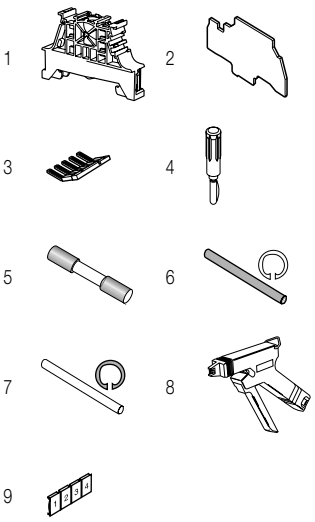

Accessories

	Description			Color	Type	Part Number		Pkg pce	Weight (1 pce) g
1	**End stops**	10 mm	0.394 in	Dark grey	BAM4	1SNK900001R0000		50	14.00
		5.2 mm	0.205 in		BAZ1	1SNK900002R0000		50	5.30
2	**End sections**	1.5 mm	0.059 in	Grey	FEDAD10	1SNA399758R2700		20	3.00
3	**Lateral jumper bars**	10 poles	35 A		PC81-10	1SNA173523R1100		10	5.00
4	**Test plugs**	DIA 2 mm	0.079 in	Black	FC2	1SNA007865R2600		100	
5	**Fuses**	0.5 A			FU520	1SNA008288R1500		10	
		1 A				1SNA008290R1300		10	
		2 A				1SNA008291R0000		10	
		3.15 A				1SNA008289R1600		10	
		5 A				1SNA008292R0100		10	
6	**Assembly rods**	2 poles			TGA8	1SNA168672R1100		10	1.00
		3 poles				1SNA168673R1200		10	
		4 poles				1SNA168674R1300		10	
7	**Spring retaining rings**				ANT	1SNA168675R1400		10	
8	**Tools**	Semi automatic tool			OUPAD	1SNA178944R0400		1	205.00
		Hand tool			OUMAD	1SNA179466R0600		1	29.00
9	**Terminal block markers**	Blank card		White	RC810	1SNA234000R0200		1	8.20

Complete list of accessories is indicated in the terminal block datasheet.
Some accessories such as jumper bars may modify the terminal block's ratings: complete information in the accessories catalogue pages.

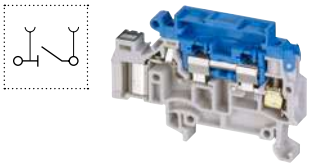

Disconnect IDC terminal blocks

Description		Color	Type	Part Number		Pkg pce	Weight (1 pce) g
Disconnect	Profile aligned with D4/8.SF.I.ADO	Grey, blue	D4/8.SNNT2.I.ADO2	1SNA399766R1700		50	13.00

Technical data valid for copper conductors only.

1SNC163023S0201 - Rev. B

D4/8.SN.I.ADO IDC terminal blocks

Disconnect with lever - with test socket - ADO screw clamp 8 mm 0.315 in spacing

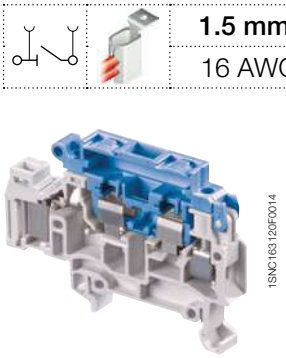

D4/8.SN.I.ADO

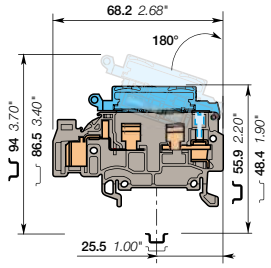

8 mm 0.315 in spacing

1.5 mm²
16 AWG

Description

- Disconnect terminal blocks aligned with fuse holder terminal blocks,
- With the TE Connectivity ADO System®, experience the fastest and most reliable connection on the market,
- This solution brings all the benefits of the ADO System® and allows installators to connect on standard screw clamp,
- Up to 2 wires per connection in the ADO System® connection.

Ordering details

Description		Color	Type	Part Number		Pkg pce	Weight (1 pce) g
Disconnect	With 2 test sockets DIA 2 mm 0.079 in	Grey, blue	D4/8.SNNT2.I.ADO	1SNA399779R2400		50	13.00

Main technical data

		IEC	UL	CSA
	Rigid: Solid/Stranded	0.34-1.5 mm²		
	Flexible without ferrule	0.34-1.5 mm²		
Screw clamp	Rigid: Solid/Stranded	0.2-4 mm²		
	Flexible without ferrule	0.22-4 mm²		
	Flexible with insulated ferrule			
	Gauge	A4		
Rated current / Rated cross section		10 A / 1.5 mm²		
Rated short-time withstand current (1s)		180 A		
Rated voltage		630 V		
Impulse withstand voltage		8000 V		
Protection		IP20	NEMA 1	

Mounting instructions

Rail	TH 35-7.5, TH 35-15
Wire stripping length	9.5 mm 0.37 in
Tool	Flat screwdriver Ø 4 mm Ø 0.157 in
Torque	0.5 - 0.8 Nm 4.4 - 7.1 lb.in

The connecting capacity data for one Rigid: Solid/Stranded, or one Flexible conductor (when applicable) is a mandatory information required by IEC, UL and CSA standards (Copper conductors). All other data are provided as supplementary information only. For more details, please consult our CB, UL or CSA certificates and technical datasheet available on http://www.TE.com

Gost R

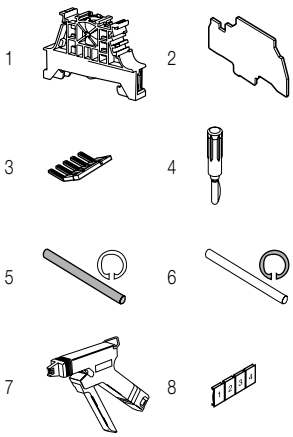

Accessories

	Description			Color	Type	Part Number		Pkg pce	Weight (1 pce) g
1	**End stops**	10 mm	0.394 in	Dark grey	BAM4	1SNK900001R0000		50	14.00
		5.2 mm	0.205 in		BAZ1	1SNK900002R0000		50	5.30
2	**End sections**	1.5 mm	0.059 in	Grey	FEDAD10	1SNA399758R2700		20	3.00
3	**Lateral jumper bars**	10 poles	35 A		PC81-10	1SNA173523R1100		10	5.00
4	**Test plugs**	DIA 2 mm	0.079 in	Black	FC2	1SNA007865R2600		100	
5	**Assembly rods**	2 poles			TGA8	1SNA168672R1100		10	1.00
		3 poles				1SNA168673R1200		10	
		4 poles				1SNA168674R1300		10	
6	**Spring retaining rings**				ANT	1SNA168675R1400		10	
7	**Tools**	Semi automatic tool			OUPAD	1SNA178944R0400		1	205.00
		Hand tool			OUMAD	1SNA179466R0600		1	29.00
8	**Terminal block markers**	Blank card		White	RC810	1SNA234000R0200		1	8.20

Complete list of accessories is indicated in the terminal block datasheet.
Some accessories such as jumper bars may modify the terminal block's ratings: complete information in the accessories catalogue pages.

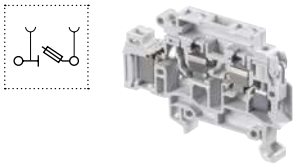

Fuse IDC terminal blocks

Description		Color	Type	Part Number		Pkg pce	Weight (1 pce) g
Fuse	Profile aligned with D4/8.SN.I.ADO	Grey	D4/8.SFT2.I.ADO	1SNA399777R1200		50	13.00

Technical data valid for copper conductors only.

1SNC163100S0201 - Rev. A

D4/8.SN.I.ADO IDC terminal blocks

Disconnect with lever - with test socket - ADO screw clamp 8 mm 0.315 in spacing

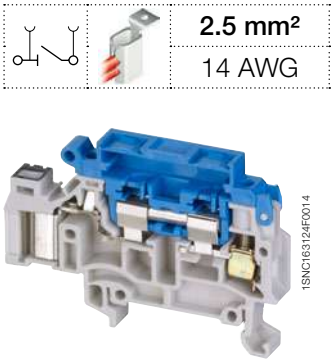

2.5 mm²
14 AWG

D4/8.SN.I.ADO

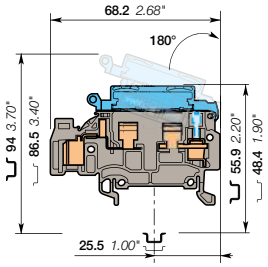

8 mm 0.315 in spacing

Description

- Disconnect terminal blocks aligned with fuse holder terminal blocks,
- With the TE Connectivity ADO System®, experience the fastest and most reliable connection on the market,
- This solution brings all the benefits of the ADO System® and allows installators to connect on standard screw clamp,
- Up to 2 wires per connection in the ADO System® connection.

Ordering details

Description		Color	Type	Part Number		Pkg pce	Weight (1 pce) g
Disconnect	With 2 test sockets DIA 2 mm 0.079 in, with black marking for wire size 1-2.5 mm² (16-14 AWG)	Grey, blue	D4/8.SNNT2.I.ADO2	1SNA399766R1700		50	13.00

Main technical data

		IEC	UL	CSA
ADO	Rigid: Solid/Stranded	1-2.5 mm²		
	Flexible without ferrule	1-2.5 mm²		
Screw clamp	Rigid: Solid/Stranded	0.2-4 mm²		
	Flexible without ferrule	0.22-4 mm²		
	Flexible with insulated ferrule			
	Gauge	A4		
Rated current / Rated cross section		6.3 A / 2.5 mm²		
Rated short-time withstand current (1s)		300 A		
Rated voltage		630 V		
Impulse withstand voltage		8000 V		
Protection		IP20	NEMA 1	

Mounting instructions

Rail	TH 35-7.5, TH 35-15
Wire stripping length	9.5 mm 0.37 in
Tool	Flat screwdriver Ø 4 mm Ø 0.157 in
Torque	0.5 - 0.8 N.m 4.4 - 7.1 lb.in

The connecting capacity data for one Rigid: Solid/Stranded, or one Flexible conductor (when applicable) is a mandatory information required by IEC, UL and CSA standards (Copper conductors). All other data are provided as supplementary information only. For more details, please consult our CB, UL or CSA certificates and technical datasheet available on http://www.TE.com

RoHS
Gost R

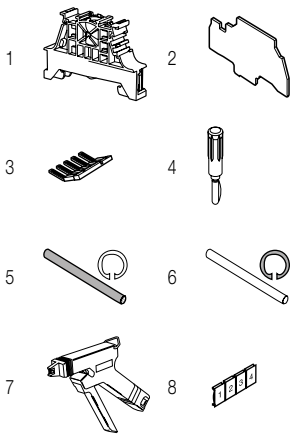

Accessories

	Description			Color	Type	Part Number		Pkg pce	Weight (1 pce) g
1	**End stops**	10 mm	0.394 in	Dark grey	BAM4	1SNK900001R0000		50	14.00
		5.2 mm	0.205 in		BAZ1	1SNK900002R0000		50	5.30
2	**End sections**	1.5 mm	0.059 in	Grey	FEDAD10	1SNA399758R2700		20	3.00
3	**Lateral jumper bars**	10 poles	35 A		PC81-10	1SNA173523R1100		10	5.00
4	**Test plugs**	DIA 2 mm	0.079 in	Black	FC2	1SNA007865R2600		100	
5	**Assembly rods**	2 poles			TGA8	1SNA168672R1100		10	1.00
		3 poles				1SNA168673R1200		10	
		4 poles				1SNA168674R1300		10	
6	**Spring retaining rings**				ANT	1SNA168675R1400		10	
7	**Tools**	Semi automatic tool			OUPAD	1SNA178944R0400		1	205.00
		Hand tool			OUMAD	1SNA179466R0600		1	29.00
8	**Terminal block markers**	Blank card		White	RC810	1SNA234000R0200		1	8.20

Complete list of accessories is indicated in the terminal block datasheet.
Some accessories such as jumper bars may modify the terminal block's ratings: complete information in the accessories catalogue pages.

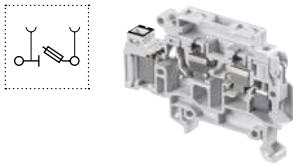

Fuse IDC terminal blocks

Description		Color	Type	Part Number		Pkg pce	Weight (1 pce) g
Fuse	Profile aligned with D4/8.SN.I.ADO	Grey	D4/8.SFT2.I.ADO2	1SNA399762R1300		50	13.00

Technical data valid for copper conductors only.

1SNC163025S0201 - Rev. A

D1/5.ADO IDC terminal blocks

Feed-through ADO - ADO - 5 mm 0.197 in spacing

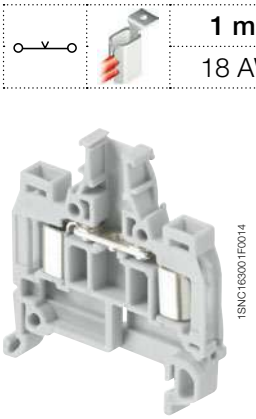

D1/5.ADO

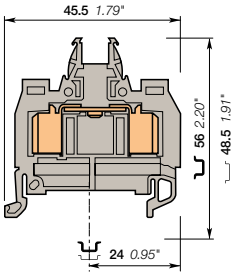

5 mm 0.197 in spacing

1 mm²	18 AWG

Description

- With the TE Connectivity ADO System®, experience the fastest and most reliable connection on the market,
- Designed for control applications exposed to severe constrains (vibrations, shocks, corrosion etc.),
- Up to 2 wires per connection.

Ordering details

Description		Color	Type	Part Number		Pkg pce	Weight (1 pce) g
Feed-through	Feed-through	Grey	D1/5.ADO	1SNA199563R2400		50	5.00
		Blue	D1/5.N.ADO	1SNA199565R2600		50	5.00
		Orange	D1/5.ADO	1SNA199564R2500		50	5.00

Main technical data

		IEC	UL	CSA
ADO	Rigid: Solid/Stranded	0.2-1 mm²		22-18 AWG
	Flexible without ferrule	0.22-1 mm²		
Screw clamp	Rigid: Solid/Stranded			
	Flexible without ferrule			
	Flexible with insulated ferrule			
	Gauge			
Rated current / Rated cross section		13.5 A / 1 mm²		7 A / 18 AWG
Rated short-time withstand current (1s)		120 A		
Rated voltage		1000 V		600 V
Impulse withstand voltage		8000 V		
Protection		IP20	NEMA 1	

Mounting instructions

Rail	TH 35-7.5, TH 35-15
Wire stripping length	
Tool	
Torque	

The connecting capacity data for one Rigid: Solid/Stranded, or one Flexible conductor (when applicable) is a mandatory information required by IEC, UL and CSA standards (Copper conductors). All other data are provided as supplementary information only. For more details, please consult our CB, UL or CSA certificates and technical datasheet available on http://www.TE.com

RoHS RoHS | cCSAus | Gost R

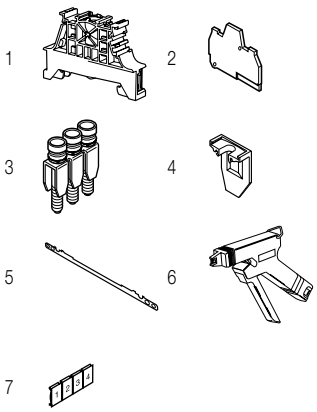

Accessories

	Description			Color	Type	Part Number		Pkg pce	Weight (1 pce) g
1	**End stops**	10 mm	0.394 in	Dark grey	BAM4	1SNK900001R0000		50	14.00
		5.2 mm	0.205 in		BAZ1	1SNK900002R0000		50	5.30
2	**End sections**	3 mm	0.118 in	Grey	FEMAD3	1SNA199341R0500		20	2.50
3	**Jumper bars**	2 poles	24 A		BJMI5-2	1SNA176278R1600		10	3.30
		3 poles			BJMI5-3	1SNA176279R1700		10	5.00
		4 poles			BJMI5-4	1SNA176280R0500		10	6.70
		5 poles			BJMI5-5	1SNA176281R2200		10	8.40
		10 poles			BJMI5-10	1SNA176282R2300		10	16.90
4	**Circuit separators**	0 mm	0 in	Grey	SCAD5	1SNA199551R2000		10	0.30
5	**Shield connectors**				CBM5	1SNA178745R1400		50	
6	**Tools**	Semi automatic tool			OUPAD	1SNA178944R0400		1	205.00
		Hand tool			OUMAD	1SNA179466R0600		1	29.00
7	**Terminal block markers**	Blank card		White	RC510	1SNA231000R0700		1	5.20

Complete list of accessories is indicated in the terminal block datasheet.
Some accessories such as jumper bars may modify the terminal block's ratings: complete information in the accessories catalogue pages.

Ground IDC terminal blocks

Description		Color	Type	Part Number		Pkg pce	Weight (1 pce) g
Ground	Profile aligned with D1/5.ADO	Green-yellow	D1/5.P.ADO	1SNA399031R2200		50	9.00

Technical data valid for copper conductors only.

1SNC163039S0201 - Rev. A

D1.5/6.ADO IDC terminal blocks

Feed-through ADO - ADO - 6 mm 0.236 in spacing

1.5 mm²
16 AWG

D1.5/6.ADO

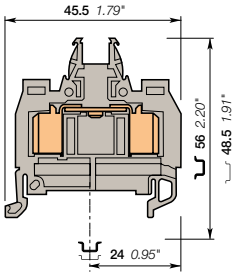

6 mm 0.236 in spacing

Description

- With the TE Connectivity ADO System®, experience the fastest and most reliable connection on the market,
- Designed for control applications exposed to severe constrains (vibrations, shocks, corrosion etc.),
- Up to 2 wires per connection.

Ordering details

Description	Color	Type	Part Number	Pkg pce	Weight (1 pce) g
Feed-through	Grey	D1.5/6.ADO	1SNA199051R2600	50	6.00
	Blue	D1.5/6.N.ADO	1SNA199053R2000	50	6.00
	Orange	D1.5/6.ADO	1SNA199052R2700	50	6.00

Main technical data

		IEC	UL	CSA
ADO	Rigid: Solid/Stranded	0.34-1.5 mm²	22-14 AWG	22-16 AWG
	Flexible without ferrule	0.34-1.5 mm²		
Screw clamp	Rigid: Solid/Stranded			
	Flexible without ferrule			
	Flexible with insulated ferrule			
	Gauge			
Rated current / Rated cross section		17.5 A / 1.5 mm²	10 A / 14 AWG	18 A / 16 AWG
Rated short-time withstand current (1s)		180 A		
Rated voltage		1000 V	600 V	600 V
Impulse withstand voltage		8000 V		
Protection		IP20	NEMA 1	

Mounting instructions

Rail	TH 35-7.5, TH 35-15
Wire stripping length	
Tool	
Torque	

The connecting capacity data for one Rigid: Solid/Stranded, or one Flexible conductor (when applicable) is a mandatory information required by IEC, UL and CSA standards (Copper conductors). All other data are provided as supplementary information only. For more details, please consult our CB, UL or CSA certificates and technical datasheet available on http://www.TE.com

RoHS RoHS · USR · cCSAus · Gost R

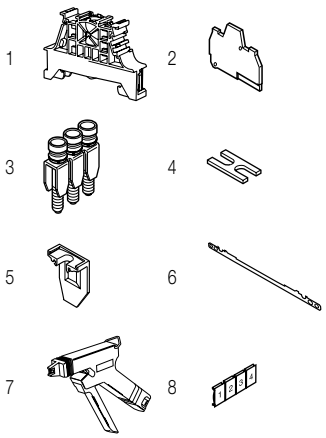

Accessories

	Description			Color	Type	Part Number	Pkg pce	Weight (1 pce) g
1	**End stops**	10 mm	0.394 in	Dark grey	BAM4	1SNK900001R0000	50	14.00
		5.2 mm	0.205 in		BAZ1	1SNK900002R0000	50	5.30
2	**End sections**	3 mm	0.118 in	Grey	FEMAD3	1SNA199341R0500	20	2.50
3	**Jumper bars**	2 poles	32 A		BJMI6-2	1SNA176663R0000	10	4.40
		3 poles			BJMI6-3	1SNA176664R0100	10	6.70
		4 poles			BJMI6-4	1SNA176665R0200	10	8.90
		5 poles			BJMI6-5	1SNA176666R0300	10	11.20
		10 poles			BJMI6-10	1SNA176667R0400	10	22.40
4	**Cross spacing jumpers**	5 mm 0.200 in - 6 mm 0.236 in - 8 mm 0.315 in			EL6	1SNA173627R2100	10	0.10
		Universal screw jumper bar kit N°I			BJDP1	1SNA179623R0300	10	7.00
		Universal screw jumper bar kit N°III			BJDP3	1SNA179625R0500	10	5.00
5	**Circuit separators**	0 mm	0 in	Grey	SCAD	1SNA196896R0000	10	
6	**Shield connectors**				CBM5	1SNA178745R1400	50	
7	**Tools**	Semi automatic tool			OUPAD	1SNA178944R0400	1	205.00
		Hand tool			OUMAD	1SNA179466R0600	1	29.00
8	**Terminal block markers**	Blank card		White	RC610	1SNA233000R0100	1	7.50

Complete list of accessories is indicated in the terminal block datasheet.
Some accessories such as jumper bars may modify the terminal block's ratings: complete information in the accessories catalogue pages.

Ground IDC terminal blocks

Description		Color	Type	Part Number	Pkg pce	Weight (1 pce) g
Ground	Profile aligned with D1.5/6.ADO	Green-yellow	D1.5/6.P.ADO	1SNA199098R2600	50	6.00

Technical data valid for copper conductors only.

1SNC163040S0201 - Rev. A

D2.5/8.ADO IDC terminal blocks

Feed-through ADO - ADO - 8 mm 0.315 in spacing

D2.5/8.ADO

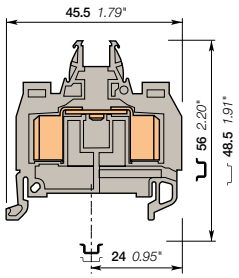

8 mm 0.315 in spacing

2.5 mm²
14 AWG

Description

- With the TE Connectivity ADO System®, experience the fastest and most reliable connection on the market,
- Designed for control applications exposed to severe constrains (vibrations, shocks, corrosion etc.),
- Up to 2 wires per connection.

Ordering details

Description		Color	Type	Part Number		Pkg pce	Weight (1 pce) g
Feed-through	With black marking for wire size 1-2.5 mm² (16-14 AWG)	Grey	D2.5/8.ADO	1SNA199059R0600		50	9.00
		Blue	D2.5/8.N.ADO	1SNA199061R2000		50	9.00
		Orange	D2.5/8.ADO	1SNA199060R0300		50	9.00

Main technical data

		IEC	UL	CSA
ADO	Rigid: Solid/Stranded	1-2.5 mm²	16-14 AWG	16-14 AWG
	Flexible without ferrule	1-2.5 mm²		
Screw clamp	Rigid: Solid/Stranded			
	Flexible without ferrule			
	Flexible with insulated ferrule			
	Gauge			
Rated current / Rated cross section		24 A / 2.5 mm²	15 A / 14 AWG	25 A / 14 AWG
Rated short-time withstand current (1s)		300 A		
Rated voltage		1000 V	600 V	600 V
Impulse withstand voltage		8000 V		
Protection		IP20	NEMA 1	

Mounting instructions

Rail	TH 35-7.5, TH 35-15
Wire stripping length	
Tool	
Torque	

The connecting capacity data for one Rigid: Solid/Stranded, or one Flexible conductor (when applicable) is a mandatory information required by IEC, UL and CSA standards (Copper conductors). All other data are provided as supplementary information only. For more details, please consult our CB, UL or CSA certificates and technical datasheet available on http://www.TE.com

RoHS RoHS · USR · cCSAus · Gost R

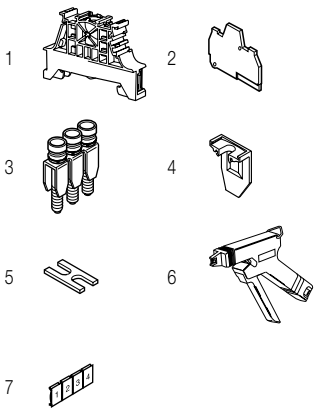

Accessories

	Description			Color	Type	Part Number		Pkg pce	Weight (1 pce) g
1	**End stops**	10 mm	0.394 in	Dark grey	BAM4	1SNK900001R0000		50	14.00
		5.2 mm	0.205 in		BAZ1	1SNK900002R0000		50	5.30
2	**End sections**	3 mm	0.118 in	Grey	FEMAD3	1SNA199341R0500		20	2.50
3	**Jumper bars**	2 poles	41 A		BJMI8-2	1SNA176669R1600		10	4.50
		3 poles			BJMI8-3	1SNA176670R1300		10	6.00
		4 poles			BJMI8-4	1SNA176671R0000		10	10.00
		5 poles			BJMI8-5	1SNA176672R0100		10	12.22
		10 poles			BJMI8-10	1SNA176673R0200		10	20.00
4	**Circuit separators**	0 mm	0 in	Grey	SCAD	1SNA196896R0000		10	
5	**Cross spacing jumpers**	5 mm 0.200 in - 6 mm 0.236 in - 8 mm 0.315 in			EL6	1SNA173627R2100		10	0.10
		Universal screw jumper bar kit N°I			BJDP1	1SNA179623R0300		10	7.00
		Universal screw jumper bar kit N°III			BJDP3	1SNA179625R0500		10	5.00
6	**Tools**	Semi automatic tool			OUPAD	1SNA178944R0400		1	205.00
		Hand tool			OUMAD	1SNA179466R0600		1	29.00
7	**Terminal block markers**	Blank card		White	RC810	1SNA234000R0200		1	8.20

Complete list of accessories is indicated in the terminal block datasheet.
Some accessories such as jumper bars may modify the terminal block's ratings: complete information in the accessories catalogue pages.

Ground IDC terminal blocks

Description		Color	Type	Part Number		Pkg pce	Weight (1 pce) g
Ground	Profile aligned with D2.5/8.ADO	Green-Yellow	D2.5/8.P.ADO	1SNA199091R1700		50	9.00

Technical data valid for copper conductors only.

1SNC163041S0201 - Rev. A

D4/8.ADO IDC terminal blocks

Feed-through ADO-ADO - 8 mm 0.315 in spacing

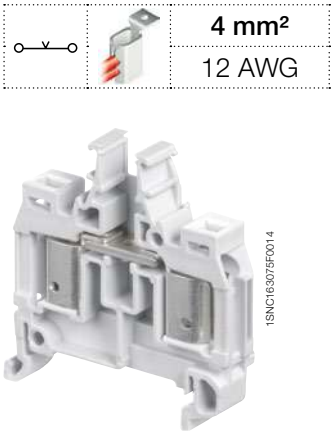

4 mm²
12 AWG

D4/8.ADO

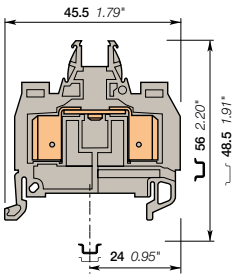

8 mm 0.315 in spacing

Description

- With the TE Connectivity ADO System®, experience the fastest and most reliable connection on the market,
- Designed for control applications exposed to severe constrains (vibrations, shocks, corrosion etc.).

Ordering details

Description		Color	Type	Part Number		Pkg pce	Weight (1 pce) g
Feed-through	With white marking for wire size 4 mm² (12 AWG)	Grey	D4/8.ADO	1SNA399244R1400		50	9.00
		Blue	D4/8.N.ADO	1SNA399318R1600		50	9.00
		Orange	D4/8.ADO	1SNA399801R0400		50	9.00

Main technical data

		IEC	UL	CSA
ADO	Rigid: Solid/Stranded	4 mm²		14-12 AWG
	Flexible without ferrule	4 mm²		
Screw clamp	Rigid: Solid/Stranded			
	Flexible without ferrule			
	Flexible with insulated ferrule			
	Gauge			
Rated current / Rated cross section		32 A / 4 mm²		25 A / 12 AWG
Rated short-time withstand current (1s)		480 A		
Rated voltage		1000 V		600 V
Impulse withstand voltage		8000 V		
Protection		IP20	NEMA 1	

Mounting instructions

Rail		TH 35-7.5, TH 35-15
Wire stripping length		
Tool		
Torque		

The connecting capacity data for one Rigid: Solid/Stranded, or one Flexible conductor (when applicable) is a mandatory information required by IEC, UL and CSA standards (Copper conductors). All other data are provided as supplementary information only. For more details, please consult our CB, UL or CSA certificates and technical datasheet available on http://www.TE.com

RoHS RoHS | cCSAus | Gost R

Accessories

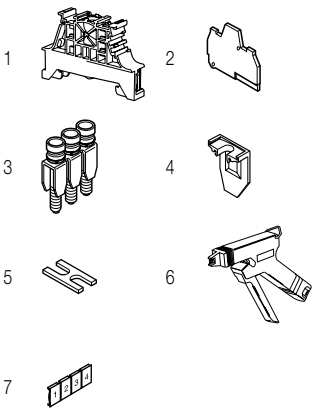

	Description			Color	Type	Part Number		Pkg pce	Weight (1 pce) g
1	**End stops**	10 mm	0.394 in	Dark grey	BAM4	1SNK900001R0000		50	14.00
		5.2 mm	0.205 in		BAZ1	1SNK900002R0000		50	5.30
2	**End sections**	3 mm	0.118 in	Grey	FEMAD3	1SNA199341R0500		20	2.50
3	**Jumper bars**	2 poles	41 A		BJMI8-2	1SNA176669R1600		10	4.50
		3 poles			BJMI8-3	1SNA176670R1300		10	6.00
		4 poles			BJMI8-4	1SNA176671R0000		10	10.00
		5 poles			BJMI8-5	1SNA176672R0100		10	12.22
		10 poles			BJMI8-10	1SNA176673R0200		10	20.00
4	**Circuit separators**	0 mm	0 in	Grey	SCAD	1SNA196896R0000		10	
5	**Cross spacing jumpers**	5 mm 0.200 in - 6 mm 0.236 in - 8 mm 0.315 in			EL6	1SNA173627R2100		10	0.10
		Universal screw jumper bar kit N°I			BJDP1	1SNA179623R0300		10	7.00
		Universal screw jumper bar kit N°III			BJDP3	1SNA179625R0500		10	5.00
6	**Tools**	Semi automatic tool			OUPAD	1SNA178944R0400		1	205.00
		Hand tool			OUMAD	1SNA179466R0600		1	29.00
7	**Terminal block markers**	Blank card		White	RC810	1SNA234000R0200		1	8.20

Complete list of accessories is indicated in the terminal block datasheet.
Some accessories such as jumper bars may modify the terminal block's ratings: complete information in the accessories catalogue pages.

Ground IDC terminal blocks

Description		Color	Type	Part Number		Pkg pce	Weight (1 pce) g
Ground	Profile aligned with D4/8.ADO	Green-Yellow	D4/8.P.ADO	1SNA399250R2600		50	9.00

Technical data valid for copper conductors only.

1SNC163042S0201 - Rev. A

D1/5.P.ADO IDC terminal blocks

Ground ADO-ADO - 5 mm 0.197 in spacing

D1/5.P.ADO

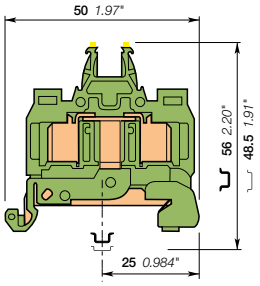

5 mm 0.197 in spacing

	1 mm²
	18 AWG

Description

- Protect your installation in the event of a short-circuit thanks to our screwless rail contact non operator dependent,
- Secure mounting or removal from the rail,
- With the TE Connectivity ADO System®, experience the fastest and most reliable connection on the market,
- Up to 2 wires per connection.

Ordering details

Description		Color	Type	Part Number		Pkg pce	Weight (1 pce) g
Ground	Screwless rail connection	Green-yellow	D1/5.P.ADO	1SNA399031R2200		50	9.00

Main technical data

		IEC	UL	CSA
ADO	Rigid: Solid/Stranded	0.2-1 mm²		22-18 AWG
	Flexible without ferrule	0.22-1 mm²		
Screw clamp	Rigid: Solid/Stranded			
	Flexible without ferrule			
	Flexible with insulated ferrule			
	Gauge			
Rated cross section		1 mm²		18 AWG
Rated short-time withstand current (1s)		120 A		
Protection		IP20	NEMA 1	

Mounting instructions

Rail	TH 35-7.5, TH 35-15
Wire stripping length	
Tool	
Torque	

The connecting capacity data for one Rigid: Solid/Stranded, or one Flexible conductor (when applicable) is a mandatory information required by IEC, UL and CSA standards (Copper conductors). All other data are provided as supplementary information only. For more details, please consult our CB, UL or CSA certificates and technical datasheet available on http://www.TE.com

RoHS cCSAus Gost R

Accessories

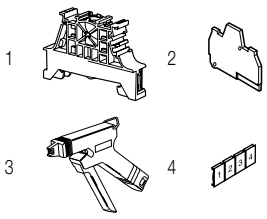

	Description			Color	Type	Part Number		Pkg pce	Weight (1 pce) g
1	**End stops**	10 mm	0.394 in	Dark grey	BAM4	1SNK900001R0000		50	14.00
		5.2 mm	0.205 in		BAZ1	1SNK900002R0000		50	5.30
2	**End sections**	3 mm	0.118 in	Grey	FEMAD3	1SNA199341R0500		20	2.50
3	**Tools**	Semi automatic tool			OUPAD	1SNA178944R0400		1	205.00
		Hand tool			OUMAD	1SNA179466R0600		1	29.00
4	**Terminal block markers**	Blank card		White	RC510	1SNA231000R0700		1	5.20

Complete list of accessories is indicated in the terminal block datasheet.
Some accessories such as jumper bars may modify the terminal block's ratings: complete information in the accessories catalogue pages.

Technical data valid for copper conductors only.

1SNC163048S0201 - Rev. A

D1.5/6.P.ADO IDC terminal blocks

Ground ADO-ADO - 6 mm 0.236 in spacing

1.5 mm²
16 AWG

D1.5/6.P.ADO

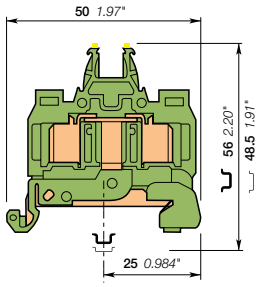

6 mm 0.236 in spacing

Description

- Protect your installation in the event of a short-circuit thanks to our screwless rail contact non operator dependent,
- Secure mounting or removal from the rail,
- With the TE Connectivity ADO System®, experience the fastest and most reliable connection on the market,
- Up to 2 wires per connection.

Ordering details

Description		Color	Type	Part Number		Pkg pce	Weight (1 pce) g
Ground	Screwless rail connection	Green-yellow	D1.5/6.P.ADO	1SNA199098R2600		50	6.00

Main technical data

		IEC	UL	CSA
ADO	Rigid: Solid/Stranded	0.34-1.5 mm²	22-16 AWG	22-16 AWG
	Flexible without ferrule	0.34-1.5 mm²		
Screw clamp	Rigid: Solid/Stranded			
	Flexible without ferrule			
	Flexible with insulated ferrule			
	Gauge			
Rated cross section		1.5 mm²	16 AWG	16 AWG
Rated short-time withstand current (1s)		180 A		
Protection		IP20	NEMA 1	

Mounting instructions

Rail		TH 35-7.5, TH 35-15
Wire stripping length		
Tool		
Torque		

The connecting capacity data for one Rigid: Solid/Stranded, or one Flexible conductor (when applicable) is a mandatory information required by IEC, UL and CSA standards (Copper conductors). All other data are provided as supplementary information only. For more details, please consult our CB, UL or CSA certificates and technical datasheet available on http://www.TE.com

RoHS USR cCSAus Gost R

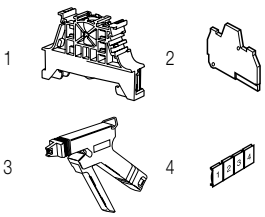

Accessories

	Description			Color	Type	Part Number		Pkg pce	Weight (1 pce) g
1	**End stops**	10 mm	0.394 in	Dark grey	BAM4	1SNK900001R0000		50	14.00
		5.2 mm	0.205 in		BAZ1	1SNK900002R0000		50	5.30
2	**End sections**	3 mm	0.118 in	Grey	FEMAD3	1SNA199341R0500		20	2.50
3	**Tools**	Semi automatic tool			OUPAD	1SNA178944R0400		1	205.00
		Hand tool			OUMAD	1SNA179466R0600		1	29.00
4	**Terminal block markers**	Blank card		White	RC610	1SNA233000R0100		1	7.50

Complete list of accessories is indicated in the terminal block datasheet.
Some accessories such as jumper bars may modify the terminal block's ratings: complete information in the accessories catalogue pages.

Technical data valid for copper conductors only.

1SNC1630495 0201 - Rev. A

D2.5/8.P.ADO IDC terminal blocks

Ground ADO-ADO - 8 mm 0.315 in spacing

D2.5/8.P.ADO

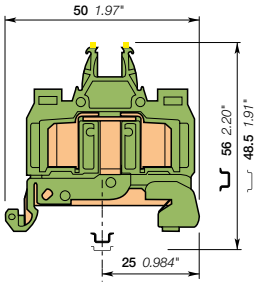

8 mm 0.315 in spacing

	2.5 mm²
	14 AWG

Description

- Protect your installation in the event of a short-circuit thanks to our screwless rail contact non operator dependent,
- Secure mounting or removal from the rail,
- With the TE Connectivity ADO System®, experience the fastest and most reliable connection on the market,
- Up to 2 wires per connection.

Ordering details

Description		Color	Type	Part Number		Pkg pce	Weight (1 pce) g
Ground	Screwless rail connection with black marking for wire size 1-2.5 mm² (16-14 AWG)	Green-yellow	D2.5/8.P.ADO	1SNA199091R1700		50	9.00

Main technical data

		IEC	UL	CSA
ADO	Rigid: Solid/Stranded	1-2.5 mm²	16-14 AWG	
	Flexible without ferrule	1-2.5 mm²		
Screw clamp	Rigid: Solid/Stranded			
	Flexible without ferrule			
	Flexible with insulated ferrule			
	Gauge			
Rated cross section		2.5 mm²	14 AWG	
Rated short-time withstand current (1s)		300 A		
Protection		IP20	NEMA 1	

Mounting instructions

Rail		TH 35-7.5, TH 35-15
Wire stripping length		
Tool		
Torque		

The connecting capacity data for one Rigid: Solid/Stranded, or one Flexible conductor (when applicable) is a mandatory information required by IEC, UL and CSA standards (Copper conductors). All other data are provided as supplementary information only. For more details, please consult our CB, UL or CSA certificates and technical datasheet available on http://www.TE.com

RoHS RoHS USR Gost R

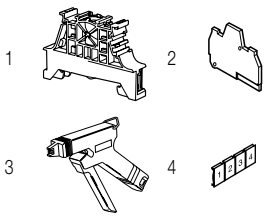

Accessories

	Description			Color	Type	Part Number		Pkg pce	Weight (1 pce) g
1	**End stops**	10 mm	0.394 in	Dark grey	BAM4	1SNK900001R0000		50	14.00
		5.2 mm	0.205 in		BAZ1	1SNK900002R0000		50	5.30
2	**End sections**	3 mm	0.118 in	Grey	FEMAD3	1SNA199341R0500		20	2.50
3	**Tools**	Semi automatic tool			OUPAD	1SNA178944R0400		1	205.00
		Hand tool			OUMAD	1SNA179466R0600		1	29.00
4	**Terminal block markers**	Blank card		White	RC810	1SNA234000R0200		1	8.20

Complete list of accessories is indicated in the terminal block datasheet.
Some accessories such as jumper bars may modify the terminal block's ratings: complete information in the accessories catalogue pages.

Technical data valid for copper conductors only.

1SNC163050S0201 - Rev. A

D4/8.P.ADO IDC terminal blocks

Ground ADO-ADO - 8 mm 0.315 in spacing

4 mm²
12 AWG

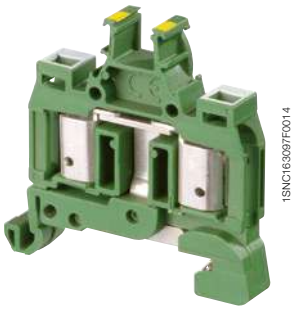

D4/8.P.ADO

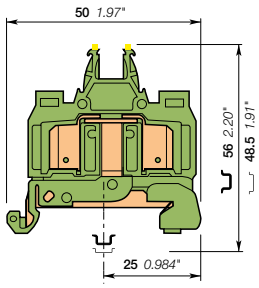

8 mm 0.315 in spacing

Description

- Protect your installation in the event of a short-circuit thanks to our screwless rail contact non operator dependent,
- Secure mounting or removal from the rail,
- With the TE Connectivity ADO System®, experience the fastest and most reliable connection on the market,

Ordering details

Description		Color	Type	Part Number		Pkg pce	Weight (1 pce) g
Ground	Screwless rail connection, with white marking for wire size 4 mm² (12 AWG)	Green-yellow	D4/8.P.ADO	1SNA399250R2600		50	9.00

Main technical data

		IEC	UL	CSA
ADO	Rigid: Solid/Stranded	4 mm²		14-12 AWG
	Flexible without ferrule	4 mm²		
Screw clamp	Rigid: Solid/Stranded			
	Flexible without ferrule			
	Flexible with insulated ferrule			
	Gauge			
Rated cross section		4 mm²		12 AWG
Rated short-time withstand current (1s)		480 A		
Protection		IP20	NEMA 1	

Mounting instructions

Rail		TH 35-7.5, TH 35-15
Wire stripping length		
Tool		
Torque		

The connecting capacity data for one Rigid: Solid/Stranded, or one Flexible conductor (when applicable) is a mandatory information required by IEC, UL and CSA standards (Copper conductors). All other data are provided as supplementary information only. For more details, please consult our CB, UL or CSA certificates and technical datasheet available on http://www.TE.com

RoHS cCSAus Gost R

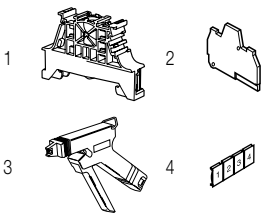

Accessories

	Description			Color	Type	Part Number		Pkg pce	Weight (1 pce) g
1	**End stops**	10 mm	0.394 in	Dark grey	BAM4	1SNK900001R0000		50	14.00
		5.2 mm	0.205 in		BAZ1	1SNK900002R0000		50	5.30
2	**End sections**	3 mm	0.118 in	Grey	FEMAD3	1SNA199341R0500		20	2.50
3	**Tools**	Semi automatic tool			OUPAD	1SNA178944R0400		1	205.00
		Hand tool			OUMAD	1SNA179466R0600		1	29.00
4	**Terminal block markers**	Blank card		White	RC810	1SNA234000R0200		1	8.20

Complete list of accessories is indicated in the terminal block datasheet.
Some accessories such as jumper bars may modify the terminal block's ratings: complete information in the accessories catalogue pages.

Technical data valid for copper conductors only.

1SNC163051S0201 - Rev. A

D1.5/6.D2.ADO IDC terminal blocks

Double deck with 2 feed-through circuits ADO-ADO 6 mm 0.236 in spacing

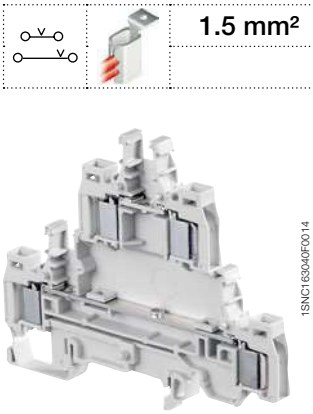

D1.5/6.D2.ADO

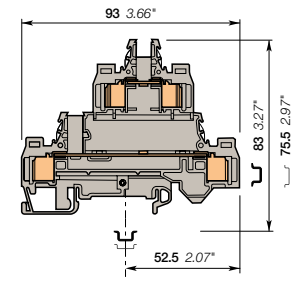

6 mm 0.236 in spacing

1.5 mm²

Description

- Save space with 2 decks terminal block,
- With the TE Connectivity ADO System®, experience the fastest and most reliable connection on the market,
- Designed for control applications exposed to severe constrains (vibrations, shocks, corrosion etc.),
- Up to 2 wires per connection.

Ordering details

Description		Color	Type	Part Number		Pkg pce	Weight (1 pce) g
Feed-through	With 2 feed-through circuits	Grey	D1.5/6.D2.ADO	1SNA199480R2600		50	18.00

Main technical data

		IEC	UL	CSA
ADO	Rigid: Solid/Stranded	0.28-1.5 mm²		
	Flexible without ferrule	0.34-1.5 mm²		
Screw clamp	Rigid: Solid/Stranded			
	Flexible without ferrule			
	Flexible with insulated ferrule			
	Gauge			
Rated current / Rated cross section		17.5 A / 1.5 mm²		
Rated short-time withstand current (1s)		180 A		
Rated voltage		800 V		
Impulse withstand voltage		6000 V		
Protection		IP20	NEMA 1	

Mounting instructions

Rail	TH 35-7.5, TH 35-15
Wire stripping length	
Tool	
Torque	

The connecting capacity data for one Rigid: Solid/Stranded, or one Flexible conductor (when applicable) is a mandatory information required by IEC, UL and CSA standards (Copper conductors). All other data are provided as supplementary information only. For more details, please consult our CB, UL or CSA certificates and technical datasheet available on http://www.TE.com

RoHS RoHS · Gost R

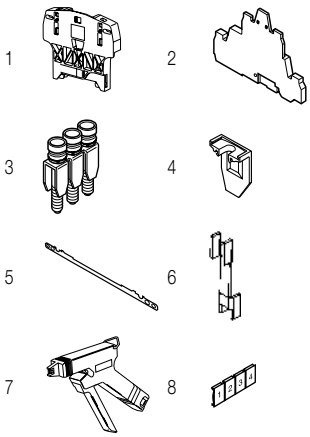

Accessories

	Description			Color	Type	Part Number		Pkg pce	Weight (1 pce) g
1	**End stops**	10 mm	0.394 in	Dark grey	BAZH1	1SNK900102R0000		20	24.00
2	**End sections**	5 mm	0.197 in	Grey	FED2AD2	1SNA199476R2500		20	7.00
3	**Jumper bars**	2 poles	32 A		BJMI6-2	1SNA176663R0000		10	4.40
		3 poles			BJMI6-3	1SNA176664R0100		10	6.70
		4 poles			BJMI6-4	1SNA176665R0200		10	8.90
		5 poles			BJMI6-5	1SNA176666R0300		10	11.20
		10 poles			BJMI6-10	1SNA176667R0400		10	22.40
4	**Circuit separators**	0 mm	0 in	Grey	SCAD	1SNA196896R0000		10	
5	**Shield connectors**				CBD2S	1SNA178408R1400		50	
6	**Inner deck jumper bars**	Inner deck jumper bars			ITVE	1SNA179694R0300		20	1.40
7	**Tools**	Semi automatic tool			OUPAD	1SNA178944R0400		1	205.00
		Hand tool			OUMAD	1SNA179466R0600		1	29.00
8	**Terminal block markers**	Blank card		White	RC610	1SNA233000R0100		1	7.50

Complete list of accessories is indicated in the terminal block datasheet.
Some accessories such as jumper bars may modify the terminal block's ratings: complete information in the accessories catalogue pages.

Technical data valid for copper conductors only.

1SNC163043S0201 - Rev. A

D1/5.SNT2.ADO IDC terminal blocks

Disconnect with blade - with test socket ADO-ADO - 5 mm 0.197 in spacing

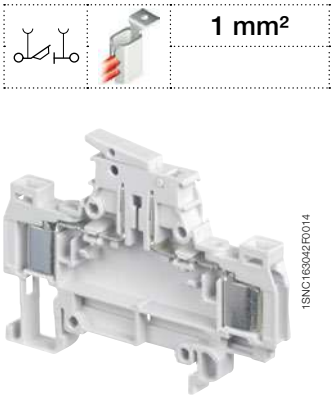

1SNC163042R014

D1/5.SNT2.ADO

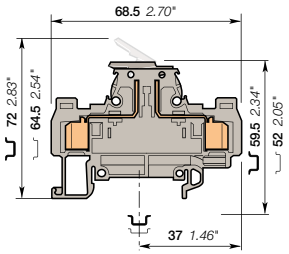

5 mm 0.197 in spacing

Description

- Ease your disconnect operations with the disconnect knife blade operated by hand,
- With the TE Connectivity ADO System®, experience the fastest and most reliable connection on the market,
- Designed for control applications exposed to severe constrains (vibrations, shocks, corrosion etc.),
- Up to 2 wires per connection.

Ordering details

Description		Color	Type	Part Number		Pkg pce	Weight (1 pce) g
Disconnect	With 2 test sockets DIA 2 mm 0.079 in	Grey	D1/5.SNT2.ADO	1SNA399231R0700		50	9.00

Main technical data

		IEC	UL	CSA
ADO	Rigid: Solid/Stranded	0.2-1 mm²		
	Flexible without ferrule	0.22-1 mm²		
Screw clamp	Rigid: Solid/Stranded			
	Flexible without ferrule			
	Flexible with insulated ferrule			
	Gauge			
Rated current / Rated cross section		10 A / 1 mm²		
Rated short-time withstand current (1s)		120 A		
Rated voltage		320 V		
Impulse withstand voltage		4000 V		
Protection		IP20	NEMA 1	

The connecting capacity data for one Rigid: Solid/Stranded, or one Flexible conductor (when applicable) is a mandatory information required by IEC, UL and CSA standards (Copper conductors). All other data are provided as supplementary information only. For more details, please consult our CB, UL or CSA certificates and technical datasheet available on http://www.TE.com

RoHS RoHS | Gost R

Mounting instructions

Rail	TH 35-7.5, TH 35-15
Wire stripping length	
Tool	
Torque	

Accessories

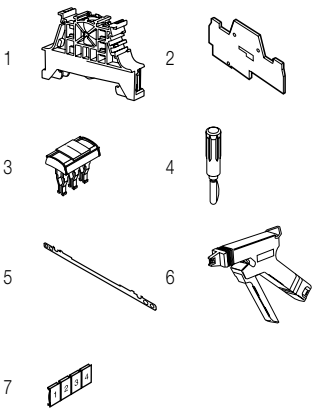

	Description			Color	Type	Part Number		Pkg pce	Weight (1 pce) g
1	**End stops**	10 mm	0.394 in	Dark grey	BAM4	1SNK900001R0000		50	14.00
		5.2 mm	0.205 in		BAZ1	1SNK900002R0000		50	5.30
2	**End sections**	2 mm	0.079 in	Grey	FEDAD5	1SNA199354R0200		20	2.70
3	**Jumper bars**	2 poles	13.5 A	Orange	BJADO5-2	1SNA205955R0300		20	1.00
		3 poles			BJADO5-3	1SNA205956R0400		20	1.00
		10 poles			BJADO5-10	1SNA205963R0300		10	5.00
4	**Test plugs**	DIA 2 mm 0.079 in		Black	FC2	1SNA007865R2600		100	
5	**Shield connectors**				CDB2	1SNA179635R0700		50	
6	**Tools**	Semi automatic tool			OUPAD	1SNA178944R0400		1	205.00
		Hand tool			OUMAD	1SNA179466R0600		1	29.00
7	**Terminal block markers**	Blank card		White	RC510	1SNA231000R0700		1	5.20

Complete list of accessories is indicated in the terminal block datasheet.
Some accessories such as jumper bars may modify the terminal block's ratings: complete information in the accessories catalogue pages.

Technical data valid for copper conductors only.

1SNC163052S0201 - Rev. A

D1.5/6.SNT2.ADO IDC terminal blocks

Disconnect with blade - with test socket ADO-ADO - 6 mm 0.236 in spacing

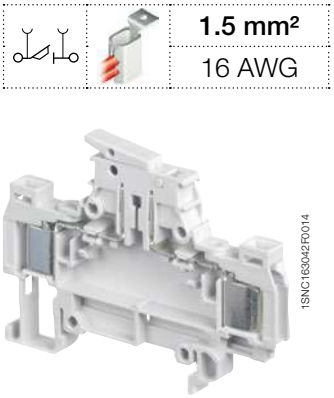

1.5 mm²
16 AWG

1SNC163042R0014

D1.5/6.SNT2.ADO

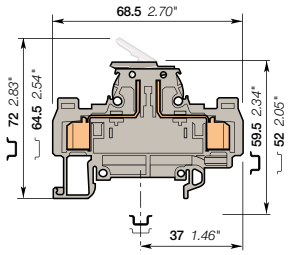

6 mm 0.236 in spacing

Description

- Ease your disconnect operations with the disconnect knife blade operated by hand,
- With the TE Connectivity ADO System®, experience the fastest and most reliable connection on the market,
- Designed for control applications exposed to severe constrains (vibrations, shocks, corrosion etc.),
- Up to 2 wires per connection.

Ordering details

Description		Color	Type	Part Number		Pkg pce	Weight (1 pce) g
Disconnect	With 2 test sockets DIA 2 mm 0.079 in	Grey	D1.5/6.SNT2.ADO	1SNA199144R2000		50	9.00

Main technical data

		IEC	UL	CSA
ADO	Rigid: Solid/Stranded	0.34-1.5 mm²	22-14 AWG	22-16 AWG
	Flexible without ferrule	0.34-1.5 mm²		
Screw clamp	Rigid: Solid/Stranded			
	Flexible without ferrule			
	Flexible with insulated ferrule			
	Gauge			
Rated current / Rated cross section		10 A / 1.5 mm²	8 A / 14 AWG	15 A / 16 AWG
Rated short-time withstand current (1s)		180 A		
Rated voltage		500 V	600 V	600 V
Impulse withstand voltage		6000 V		
Protection		IP20	NEMA 1	

Mounting instructions

Rail		TH 35-7.5, TH 35-15
Wire stripping length		
Tool		
Torque		

The connecting capacity data for one Rigid: Solid/Stranded, or one Flexible conductor (when applicable) is a mandatory information required by IEC, UL and CSA standards (Copper conductors). All other data are provided as supplementary information only. For more details, please consult our CB, UL or CSA certificates and technical datasheet available on http://www.TE.com

RoHS RoHS | USR | cCSAus | Gost R

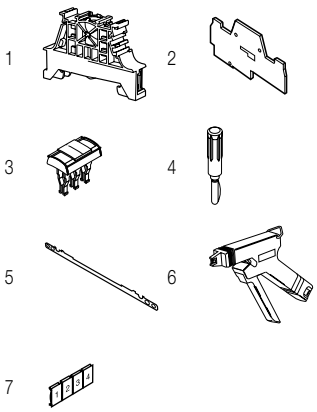

Accessories

	Description			Color	Type	Part Number		Pkg pce	Weight (1 pce) g
1	**End stops**	10 mm	0.394 in	Dark grey	BAM4	1SNK900001R0000		50	14.00
		5.2 mm	0.205 in		BAZ1	1SNK900002R0000		50	5.30
2	**End sections**	2 mm	0.079 in	Grey	FEDAD5	1SNA199354R0200		20	2.70
3	**Jumper bars**	2 poles	17.5 A	Orange	BJADO6-2	1SNA205974R0600		20	1.00
		3 poles			BJADO6-3	1SNA205975R0700		20	1.00
		10 poles			BJADO6-10	1SNA205982R2700		10	6.00
4	**Test plugs**	DIA 2 mm 0.079 in		Black	FC2	1SNA007865R2600		100	
5	**Shield connectors**				CDB2	1SNA179635R0700		50	
6	**Tools**	Semi automatic tool			OUPAD	1SNA178944R0400		1	205.00
		Hand tool			OUMAD	1SNA179466R0600		1	29.00
7	**Terminal block markers**	Blank card		White	RC610	1SNA233000R0100		1	7.50

Complete list of accessories is indicated in the terminal block datasheet.
Some accessories such as jumper bars may modify the terminal block's ratings: complete information in the accessories catalogue pages.

Technical data valid for copper conductors only.

1SNC163053S0201 - Rev. A

D2.5/8.SNT2.ADO IDC terminal blocks

Disconnect with blade - with test socket ADO-ADO 8 mm 0.315 in spacing

2.5 mm²
14 AWG

D2.5/8.SNT2.ADO

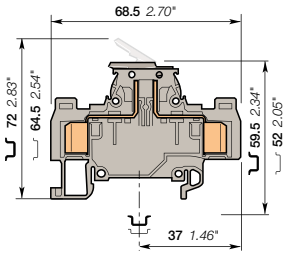

8 mm 0.315 in spacing

Description

- Ease your disconnect operations with the disconnect knife blade operated by hand,
- With the TE Connectivity ADO System®, experience the fastest and most reliable connection on the market,
- Designed for control applications exposed to severe constrains (vibrations, shocks, corrosion etc.),
- Up to 2 wires per connection.

Ordering details

Description		Color	Type	Part Number		Pkg pce	Weight (1 pce) g
Disconnect	With 2 test sockets DIA 2 mm 0.079 in With black marking for wire size 1-2.5 mm² (16-14 AWG)	Grey	D2.5/8.SNT2.ADO	1SNA199231R2700		50	12.00

Main technical data

		IEC	UL	CSA
ADO	Rigid: Solid/Stranded	1-2.5 mm²	16-14 AWG	16-14 AWG
	Flexible without ferrule	1-2.5 mm²		
Screw clamp	Rigid: Solid/Stranded			
	Flexible without ferrule			
	Flexible with insulated ferrule			
	Gauge			
Rated current / Rated cross section		15 A / 2.5 mm²	15 A / 14 AWG	15 A / 14 AWG
Rated short-time withstand current (1s)		300 A		
Rated voltage		500 V	600 V	600 V
Impulse withstand voltage		6000 V		
Protection		IP20	NEMA 1	

Mounting instructions

Rail	TH 35-7.5, TH 35-15
Wire stripping length	
Tool	
Torque	

The connecting capacity data for one Rigid: Solid/Stranded, or one Flexible conductor (when applicable) is a mandatory information required by IEC, UL and CSA standards (Copper conductors). All other data are provided as supplementary information only. For more details, please consult our CB, UL or CSA certificates and technical datasheet available on http://www.TE.com

RoHS USR cCSAus Gost R

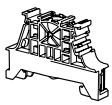

1 2 3 4 5

Accessories

	Description			Color	Type	Part Number		Pkg pce	Weight (1 pce) g
1	**End stops**	10 mm	0.394 in	Dark grey	BAM4	1SNK900001R0000		50	14.00
		5.2 mm	0.205 in		BAZ1	1SNK900002R0000		50	5.30
2	**End sections**	2 mm	0.079 in	Grey	FEDAD5	1SNA199354R0200		20	2.70
3	**Test plugs**	DIA 2 mm 0.079 in		Black	FC2	1SNA007865R2600		100	
4	**Tools**	Semi automatic tool			OUPAD	1SNA178944R0400		1	205.00
		Hand tool			OUMAD	1SNA179466R0600		1	29.00
5	**Terminal block markers**	Blank card		White	RC810	1SNA234000R0200		1	8.20

Complete list of accessories is indicated in the terminal block datasheet.
Some accessories such as jumper bars may modify the terminal block's ratings: complete information in the accessories catalogue pages.

Technical data valid for copper conductors only.

1SNC163054S0201 - Rev. A

D1.5/8.SF.ADO IDC terminal blocks

For 5 x 20 and 5 x 25 fuses - with test socket ADO-ADO - 8 mm 0.315 in spacing

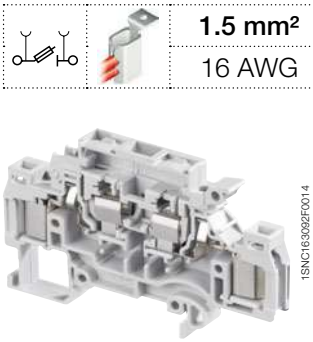

D1.5/8.SF.ADO

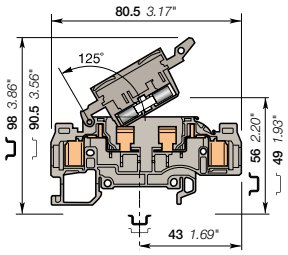

8 mm 0.315 in spacing

	1.5 mm²
	16 AWG

Description

- The TE Connectivity ADO System® fuse holders provide circuit protection for control applications,
- With the TE Connectivity ADO System®, experience the fastest and most reliable connection on the market,
- Designed for control applications exposed to severe constrains (vibrations, shocks, corrosion etc.),
- Up to 2 wires per connection.

Ordering details

Description		Color	Type	Part Number		Pkg pce	Weight (1 pce) g
Fuse	With 2 test sockets DIA 2 mm 0.079 in or DIA 2.3 mm 0.091 in	Grey	D1.5/8.SFT.ADO	1SNA199208R1100		50	13.00

Main technical data

		IEC	UL	CSA
ADO	Rigid: Solid/Stranded	0.34-1.5 mm²	22-16 AWG	22-16 AWG
	Flexible without ferrule	0.34-1.5 mm²		
Screw clamp	Rigid: Solid/Stranded			
	Flexible without ferrule			
	Flexible with insulated ferrule			
	Gauge			
Rated current / Rated cross section		6.3 A / 1.5 mm²	8 A / 16 AWG	10 A / 16 AWG
Rated short-time withstand current (1s)		180 A		
Rated voltage		630 V	600 V	600 V
Impulse withstand voltage		8000 V		
Protection		IP20	NEMA 1	

Mounting instructions

Rail	TH 35-7.5, TH 35-15
Wire stripping length	
Tool	
Torque	

The connecting capacity data for one Rigid: Solid/Stranded, or one Flexible conductor (when applicable) is a mandatory information required by IEC, UL and CSA standards (Copper conductors). All other data are provided as supplementary information only. For more details, please consult our CB, UL or CSA certificates and technical datasheet available on http://www.TE.com

RoHS USR cCSAus Gost R

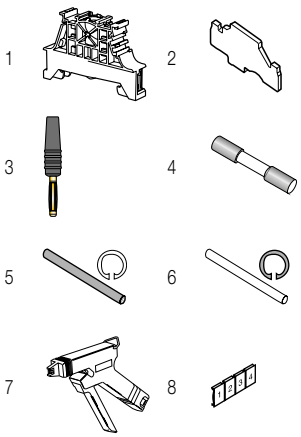

Accessories

	Description			Color	Type	Part Number		Pkg pce	Weight (1 pce) g
1	**End stops**	10 mm	0.394 in	Dark grey	BAM4	1SNK900001R0000		50	14.00
		5.2 mm	0.205 in		BAZ1	1SNK900002R0000		50	5.30
2	**End sections**	1.5 mm	0.059 in	Grey	FEDAD7	1SNA199382R2700		20	3.80
3	**Test plugs**	DIA 2 mm 0.079 in		Black	FC2.MC	1SNA107239R0300		20	1.00
4	**Fuses**	0.5 A			FU520	1SNA008288R1500		10	
		1 A				1SNA008290R1300		10	
		2 A				1SNA008291R0000		10	
		3.15 A				1SNA008289R1600		10	
		5 A				1SNA008292R0100		10	
5	**Assembly rods**	2 poles			TGA8	1SNA168672R1100		10	1.00
		3 poles				1SNA168673R1200		10	
		4 poles				1SNA168674R1300		10	
6	**Spring retaining rings**				ANT	1SNA168675R1400		10	
7	**Tools**	Semi automatic tool			OUPAD	1SNA178944R0400		1	205.00
		Hand tool			OUMAD	1SNA179466R0600		1	29.00
8	**Terminal block markers**	Blank card		White	RC810	1SNA234000R0200		1	8.20

Complete list of accessories is indicated in the terminal block datasheet.
Some accessories such as jumper bars may modify the terminal block's ratings: complete information in the accessories catalogue pages.

Technical data valid for copper conductors only.

1SNC163056S0201 - Rev. A

D1.5/8.SF.ADO IDC terminal blocks

For 5 x 20 and 5 x 25 fuses - with blown fuse indicator and test socket ADO-ADO - 8 mm 0.315 in spacing

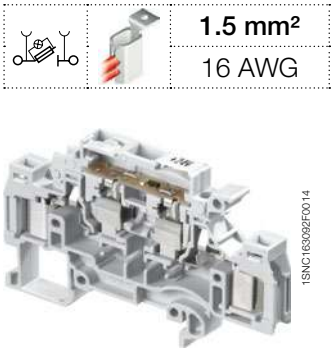

1.5 mm²
16 AWG

1SNC163092F0014

D1.5/8.SF.ADO

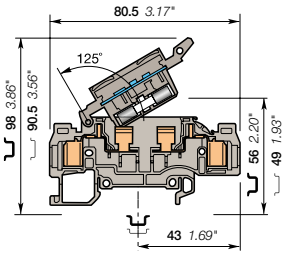

8 mm 0.315 in spacing

Description

- The TE Connectivity ADO System® fuse holders provide circuit protection for control applications,
- Quickly identify the defective circuit thanks to blown fuse indicators,
- With the TE Connectivity ADO System®, experience the fastest and most reliable connection on the market,
- Designed for control applications exposed to severe constrains (vibrations, shocks, corrosion etc.),
- Up to 2 wires per connection.

Ordering details

Description		Color	Type	Part Number		Pkg pce	Weight (1 pce) g
Fuse	With blown fuse indicator by neon 110 - 230 V AC and 2 test sockets	Grey	D1.5/8.SFLT.ADO	1SNA199211R2300		50	14.00
	With blown fuse indicator by LED 24 V AC/DC and 2 test sockets	Grey	D1.5/8.SFDT.ADO	1SNA199212R2400		50	14.00

Main technical data

		IEC	UL	CSA
ADO	Rigid: Solid/Stranded	0.34-1.5 mm²	22-16 AWG	22-16 AWG
	Flexible without ferrule	0.34-1.5 mm²		
Screw clamp	Rigid: Solid/Stranded			
	Flexible without ferrule			
	Flexible with insulated ferrule			
	Gauge			
Rated current / Rated cross section		6.3 A / 1.5 mm²	8 A / 16 AWG	10 A / 16 AWG
Rated short-time withstand current (1s)		180 A		
Rated voltage		500 V	600 V	600 V
Impulse withstand voltage		6000 V		
Protection		IP20	NEMA 1	

Mounting instructions

Rail	TH 35-7.5, TH 35-15
Wire stripping length	
Tool	
Torque	

The connecting capacity data for one Rigid: Solid/Stranded, or one Flexible conductor (when applicable) is a mandatory information required by IEC, UL and CSA standards (Copper conductors). All other data are provided as supplementary information only. For more details, please consult our CB, UL or CSA certificates and technical datasheet available on http://www.TE.com

RoHS RoHS · USR · cCSAus · Gost R

Leakage current: 24 V : < 4.5 mA / 110 V : < 0.5 mA / 230 V : < 0.7 mA

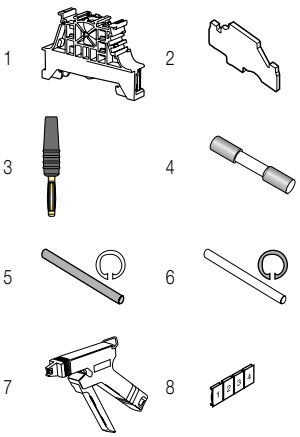

Accessories

	Description			Color	Type	Part Number		Pkg pce	Weight (1 pce) g
1	**End stops**	10 mm	0.394 in	Dark grey	BAM4	1SNK900001R0000		50	14.00
		5.2 mm	0.205 in		BAZ1	1SNK900002R0000		50	5.30
2	**End sections**	1.5 mm	0.059 in	Grey	FEDAD7	1SNA199382R2700		20	3.80
3	**Test plugs**	DIA 2 mm	0.079 in	Black	FC2.MC	1SNA107239R0300		20	1.00
4	**Fuses**	0.5 A			FU520	1SNA008288R1500		10	
		1 A				1SNA008290R1300		10	
		2 A				1SNA008291R0000		10	
		3.15 A				1SNA008289R1600		10	
		5 A				1SNA008292R0100		10	
5	**Assembly rods**	2 poles			TGA8	1SNA168672R1100		10	1.00
		3 poles				1SNA168673R1200		10	
		4 poles				1SNA168674R1300		10	
6	**Spring retaining rings**				ANT	1SNA168675R1400		10	
7	**Tools**	Semi automatic tool			OUPAD	1SNA178944R0400		1	205.00
		Hand tool			OUMAD	1SNA179466R0600		1	29.00
8	**Terminal block markers**	Blank card		White	RC810	1SNA234000R0200		1	8.20

Complete list of accessories is indicated in the terminal block datasheet.
Some accessories such as jumper bars may modify the terminal block's ratings: complete information in the accessories catalogue pages.

Technical data valid for copper conductors only.

1SNC163057S0201 - Rev. B

D2.5/8.SF.ADO2 IDC terminal blocks

For 5 x 20 and 5 x 25 fuses - with test socket ADO-ADO - 8 mm 0.315 in spacing

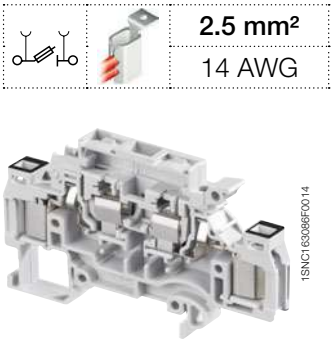

D2.5/8.SF.ADO2

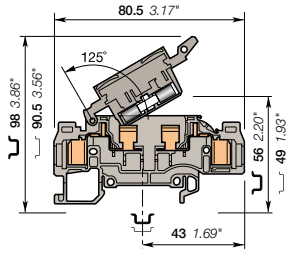

8 mm 0.315 in spacing

2.5 mm²
14 AWG

Description

- The TE Connectivity ADO System® fuse holders provide circuit protection for control applications,
- With the TE Connectivity ADO System®, experience the fastest and most reliable connection on the market,
- Designed for control applications exposed to severe constrains (vibrations, shocks, corrosion etc.),
- Up to 2 wires per connection.

Ordering details

Description		Color	Type	Part Number		Pkg pce	Weight (1 pce) g
Fuse	With 2 test sockets DIA 2 mm 0.079 in or DIA 2.3 mm 0.091 in and black marking for wire size 1-2.5 mm² (16-14 AWG)	Grey	D2.5/8.SFT.ADO2	1SNA199184R1100		50	14.00

Main technical data

		IEC	UL	CSA
ADO	Rigid: Solid/Stranded	1-2.5 mm²	16-14 AWG	16-14 AWG
	Flexible without ferrule	1-2.5 mm²		
Screw clamp	Rigid: Solid/Stranded			
	Flexible without ferrule			
	Flexible with insulated ferrule			
	Gauge			
Rated current / Rated cross section		6.3 A / 2.5 mm²	10 A / 14 AWG	10 A / 14 AWG
Rated short-time withstand current (1s)		300 A		
Rated voltage		630 V	600 V	600 V
Impulse withstand voltage		8000 V		
Protection		IP20	NEMA 1	

Mounting instructions

Rail		TH 35-7.5, TH 35-15
Wire stripping length		
Tool		
Torque		

The connecting capacity data for one Rigid: Solid/Stranded, or one Flexible conductor (when applicable) is a mandatory information required by IEC, UL and CSA standards (Copper conductors). All other data are provided as supplementary information only. For more details, please consult our CB, UL or CSA certificates and technical datasheet available on http://www.TE.com

RoHS RoHS · USR · cCSAus · Gost R

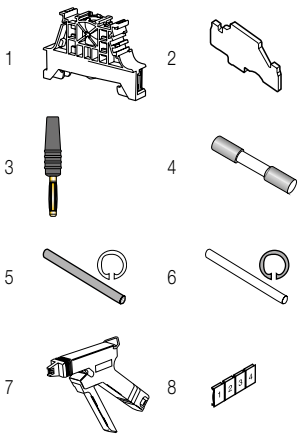

Accessories

	Description			Color	Type	Part Number		Pkg pce	Weight (1 pce) g
1	**End stops**	10 mm	0.394 in	Dark grey	BAM4	1SNK900001R0000		50	14.00
		5.2 mm	0.205 in		BAZ1	1SNK900002R0000		50	5.30
2	**End sections**	1.5 mm	0.059 in	Grey	FEDAD7	1SNA199382R2700		20	3.80
3	**Test plugs**	DIA 2 mm	0.079 in	Black	FC2.MC	1SNA107239R0300		20	1.00
4	**Fuses**	0.5 A			FU520	1SNA008288R1500		10	
		1 A				1SNA008290R1300		10	
		2 A				1SNA008291R0000		10	
		3.15 A				1SNA008289R1600		10	
		5 A				1SNA008292R0100		10	
5	**Assembly rods**	2 poles			TGA8	1SNA168672R1100		10	1.00
		3 poles				1SNA168673R1200		10	
		4 poles				1SNA168674R1300		10	
6	**Spring retaining rings**				ANT	1SNA168675R1400		10	
7	**Tools**	Semi automatic tool			OUPAD	1SNA178944R0400		1	205.00
		Hand tool			OUMAD	1SNA179466R0600		1	29.00
8	**Terminal block markers**	Blank card		White	RC810	1SNA234000R0200		1	8.20

Complete list of accessories is indicated in the terminal block datasheet.
Some accessories such as jumper bars may modify the terminal block's ratings: complete information in the accessories catalogue pages.

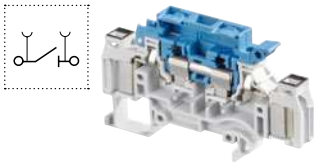

Disconnect IDC terminal blocks

Description		Color	Type	Part Number		Pkg pce	Weight (1 pce) g
Disconnect	Profile aligned with D2.5/8.SF.ADO	Grey, blue	D2.5/8.SNNT.ADO2	1SNA199186R1300		50	18.00

Technical data valid for copper conductors only.

1SNC163058S0201 - Rev. A

D2.5/8.SF.ADO2 IDC terminal blocks

For 5 x 20 and 5 x 25 fuses - with blown fuse indicator and test socket ADO-ADO - 8 mm 0.315 in spacing

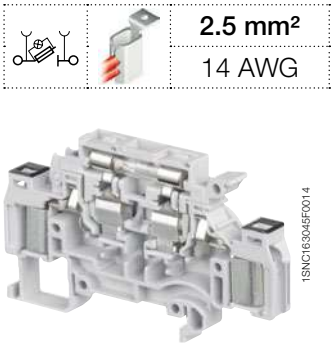

D2.5/8.SF.ADO2

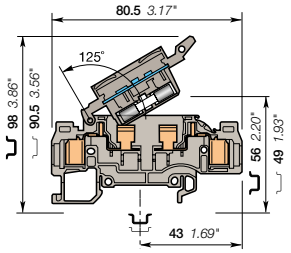

8 mm 0.315 in spacing

Description

- The TE Connectivity ADO System® fuse holders provide circuit protection for control applications,
- Quickly identify the defective circuit thanks to blown fuse indicators,
- With the TE Connectivity ADO System®, experience the fastest and most reliable connection on the market,
- Designed for control applications exposed to severe constrains (vibrations, shocks, corrosion etc.),
- Up to 2 wires per connection.

Ordering details

Description		Color	Type	Part Number		Pkg pce	Weight (1 pce) g
Fuse	With blown fuse indicator by neon 110 - 230 V AC and 2 test sockets and black marking for wire size 1-2.5 mm² (16-14 AWG)	Grey	D2.5/8.SFLT.ADO2	1SNA199187R1400		50	15.00
	With blown fuse indicator by LED 24 V AC/DC and 2 test sockets and black marking for wire size 1-2.5 mm² (16-14 AWG)	Grey	D2.5/8.SFDT.ADO2	1SNA199188R2500		50	15.00

Main technical data

		IEC	UL	CSA
ADO	Rigid: Solid/Stranded	1-2.5 mm²	16-14 AWG	16-14 AWG
	Flexible without ferrule	1-2.5 mm²		
Screw clamp	Rigid: Solid/Stranded			
	Flexible without ferrule			
	Flexible with insulated ferrule			
	Gauge			
Rated current / Rated cross section		6.3 A / 2.5 mm²	10 A / 14 AWG	10 A / 14 AWG
Rated short-time withstand current (1s)		300 A		
Rated voltage		500 V	600 V	600 V
Impulse withstand voltage		6000 V		
Protection		IP20	NEMA 1	

Mounting instructions

Rail	TH 35-7.5, TH 35-15
Wire stripping length	
Tool	
Torque	

The connecting capacity data for one Rigid: Solid/Stranded, or one Flexible conductor (when applicable) is a mandatory information required by IEC, UL and CSA standards (Copper conductors). All other data are provided as supplementary information only. For more details, please consult our CB, UL or CSA certificates and technical datasheet available on http://www.TE.com

RoHS / USR / cCSAus / Gost R

Leakage current: 24 V : < 4.5 mA / 110 V : < 0.5 mA / 230 V : < 0.7 mA

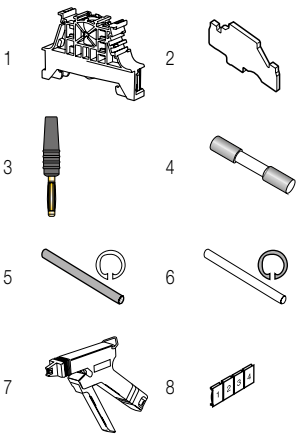

Accessories

	Description			Color	Type	Part Number		Pkg pce	Weight (1 pce) g
1	**End stops**	10 mm	0.394 in	Dark grey	BAM4	1SNK900001R0000		50	14.00
		5.2 mm	0.205 in		BAZ1	1SNK900002R0000		50	5.30
2	**End sections**	1.5 mm	0.059 in	Grey	FEDAD7	1SNA199382R2700		20	3.80
3	**Test plugs**	DIA 2 mm	0.079 in	Black	FC2.MC	1SNA107239R0300		20	1.00
4	**Fuses**	0.5 A			FU520	1SNA008288R1500		10	
		1 A				1SNA008290R1300		10	
		2 A				1SNA008291R0000		10	
		3.15 A				1SNA008289R1600		10	
		5 A				1SNA008292R0100		10	
5	**Assembly rods**	2 poles			TGA8	1SNA168672R1100		10	1.00
		3 poles				1SNA168673R1200		10	
		4 poles				1SNA168674R1300		10	
6	**Spring retaining rings**				ANT	1SNA168675R1400		10	
7	**Tools**	Semi automatic tool			OUPAD	1SNA178944R0400		1	205.00
		Hand tool			OUMAD	1SNA179466R0600		1	29.00
8	**Terminal block markers**	Blank card		White	RC810	1SNA234000R0200		1	8.20

Complete list of accessories is indicated in the terminal block datasheet.
Some accessories such as jumper bars may modify the terminal block's ratings: complete information in the accessories catalogue pages.

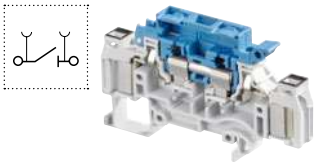

Disconnect IDC terminal blocks

Description		Color	Type	Part Number		Pkg pce	Weight (1 pce) g
Disconnect	Profile aligned with D2.5/8.SF.ADO	Grey, blue	D2.5/8.SNNT.ADO2	1SNA199186R1300		50	18.00

Technical data valid for copper conductors only.

1SNC163059S0201 - Rev. B

D2.5/8.SNNT.ADO2 IDC terminal blocks

Disconnect - with test socket ADO-ADO - 8 mm 0.315 in spacing

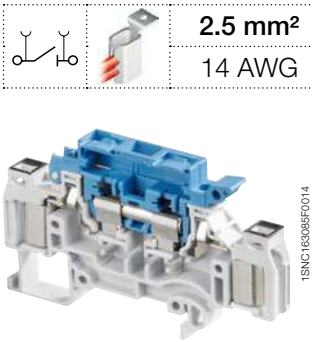

D2.5/8.SNNT.ADO2

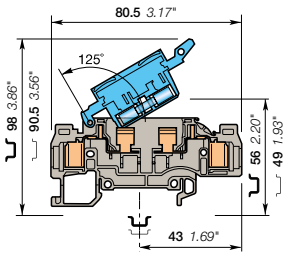

8 mm 0.315 in spacing

2.5 mm²
14 AWG

Description

- Disconnect terminal blocks aligned with fuse holder terminal blocks,
- With the TE Connectivity ADO System®, experience the fastest and most reliable connection on the market,
- Designed for control applications exposed to severe constrains (vibrations, shocks, corrosion etc.),
- Up to 2 wires per connection.

Ordering details

Description		Color	Type	Part Number		Pkg pce	Weight (1 pce) g
Disconnect	With 2 test sockets DIA 2 mm 0.079 in and black marking for wire size 1-2.5 mm² (16-14 AWG)	Grey, blue	D2.5/8.SNNT.ADO2	1SNA199186R1300		50	18.00

Main technical data

		IEC	UL	CSA
ADO	Rigid: Solid/Stranded	1-2.5 mm²	16-14 AWG	
	Flexible without ferrule	1-2.5 mm²		
Screw clamp	Rigid: Solid/Stranded			
	Flexible without ferrule			
	Flexible with insulated ferrule			
	Gauge			
Rated current / Rated cross section		10 A / 2.5 mm²	10 A / 14 AWG	
Rated short-time withstand current (1s)		300 A		
Rated voltage		630 V	600 V	
Impulse withstand voltage		8000 V		
Protection		IP20	NEMA 1	

Mounting instructions

Rail	TH 35-7.5, TH 35-15
Wire stripping length	
Tool	
Torque	

The connecting capacity data for one Rigid: Solid/Stranded, or one Flexible conductor (when applicable) is a mandatory information required by IEC, UL and CSA standards (Copper conductors). All other data are provided as supplementary information only. For more details, please consult our CB, UL or CSA certificates and technical datasheet available on http://www.TE.com

RoHS RoHS · UR USR · Gost R

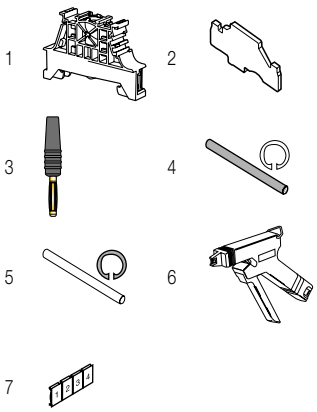

Accessories

	Description			Color	Type	Part Number		Pkg pce	Weight (1 pce) g
1	**End stops**	10 mm	0.394 in	Dark grey	BAM4	1SNK900001R0000		50	14.00
		5.2 mm	0.205 in		BAZ1	1SNK900002R0000		50	5.30
2	**End sections**	1.5 mm	0.059 in	Grey	FEDAD7	1SNA199382R2700		20	3.80
3	**Test plugs**	DIA 2 mm 0.079 in		Black	FC2.MC	1SNA107239R0300		20	1.00
4	**Assembly rods**	2 poles			TGA8	1SNA168672R1100		10	1.00
		3 poles				1SNA168673R1200		10	
		4 poles				1SNA168674R1300		10	
5	**Spring retaining rings**				ANT	1SNA168675R1400		10	
6	**Tools**	Semi automatic tool			OUPAD	1SNA178944R0400		1	205.00
		Hand tool			OUMAD	1SNA179466R0600		1	29.00
7	**Terminal block markers**	Blank card		White	RC810	1SNA234000R0200		1	8.20

Complete list of accessories is indicated in the terminal block datasheet.
Some accessories such as jumper bars may modify the terminal block's ratings: complete information in the accessories catalogue pages.

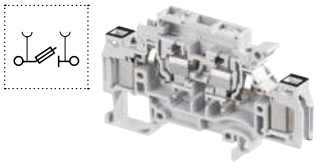

Fuse IDC terminal blocks

Description		Color	Type	Part Number		Pkg pce	Weight (1 pce) g
Fuse	Profile aligned with D2.5/8.SNNT.ADO	Grey	D2.5/8.SFT.ADO2	1SNA199184R1100		50	14.00

Technical data valid for copper conductors only.

1SNC163061S0201 - Rev. A

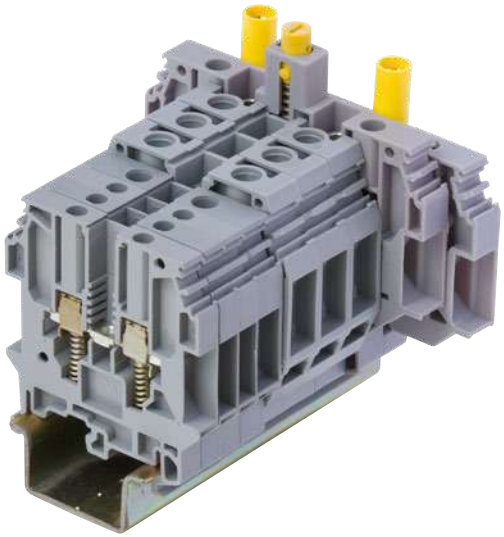

1SNC162115S0201

Dedicated applications terminal blocks
Spring loaded screw clamp technology

Technologies presentation			60
Overview			62
Feed-through			
4 mm² / 12 AWG	**M4/6.RS**		63
6 mm² / 12 AWG	**M6/8.RS**		64
10 mm² / 6 AWG	**M10/10.RS**		65
Disconnect with blade			
4 mm² / 10 AWG	**M4/6.SNTS**		66
Disconnect with push-turn knob			
6 mm² / 12 AWG	**M6/8.STP.RS**	With test	67
Disconnect with screwdriver sliding link			
6 mm² / 12 AWG	**D6/8.ST.RS**		68
	D6/8.ST1.RS.IP20	With insulated test sockets	69

1SNC162115S0201

The safest screw connection!

TE connectivity screw clamp spring loaded technology offers additional contact safety thanks to the combination of a spring under clamp preventing screw loosening and the use of special hook type ferrules providing pull-out proof termination.

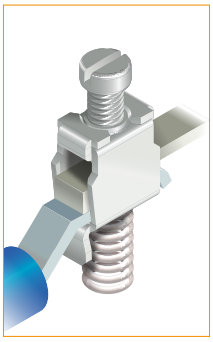

Approved by numerous national electricity providers in EU,Africa and Asia since many years.
Comply with IEC and BS TS5018 standards.

CE RoHS ISO 9001

The ultimate protection against unwanted opened circuits

Safety first!
Connection of up to **two hook type ferrules** onto screw clamp & conducting bar provide "**pull-out proof**" cable terminations.

Circuit continuity ensured
Reinforcement spring beneath the clamp maintains **permanent** contact pressure even if screw clamp is loose ensuring **long term security** of cable connections and electrical circuits.

Robust designed
Springs firmly positioned in **deep recesses** and cannot be easily removed or ejected.

Multiple plastic "ribs" compensate spring pressure and **avoid bending effect on body** leading to a **robust** terminal block body construction.

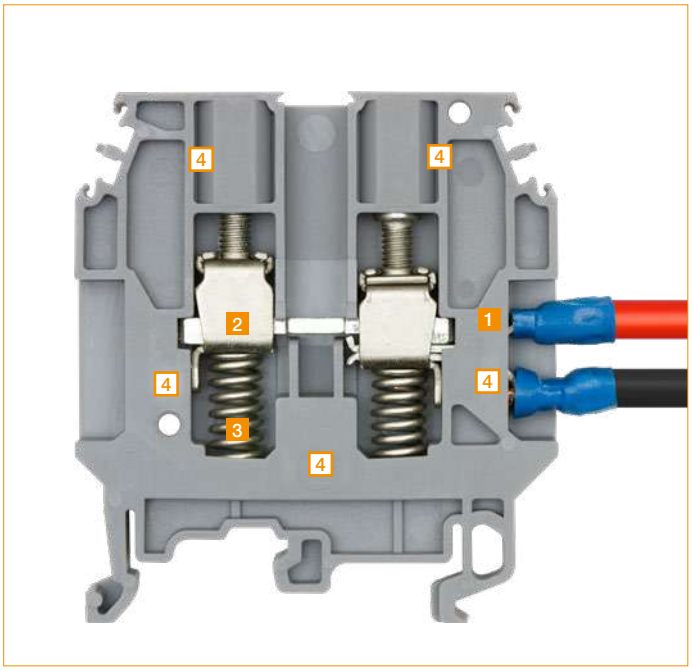

1 Hook type ferrule locked in clamp
2 Permanent contact pressure
3 Deep recesses spring position
4 Multiple reinforcements

1SNC161122S0201

TE connectivity spring loaded screw clamp technology

The safety connection for demanding working conditions

Exclusive design provide robustness and connection safety

The TE connectivity screw clamp spring loaded terminal is designed to guaranty electrical continuity even when screw are loosened unintentionally.
It features all the benefits of our screw clamp with additional vibration,shock resistant and maintenance free performances.

High density wiring

The screw clamp spring loaded terminal can fit up to two conductors equipped with bent ferrules per clamp.

Features

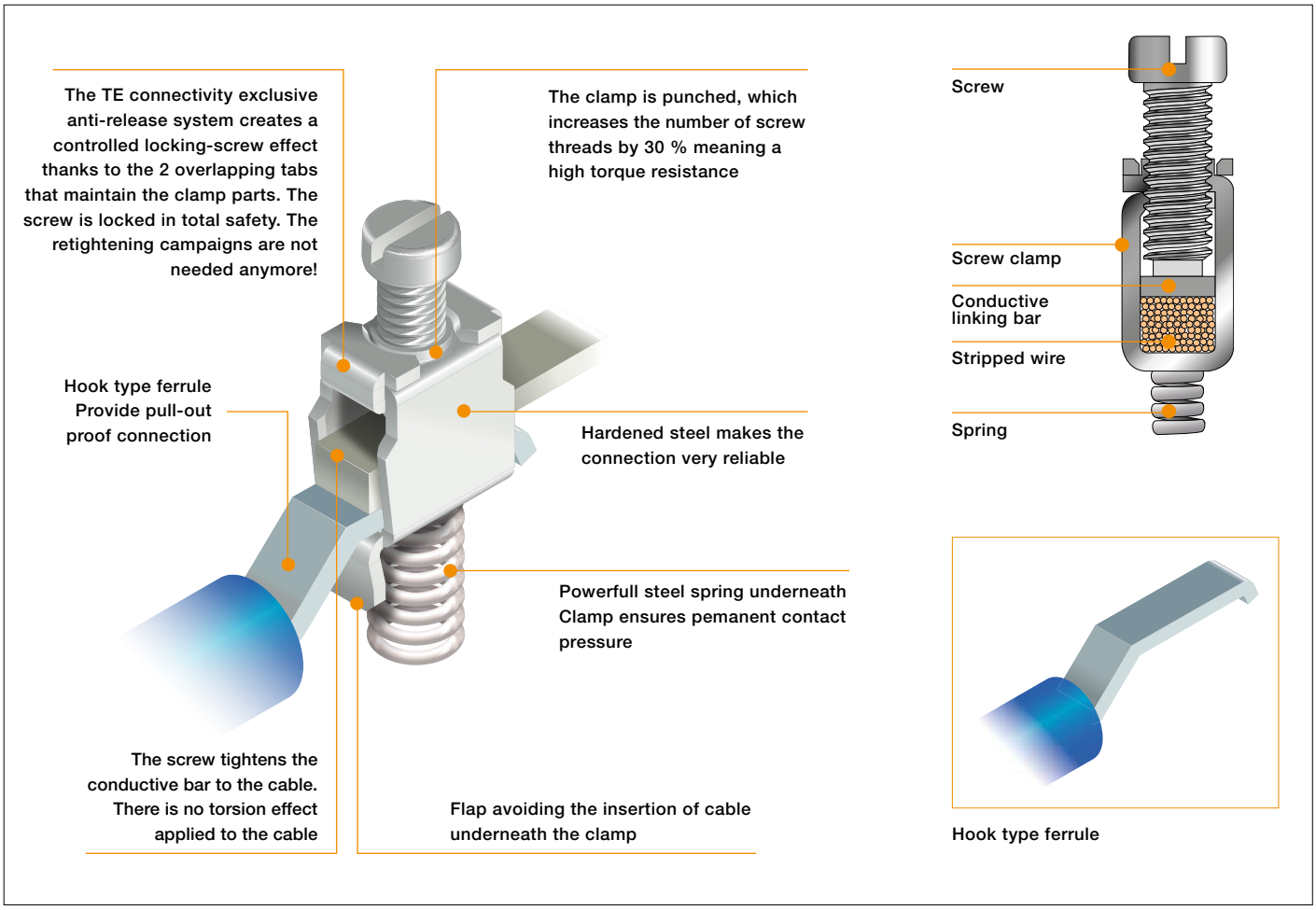

From 0.22 mm² up to 10 mm²

From 24 AWG up to 6 AWG

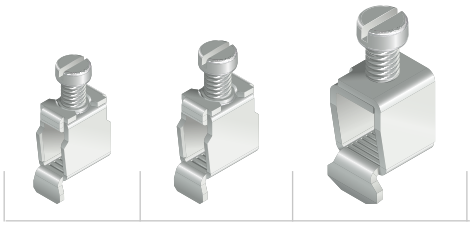

1SNC161123S0201

Section		Feed-through	Disconnect with blade	Disconnect with push-turn knob	Disconnect with screwdriver sliding link
IEC	UL/CSA				
4 mm²	12 AWG	**M4/6.RS** 6 mm 0.236 in	**M4/6.SNTS** 6 mm 0.236 in		
6 mm²	12 AWG	**M6/8.RS** 8 mm 0.315 in		**M6/8.STP.RS** 8 mm 0.315 in	**D6/8.ST.RS** 8 mm 0.315 in
10 mm²	6 AWG	**M10/10.RS** 10 mm 0.394 in			

M4/6.RS spring loaded screw clamp terminal blocks

Feed-through - 6 mm 0.236 in spacing

M4/6.RS

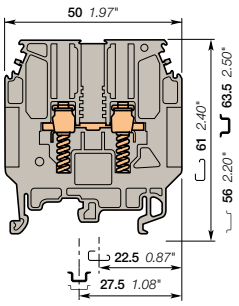

6 mm 0.236 in spacing

4 mm²

Description

- Mainly dedicated to energy applications based on BS TS5018 standard,
- Security: specific shape in linking bar to lock the hook type ferrule, spring clamp can maintain contact pressure even if screw clamp is loose.

Ordering details

Description	Color	Type	Part Number		Pkg pce	Weight (1 pce) g
Feed-through	Grey	M4/6.RS	1SNA115930R1300		50	11.00
	Blue	M4/6.N.RS	1SNA125930R1500		50	11.00

Main technical data

		IEC	BS TS 5018	CSA
1 conductor per clamp	Rigid: Solid/Stranded	0.2-4 mm²		
	Flexible without ferrule	0.22-4 mm²		
	Flexible with insulated ferrule		0.28-1.65 mm²	
	Gauge	A3		
Rated current / Rated cross section		32 A / 4 mm²	25 A	
Rated short-time withstand current (1s)		480 A		
Rated voltage		1000 V	500 V	
Impulse withstand voltage		8000 V		
Protection		IP20	NEMA 1	

Mounting instructions

Rail	G32, TH 35-7.5, TH 35-15
Wire stripping length	13 mm 0.51 in
Tool	Flat screwdriver Ø 4 mm Ø 0.157 in
Torque	0.5 - 0.8 Nm 4.4 - 7.1 lb.in

The connecting capacity data for one Rigid: Solid/Stranded, or one Flexible conductor (when applicable) is a mandatory information required by IEC, UL and CSA standards (Copper conductors). All other data are provided as supplementary information only. For more details, please consult our CB, UL or CSA certificates and technical datasheet available on http://www.TE.com

CE RoHS Gost R

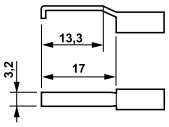

Each screw clamp holds up to 2 hook type ferrules as shown (not supplied)

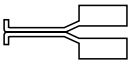

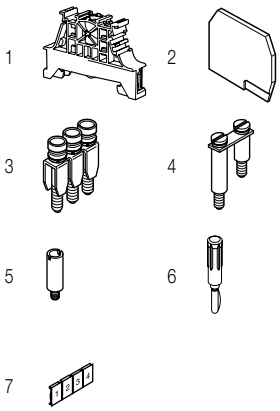

Accessories

	Description			Color	Type	Part Number		Pkg pce	Weight (1 pce) g
1	**End stops**	10 mm	0.394 in	Dark grey	BAM4	1SNK900001R0000		50	14.00
		5.2 mm	0.205 in		BAZ1	1SNK900002R0000		50	5.30
2	**End sections**	2.8 mm	0.110 in	Grey	FEMR8	1SNA116987R0200		10	3.00
3	**Jumper bars**	2 poles	32 A		BJMI6-2	1SNA176663R0000		10	4.40
		3 poles			BJMI6-3	1SNA176664R0100		10	6.70
		4 poles			BJMI6-4	1SNA176665R0200		10	8.90
		5 poles			BJMI6-5	1SNA176666R0300		10	11.20
		10 poles			BJMI6-10	1SNA176667R0400		10	22.40
4	**Cross spacing jumpers**	Universal screw jumper bar kit N°IV			BJDP4	1SNA174781R2500		10	5.00
5	**Test sockets**	DIA 2 mm 0.079 in			AL2	1SNA163043R2100		50	0.90
6	**Test plugs**	DIA 2 mm 0.079 in		Black	FC2	1SNA007865R2600		100	
7	**Terminal block markers**	Blank card		White	RC610	1SNA233000R0100		1	7.50

Complete list of accessories is indicated in the terminal block datasheet.
Some accessories such as jumper bars may modify the terminal block's ratings: complete information in the accessories catalogue pages.
Note: Use of jumper bars or cross spacing jumpers requires the user to cut the partition.

Technical data valid for copper conductors only.

1SNC161056S0201 - Rev. B

M6/8.RS spring loaded screw clamp terminal blocks

Feed-through - 8 mm 0.315 in spacing

6 mm²
12 AWG

M6/8.RS

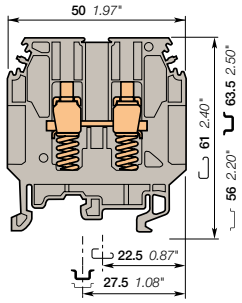

8 mm 0.315 in spacing

Description

- Mainly dedicated to energy applications based on BS TS5018 standard,
- Security: specific shape in linking bar to lock the hook type ferrule, spring clamp can maintain contact pressure even if screw clamp is loose.

Ordering details

Description	Color	Type	Part Number		Pkg pce	Weight (1 pce) g
Feed-through	Grey	M6/8.RS	1SNA115685R1200		50	17.00

Main technical data

		IEC	BS TS 5018	CSA
1 conductor per clamp	Rigid: Solid/Stranded	0.5-10 mm²		20-12 AWG
	Flexible without ferrule	0.5-6 mm²		
	Flexible with insulated ferrule		0.28-2.5 mm²	
	Gauge	A5		
Rated current / Rated cross section		41 A / 6 mm²	25 A	25 A / 12 AWG
Rated short-time withstand current (1s)		720 A		
Rated voltage		800 V	500 V	600 V
Impulse withstand voltage		8000 V		
Protection		IP20	NEMA 1	

Mounting instructions

Rail		G32, TH 35-7.5, TH 35-15
Wire stripping length		13 mm 0.51 in
Tool		Flat screwdriver Ø 4 - 5 mm Ø 0.157 - 0.197 in
Torque		0.8 - 1 Nm 7.1 - 8.9 lb.in

The connecting capacity data for one Rigid: Solid/Stranded, or one Flexible conductor (when applicable) is a mandatory information required by IEC, UL and CSA standards (Copper conductors). All other data are provided as supplementary information only. For more details, please consult our CB, UL or CSA certificates and technical datasheet available on http://www.TE.com

CE RoHS cCSAus Gost R

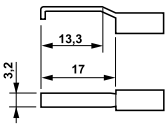

Each screw clamp holds up to 2 hook type ferrules as shown (not supplied)

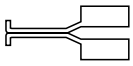

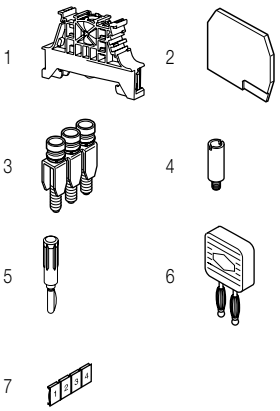

Accessories

	Description			Color	Type	Part Number		Pkg pce	Weight (1 pce) g
1	**End stops**	10 mm	0.394 in	Dark grey	BAM4	1SNK900001R0000		50	14.00
		5.2 mm	0.205 in		BAZ1	1SNK900002R0000		50	5.30
2	**End sections**	2.8 mm	0.110 in	Grey	FEMR8	1SNA116987R0200		10	3.00
3	**Jumper bars**	2 poles	41 A		BJMI8-2	1SNA176669R1600		10	4.50
		3 poles			BJMI8-3	1SNA176670R1300		10	6.00
		4 poles			BJMI8-4	1SNA176671R0000		10	10.00
		5 poles			BJMI8-5	1SNA176672R0100		10	12.22
		10 poles			BJMI8-10	1SNA176673R0200		10	20.00
4	**Test sockets**	DIA 4 mm 0.157 in			AL4-M3-R1	1SNA206722R0200		50	1.62
5	**Test plugs**	DIA 4 mm 0.157 in		White	FC4	1SNA167860R0100		10	10.00
6	**Short circuit plugs**	DIA 4 mm 0.157 in			BP8.A4	1SNA173888R2000		10	
7	**Terminal block markers**	Blank card		White	RC810	1SNA234000R0200		1	8.20

Complete list of accessories is indicated in the terminal block datasheet.
Some accessories such as jumper bars may modify the terminal block's ratings: complete information in the accessories catalogue pages.
Note: Use of jumper bars requires the user to cut the partition.

Technical data valid for copper conductors only.

1SNC161152S0201 - Rev. B

M10/10.RS spring loaded screw clamp terminal blocks

Feed-through - 10 mm 0.394 in spacing

10 mm²	
6 AWG	

M10/10.RS

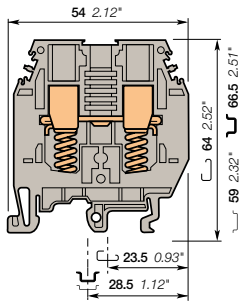

10 mm 0.394 in spacing

Description

- Mainly dedicated to energy applications based on BS TS5018 standard,
- Security: specific shape in linking bar to lock the hook type ferrule, spring clamp can maintain contact pressure even if screw clamp is loose.

Ordering details

Description	Color	Type	Part Number		Pkg pce	Weight (1 pce) g
Feed-through	Grey	M10/10.RS	1SNA115320R2700		25	30.00

Main technical data

		IEC	BS TS 5018	CSA
1 conductor per clamp	Rigid: Solid/Stranded	0.5-16 mm²		20-6 AWG
	Flexible without ferrule	0.5-10 mm²		
	Flexible with insulated ferrule		0.28-6 mm²	
	Gauge	A5		
Rated current / Rated cross section		41 A / 10 mm²	40 A	65 A / 6 AWG
Rated short-time withstand current (1s)		1200 A		
Rated voltage		800 V	500 V	600 V
Impulse withstand voltage		8000 V		
Protection		IP20	NEMA 1	

Mounting instructions

Rail	G32, TH 35-7.5, TH 35-15
Wire stripping length	14 mm 0.55 in
Tool	Flat screwdriver Ø 5.5 - 6 mm Ø 0.217 - 0.236 in
Torque	1.2 - 1.4 Nm 10.6 - 12.3 lb.in

The connecting capacity data for one Rigid: Solid/Stranded, or one Flexible conductor (when applicable) is a mandatory information required by IEC, UL and CSA standards (Copper conductors). All other data are provided as supplementary information only. For more details, please consult our CB, UL or CSA certificates and technical datasheet available on http://www.TE.com

CE | RoHS | cCSAus | Gost R

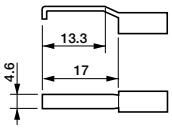

Each screw clamp holds up to 2 hook type ferrules as shown (not supplied)

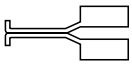

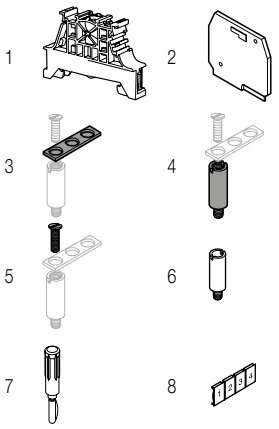

Accessories

	Description			Color	Type	Part Number		Pkg pce	Weight (1 pce) g
1	End stops	10 mm	0.394 in	Dark grey	BAM4	1SNK900001R0000		50	14.00
		5.2 mm	0.205 in		BAZ1	1SNK900002R0000		50	5.30
2	End sections	2.5 mm	0.098 in	Grey	FEMR10	1SNA114434R0500		10	3.30
3	Jumper bars (1)	2 poles	57 A		BJS10	1SNA164585R1700		10	17.00
		3 poles				1SNA164586R1000		10	17.00
		4 poles				1SNA164587R1100		10	17.00
		5 poles				1SNA168273R1100		10	17.00
		10 poles				1SNA164588R2200		10	17.00
		20 poles			BJS10-20	1SNA177654R0000		10	17.00
4	Posts (1)				PT101	1SNA163181R1100		50	1.00
5	Screws (1)				VSJ11	1SNA163394R2600		50	0.60
6	Test sockets	DIA 4 mm	0.157 in		AL4-M4	1SNA206723R0300		50	1.30
7	Test plugs	DIA 4 mm	0.157 in	White	FC4	1SNA167860R0100		10	10.00
8	Terminal block markers	Blank card		White	RC1010	1SNA238000R1600		1	1.30

Complete list of accessories is indicated in the terminal block datasheet.
Some accessories such as jumper bars may modify the terminal block's ratings: complete information in the accessories catalogue pages.
Note: Use of jumper bars requires the user to cut the partition.
(1) Complete jumper : jumper bar + post x number of poles + screw x number of poles.

Technical data valid for copper conductors only.

M4/6.SNTS spring loaded screw clamp terminal blocks

Disconnect with blade - with test socket - 6 mm 0.236 in spacing

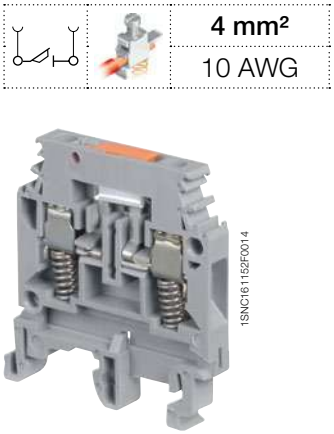

M4/6.SNTS

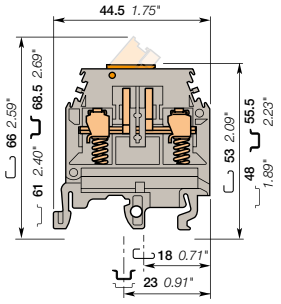

6 mm 0.236 in spacing

4 mm²
10 AWG

Description

- Mainly dedicated to energy markets for security purposes on CT circuits,
- Security: specific shape in linking bar to lock the ferrule, spring clamp can maintain contact pressure even if screw clamp is loose.

Ordering details

Description		Color	Type	Part Number		Pkg pce	Weight (1 pce) g
Disconnect	With test socket DIA 2 mm 0.079 in	Grey	M4/6.SNTS	1SNA115229R2000		50	11.00

Main technical data

		IEC	UL	CSA
1 conductor per clamp	Rigid: Solid/Stranded	0.5-4 mm²	22-10 AWG	24-10 AWG
	Flexible without ferrule	0.5-4 mm²		
	Flexible with insulated ferrule			
	Gauge			
Rated current / Rated cross section		10 A / 4 mm²	10 A / 10 AWG	15 A / 10 AWG
Rated short-time withstand current (1s)		480 A		
Rated voltage		500 V	300 V	600 V
Impulse withstand voltage				
Protection		IP20	NEMA 1	

Mounting instructions

Rail	G32, TH 35-7.5, TH 35-15
Wire stripping length	9.5 mm 0.374 in
Tool	Flat screwdriver Ø 4 mm Ø 0.157 in
Torque	0.5 - 0.6 Nm 4.4 - 5.3 lb.in

The connecting capacity data for one Rigid: Solid/Stranded, or one Flexible conductor (when applicable) is a mandatory information required by IEC, UL and CSA standards (Copper conductors). All other data are provided as supplementary information only. For more details, please consult our CB, UL or CSA certificates and technical datasheet available on http://www.TE.com

CE RoHS USR cCSAus Gost R

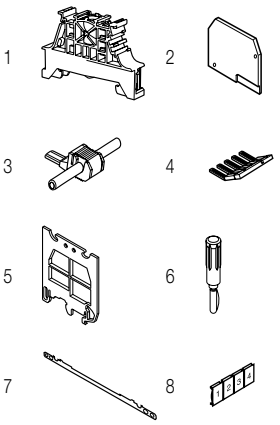

Accessories

	Description			Color	Type	Part Number		Pkg pce	Weight (1 pce) g
1	**End stops**	10 mm	0.394 in	Dark grey	BAM4	1SNK900001R0000		50	14.00
		5.2 mm	0.205 in		BAZ1	1SNK900002R0000		50	5.30
2	**End sections**	2.8 mm	0.110 in	Grey	FEM6	1SNA118368R1600		20	2.40
3	**Jumper bars**	1 poles	24 A	Grey	AD2.5	1SNA114205R2000		50	1.60
4	**Lateral jumper bars**	10 poles	35 A		PC61-10	1SNA163311R2200		10	5.00
5	**Circuit separators**	3 mm	0.118 in	Grey	SCFM6	1SNA114825R0500		20	4.00
					SCF6	1SNA118707R0300		20	
6	**Test plugs**	DIA 2 mm 0.079 in		Black	FC2	1SNA007865R2600		100	
7	**Shield connectors**				CBM5	1SNA178745R1400		50	
8	**Terminal block markers**	Blank card		White	RC610	1SNA233000R0100		1	7.50

Complete list of accessories is indicated in the terminal block datasheet.
Some accessories such as jumper bars may modify the terminal block's ratings: complete information in the accessories catalogue pages.

Technical data valid for copper conductors only.

1SNC161138S0201 - Rev. A

M6/8.STP.RS spring loaded screw clamp terminal blocks

Disconnect with push-turn knob - with test socket- 8 mm 0.315 in spacing

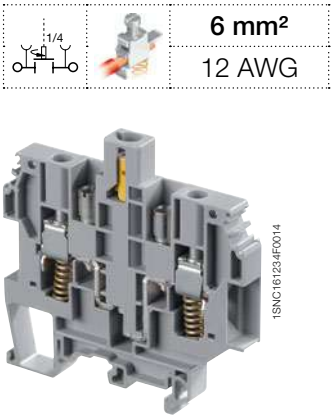

M6/8.STP.RS

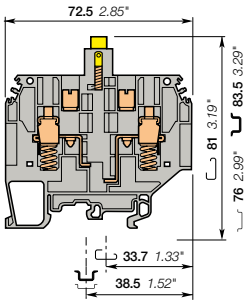

8 mm 0.315 in spacing

1/4	**6 mm²**
	12 AWG

Description

- Mainly dedicated to energy markets for security purposes on CT circuits,
- Security: specific shape in linking bar to lock the ferrule, spring clamp can maintain contact pressure even if screw clamp is loose.

Ordering details

Description		Color	Type	Part Number		Pkg pce	Weight (1 pce) g
Disconnect	With 2 test sockets DIA 4 mm 0.157 in	Grey, yellow	M6/8.STP.RS	1SNA115678R0200		25	29.00

Main technical data

		IEC	BS TS 5018	CSA
1 conductor per clamp	Rigid: Solid/Stranded	0.5-10 mm²		20-12 AWG
	Flexible without ferrule	0.5-6 mm²		
	Flexible with insulated ferrule		0.28-2.5 mm²	
	Gauge	A5		
Rated current / Rated cross section		24 A / 6 mm²	25 A	25 A / 12 AWG
Rated short-time withstand current (1s)		720 A		
Rated voltage		500 V	500 V	600 V
Impulse withstand voltage		6000 V		
Protection			NEMA	

Mounting instructions

Rail	G32, TH 35-7.5, TH 35-15
Wire stripping length	13 mm 0.512 in
Tool	Flat screwdriver Ø 4 - 5 mm Ø 0.157 - 0.197 in
Torque	0.8 - 1 Nm 7.1 - 8.9 lb.in

The connecting capacity data for one Rigid: Solid/Stranded, or one Flexible conductor (when applicable) is a mandatory information required by IEC, UL and CSA standards (Copper conductors). All other data are provided as supplementary information only. For more details, please consult our CB, UL or CSA certificates and technical datasheet available on http://www.TE.com

CE RoHS cCSAus Gost R

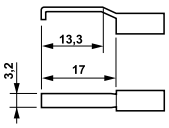

Each screw clamp holds up to 2 hook type ferrules as shown (not supplied)

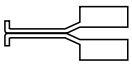

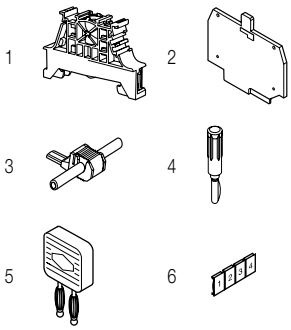

Accessories

	Description			Color	Type	Part Number		Pkg pce	Weight (1 pce) g
1	**End stops**	10 mm	0.394 in	Dark grey	BAM4	1SNK900001R0000		50	14.00
		5.2 mm	0.205 in		BAZ1	1SNK900002R0000		50	5.30
2	**End sections**	2.8 mm	0.110 in	Grey	FEMR8T	1SNA116991R0600		10	4.70
3	**Jumper bars**	1 poles	24 A	Grey	AD2.5	1SNA114205R2000		50	1.60
4	**Test plugs**	DIA 4 mm 0.157 in		White	FC4	1SNA167860R0100		10	10.00
5	**Short circuit plugs**	DIA 4 mm 0.157 in			BP8.A4	1SNA173888R2000		10	
				Red	BNSTP2	1SNA196789R2400		20	10.00
		With test DIA 4 mm 0.16 in		Beige	BNSTP1	1SNA196792R1700		20	14.00
6	**Terminal block markers**	Blank card		White	RC810	1SNA234000R0200		1	8.20

Complete list of accessories is indicated in the terminal block datasheet.
Some accessories such as jumper bars may modify the terminal block's ratings: complete information in the accessories catalogue pages.

Technical data valid for copper conductors only.

1SNC161151S0201 - Rev. A

D6/8.ST.RS spring loaded screw clamp terminal blocks

Test disconnect with a screwdriver sliding link - 8 mm 0.315 in spacing

6 mm²

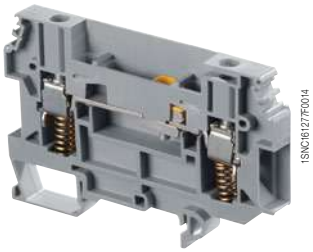

D6/8.ST.RS

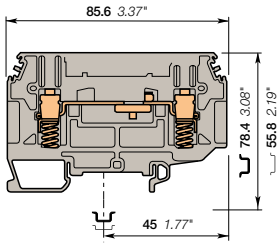

8 mm 0.315 in spacing

Description

- Mainly dedicated to energy markets for security purposes on CT circuits,
- Security: specific shape in linking bar to lock the ferrule, spring clamp can maintain contact pressure even if screw clamp is loose.

Ordering details

Description	Color	Type	Part Number		Pkg pce	Weight (1 pce) g
Disconnect	Grey	D6/8.ST.RS	1SNA115914R0700		32	28.00

Main technical data

		IEC	BS TS 5018	CSA
1 conductor per clamp	Rigid: Solid/Stranded	0.5-10 mm²		
	Flexible without ferrule	0.5-6 mm²		
	Flexible with insulated ferrule		0.28-2.5 mm²	
	Gauge	A5		
Rated current / Rated cross section		24 A / 6 mm²		
Rated short-time withstand current (1s)		720 A		
Rated voltage		400 V		
Impulse withstand voltage		6000 V		
Protection			NEMA	

Mounting instructions

Rail		G32, TH 35-7.5, TH 35-15
Wire stripping length		16 mm 0.51 in
Tool		Flat screwdriver Ø 3.5 mm Ø 0.138 in
Torque		0.8 - 1 Nm 7.1 - 8.9 lb.in

The connecting capacity data for one Rigid: Solid/Stranded, or one Flexible conductor (when applicable) is a mandatory information required by IEC, UL and CSA standards (Copper conductors). All other data are provided as supplementary information only. For more details, please consult our CB, UL or CSA certificates and technical datasheet available on http://www.TE.com

CE RoHS Gost R

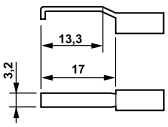

Each screw clamp holds up to 2 hook type ferrules as shown (not supplied)

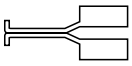

Accessories

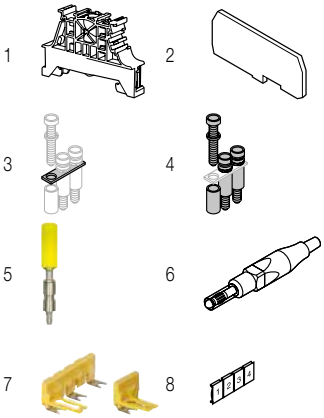

	Description			Color	Type	Part Number		Pkg pce	Weight (1 pce) g
1	**End stops**	End stops	0.394 in	Dark grey	BAM4	1SNK900001R0000		50	14.00
			0.205 in		BAZ1	1SNK900002R0000		50	5.30
2	**End sections**	1 mm	0.039 in	Grey	FEM8T6	1SNA215266R0100		10	4.40
3	**Jumper bars**	2 poles	41 A		BJS8	1SNA164581R1300		10	3.10
		3 poles				1SNA164582R1400		10	3.10
		4 poles				1SNA164583R1500		10	3.10
		20 poles			BJS8-20	1SNA174789R0500		5	3.20
4	**Fastening kits**	Sub assembly post + screw + washer			EV6I	1SNA206394R0200		20	2.00
5	**Test sockets**	DIA 4 mm 0.157 in IP20		Yellow	AJS9	1SNA179726R0200		25	3.60
				Black	AJS9-1	1SNA206680R1500		25	3.60
				Green	AJS9-2	1SNA206681R0200		25	3.60
				Grey	AJS9-3	1SNA206682R0300		25	3.60
				Blue	AJS9-4	1SNA206683R0400		25	3.60
				Red	AJS9-5	1SNA206720R1400		25	3.60
		DIA 4 mm 0.157 in			AL4-M3	1SNA206721R0100		50	1.10
6	**Test plugs**	DIA 4 mm 0.157 in IP20		Red	FC4-1	1SNA167927R1000		10	11.00
7	**Short circuit bridges**	2 poles		Yellow	SC-JB8-2	1SNK900652R0000		25	2.00
		3 poles			SC-JB8-3	1SNK900653R0000		25	3.40
		4 poles			SC-JB8-4	1SNK900654R0000		25	4.70
8	**Terminal block markers**	Blank card		White	RC810	1SNA234000R0200		1	8.20

Complete list of accessories is indicated in the terminal block datasheet.
Some accessories such as jumper bars may modify the terminal block's ratings: complete information in the accessories catalogue pages.

Technical data valid for copper conductors only.

1SNC161153S0201_dupli - Rev. A

D6/8.ST.RS spring loaded screw clamp terminal blocks

Test disconnect with a screwdriver sliding link - 8 mm 0.315 in spacing

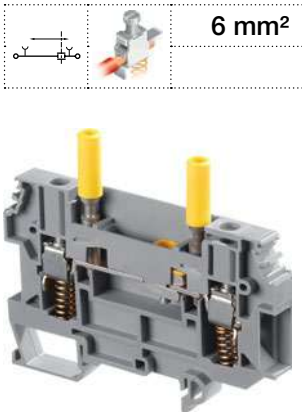

6 mm²

1SNC161233F0014

D6/8.ST.RS

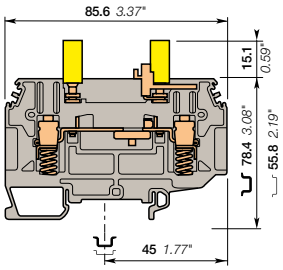

8 mm 0.315 in spacing

Description

- Mainly dedicated to energy markets for security purposes on CT circuits,
- Security: specific shape in linking bar to lock the ferrule, spring clamp can maintain contact pressure even if screw clamp is loose.

Ordering details

Description		Color	Type	Part Number		Pkg pce	Weight (1 pce) g
Disconnect	With 2 yellow test sockets DIA 4 mm 0.157 in	Grey	D6/8.ST1.RS.IP20	1SNA115831R0400		32	38.00

Main technical data

		IEC	BS TS 5018	CSA
1 conductor per clamp	Rigid: Solid/Stranded	0.5-10 mm²		
	Flexible without ferrule	0.5-6 mm²		
	Flexible with insulated ferrule		0.28-2.5 mm²	
	Gauge	A5		
Rated current / Rated cross section		24 A / 6 mm²		
Rated short-time withstand current (1s)		720 A		
Rated voltage		400 V		
Impulse withstand voltage		6000 V		
Protection			NEMA	

Mounting instructions

Rail		G32, TH 35-7.5, TH 35-15
Wire stripping length		16 mm 0.51 in
Screw clamp		Flat screwdriver
Tool		Ø 3.5 mm Ø 0.138 in
Torque		0.8 - 1 Nm 7.1 - 8.9 lb.in
Disconnect device		Flat screwdriver
Tool		Ø 3.5 mm Ø 0.138 in
Torque		0.4 - 0.6 N.m 3.5 - 5.3 lb.in
Test socket		
Tool		Ø 3.5 mm Ø 0.138 in
Torque		0.6 N.m 5.34 lb.in

The connecting capacity data for one Rigid: Solid/Stranded, or one Flexible conductor (when applicable) is a mandatory information required by IEC, UL and CSA standards (Copper conductors). All other data are provided as supplementary information only. For more details, please consult our CB, UL or CSA certificates and technical datasheet available on http://www.TE.com

CE RoHS Gost R

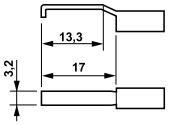

Each screw clamp holds up to 2 hook type ferrules as shown (not supplied)

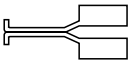

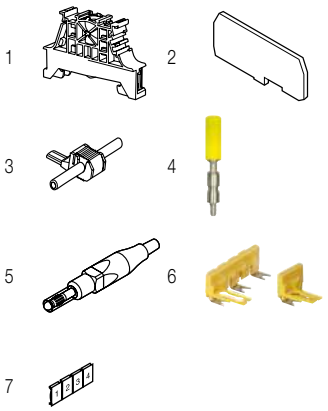

Accessories

	Description			Color	Type	Part Number		Pkg pce	Weight (1 pce) g
1	**End stops**	10 mm	0.394 in	Dark grey	BAM4	1SNK900001R0000		50	14.00
		5.2 mm	0.205 in		BAZ1	1SNK900002R0000		50	5.30
2	**End sections**	1 mm	0.039 in	Grey	FEM8T6	1SNA215266R0100		10	4.40
3	**Jumper bars**	1 poles	24 A	Grey	AD2.5	1SNA114205R2000		50	1.60
4	**Test sockets**	DIA 4 mm 0.157 in IP20		Black	AJS9-1	1SNA206680R1500		25	3.60
				Green	AJS9-2	1SNA206681R0200		25	3.60
				Grey	AJS9-3	1SNA206682R0300		25	3.60
				Blue	AJS9-4	1SNA206683R0400		25	3.60
				Red	AJS9-5	1SNA206720R1400		25	3.60
5	**Test plugs**	DIA 4 mm 0.157 in IP20		Red	FC4-1	1SNA167927R1000		10	11.00
6	**Short circuit bridges**	2 poles		Yellow	SC-JB8-2	1SNK900652R0000		25	2.00
		3 poles			SC-JB8-3	1SNK900653R0000		25	3.40
		4 poles			SC-JB8-4	1SNK900654R0000		25	4.70
7	**Terminal block markers**	Blank card		White	RC810	1SNA234000R0200		1	8.20

Complete list of accessories is indicated in the terminal block datasheet.
Some accessories such as jumper bars may modify the terminal block's ratings: complete information in the accessories catalogue pages.

Technical data valid for copper conductors only.

1SNC161095S0201_dupli - Rev. A

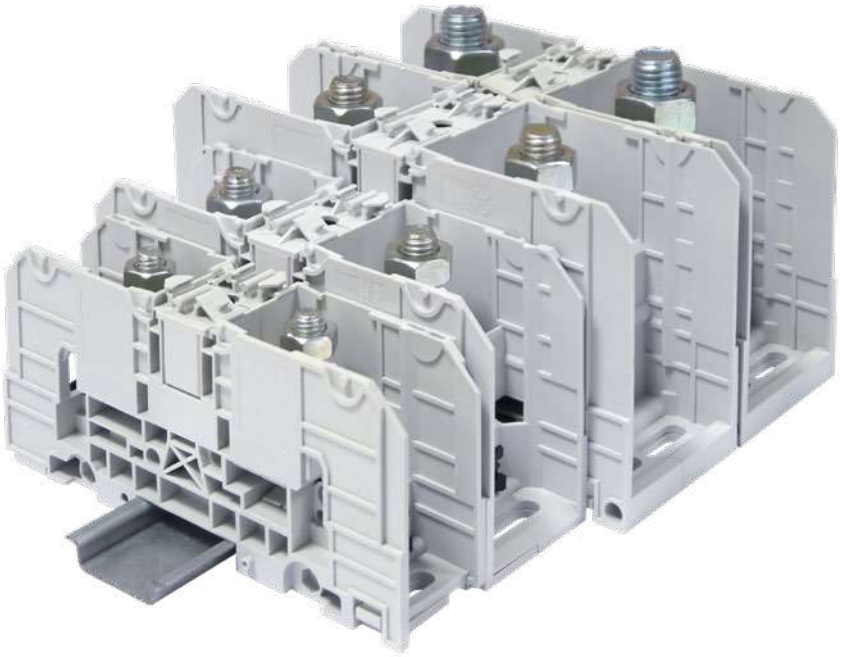

1SNC165030S0201

Dedicated applications terminal blocks
Stud technology

Technologies presentation 72
Overview 73

D… series

Two studs
Feed-through

35 mm² / 1 AWG	**D35/27.FF**	74
70 mm² / 000 AWG	**D70/32.FF**	75
120 mm² / 300 Kcmil	**D120/42.FF**	76
185 mm² / 500 Kcmil	**D185/55.FF**	77
300 mm² / 1000 Kcmil	**D300/55.FF**	78

One stud - One screw clamp
Feed-through

35 mm² / 1 AWG	**D35/27.AF**	79
70 mm² / 000 AWG	**D70/32.AF**	80
120 mm² / 300 AWG	**D120/42.AF**	81
185 mm² / 500 AWG	**D185/55.AF**	82

D… series mounting instructions 83

M… series

Two studs
Feed-through

25 mm² / 2 AWG	**M35/26.FF**	84
50 mm² / 00 AWG	**M70/31.FF**	85
70 mm² / 000 AWG-250 Kcmil	**M120/35.FF**	86
120 mm² / 500 Kcmil	**M300/42.FF**	87

One stud - One screw clamp
Feed-through

25 mm² / 2 AWG	**M35/26.AF**	88
50 mm² / 0 AWG	**M70/31.AF**	89
70 mm² / 000 AWG-250 Kcmil	**M120/35.AF**	90
120 mm² / 500 Kcmil	**M300/42.AF**	91

One stud
Feed-through

25 mm² / 2 AWG	**M35/26.F**	92
50 mm² / 00 AWG	**M70/31.F**	93
70 mm² / 000 AWG-250 Kcmil	**M120/35.F**	94
120 mm² / 500 Kcmil	**M300/42.F**	95

M… series mounting instructions 96

4

1SNC165030S0201

TE Connectivity Stud technology
The connection for power and energy circuits

Reliability first
Stud technology is designed to ensure a reliable connection thanks to the combination of:
- Vibration resistant equipements (nuts, washers),
- Lugs crimped on the cable provide pull-out proof termination.

This technology is very popular on the American market and particularely in the energy applications.

Available configurations

Two studs

One screw clamp / one stud

One stud

Connection technics

Up to 300 mm² / 1000 Kcmil

M4-M5	M6	M8	M10	M12	M16
6 mm²	**35 mm²**	**70 mm²**	**120 mm²**	**185 mm²**	**300 mm²**
8 AWG	1 AWG	000 AWG	300 Kcmil	500 Kcmil	1000 Kcmil

1SNC165028S0201

Two studs

Feed-through

Section

IEC	UL/CSA		
35 mm²	1 AWG	D35/27.FF	27 mm 1.063 in
70 mm²	000 AWG	D70/32.FF	32 mm 1.260 in
120 mm²	300 Kcmil	D120/42.FF	42 mm 1.654 in
185 mm²	500 Kcmil	D185/55.FF	55 mm 2.165 in
300 mm²	1000 Kcmil	D300/55.FF	55 mm 2.165 in

Feed-through

Section

IEC	UL/CSA		
25 mm²	2/4 AWG	M35/26.FF	26 mm 1.024 in
50 mm²	00/0 AWG	M70/31.FF	31 mm 1.220 in
70 mm²	250 Kcmil/000 AWG	M120/35.FF	35 mm 1.380 in
120 mm²	500 Kcmil	M300/42.FF	42 mm 1.653 in

One stud - One Screw-clamp

Feed-through

Section

IEC	UL/CSA		
35 mm²	1 AWG	D35/27.AF	27 mm 1.063 in
70 mm²	000 AWG	D70/32.AF	32 mm 1.260 in
120 mm²	300 Kcmil	D120/42.AF	42 mm 1.654 in
185 mm²	500 Kcmil	D185/55.AF	55 mm 2.165 in

Feed-through

Section

IEC	UL/CSA		
25 mm²	2/4 AWG	M35/26.AF	26 mm 1.024 in
50 mm²	0 AWG	M70/31.AF	31 mm 1.220 in
70 mm²	250 Kcmil/000 AWG	M120/35.AF	35 mm 1.380 in
120 mm²	500 Kcmil	M300/42.AF	42 mm 1.653 in

One stud

Feed-through

Section

IEC	UL/CSA		
25 mm²	2/4 AWG	M35/26.F	26 mm 1.024 in
50 mm²	00/0 AWG	M70/31.F	31 mm 1.220 in
70 mm²	250 Kcmil/000 AWG	M120/35.F	35 mm 1.380 in
120 mm²	500 Kcmil	M300/42.F	42 mm 1.653 in

1SNC165029S0201

D35/27.FF power terminal blocks
Feed-through - 27 mm 1.062 in spacing

35 mm²
1 AWG

D35/27.FF

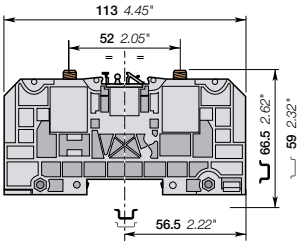

27 mm 1.062 in spacing

Description

- Rated cross section up to 300 mm² / 1000 Kcmil, IP20 protection cover,
- Holding foot on DIN 3 rail with two position for easy mounting, lug mounting in accordance with NF C 20-130 and DIN 46234, various marking options, rail or base mounting.

Ordering details

Description		Color	Type	Part Number		Pkg qty	Weight (1 pce) g
Feed-through	2 studs M6 without cover	Grey	D35/27.FF	1SNA190001R2000		10	130.00

Main technical data

Connecting capacity		NF C	DIN	UL	CSA
Lugs	Rigid: Solid/Stranded	2.5-35 mm²	2.5-50 mm²	1 AWG	
	Flexible with insulated ferrule	2.5-35 mm²	2.5-35 mm²		
	Gauge	C4			

		IEC	UL	CSA
Screw clamp	Rigid: Solid/Stranded			
	Flexible without ferrule			
	Gauge			

	IEC	UL	CSA
Bar			
Rated current	125 A	125 A	
Rated cross section	35 mm²	1 AWG	
Rated voltage	1000 V	600 V	
Impulse withstand voltage	8000 V		

Mounting instructions

Rail		TH 35-7.5, TH 35-15
Lugs Tool		Wrench H10 mm
Torque		3 - 6 N.m 26.1 - 52 lb.in
Jumper screw Tool		Allen key 6 mm 0.236 in
Torque		6 - 12 N.m 52 - 104 lb.in
Screw clamp Tool		
Torque		
Wire stripping length		

The connecting capacity data for one Rigid: Solid/Stranded, or one Flexible conductor (when applicable) is a mandatory information required by IEC, UL and CSA standards (Copper conductors). All other data are provided as supplementary information only. For more details, please consult our CB, UL or CSA certificates and technical datasheet available on http://www.TE.com

RoHS RoHS · USR CNR · Gost R

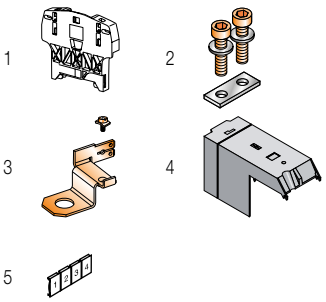

Accessories

	Description			Color	Type	Part Number		Pkg qty	Weight (1 pce) g
1	**End stops**	10 mm	0.394 in	Dark grey	BAZH1	1SNK900102R0000		20	24.00
2	**Jumper bars**	2 poles			BJS27-2	1SNA205772R1300		5	34.00
		3 poles			BJS27-3	1SNA205773R1400		5	52.00
3	**Splitters**	For 6.35x0.8mm faston clips and screws			DRF6	1SNA205767R1600		10	4.00
4	**Protecting covers**	IP20 rotating protecting cover		Grey	CPUF35	1SNA190016R1600		2	8.30
5	**Terminal block markers**	Blank card		White	RC810	1SNA234000R0200		1	8.20

Complete list of accessories is indicated in the terminal block datasheet.
Some accessories such as jumper bars may modify the terminal block's ratings: complete information in the accessories catalogue pages.

Technical data valid for copper conductors only.

1SNC165006S0201 - Rev. C

D70/32.FF power terminal blocks
Feed-through - 32 mm 1.260 in spacing

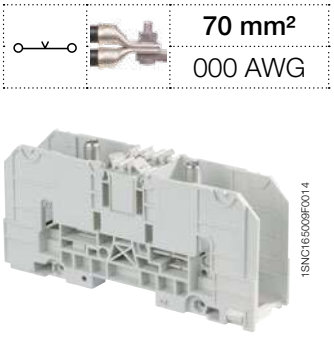

70 mm²	
000 AWG	

D70/32.FF

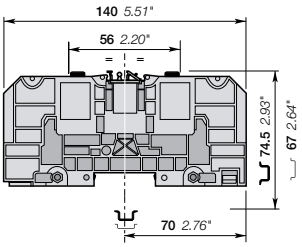

32 mm 1.260 in spacing

Description

- Rated cross section up to 300 mm² / 1000 Kcmil, IP20 protection cover,
- Holding foot on DIN 3 rail with two position for easy mounting, lug mounting in accordance with NF C 20-130 and DIN 46234, various marking options, rail or base mounting.

Ordering details

Description		Color	Type	Part Number		Pkg qty	Weight (1 pce) g
Feed-through	2 studs M8 without cover	Grey	D70/32.FF	1SNA190002R2100		3	269.00

Main technical data

Connecting capacity		NF C	DIN	UL	CSA
Lugs	Rigid: Solid/Stranded	6-95 mm²	6-70 mm²	000 AWG	
	Flexible with insulated ferrule	6-70 mm²	6-70 mm²		
	Gauge	C6			

		IEC	UL	CSA
Screw clamp	Rigid: Solid/Stranded			
	Flexible without ferrule			
	Gauge			

	IEC	UL	CSA
Bar			
Rated current	192 A	170 A	
Rated cross section	70 mm²	000 AWG	
Rated voltage	1000 V	600 V	
Impulse withstand voltage	8000 V		

Mounting instructions

Rail		TH 35-7.5, TH 35-15
Lugs Tool		Wrench H13 mm
Torque		6 - 12 N.m 52 - 104 lb.in
Jumper screw Tool		Allen key 6 mm 0.236 in
Torque		6 - 12 N.m 52 - 104 lb.in
Screw clamp Tool		
Torque		
Wire stripping length		

The connecting capacity data for one Rigid: Solid/Stranded, or one Flexible conductor (when applicable) is a mandatory information required by IEC, UL and CSA standards (Copper conductors). All other data are provided as supplementary information only. For more details, please consult our CB, UL or CSA certificates and technical datasheet available on http://www.TE.com

RoHS RoHS | USR CNR | Gost R

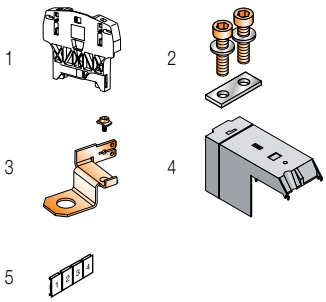

Accessories

	Description			Color	Type	Part Number		Pkg qty	Weight (1 pce) g
1	**End stops**	10 mm	0.394 in	Dark grey	BAZH1	1SNK900102R0000		20	24.00
2	**Jumper bars**	2 poles			BJS32-2	1SNA205774R1500		5	66.00
		3 poles			BJS32-3	1SNA205775R1600		5	105.80
3	**Splitters**	For 6.35x0.8mm faston clips and screws			DRF8	1SNA205768R2700		10	5.00
4	**Protecting covers**	IP20 rotating protecting cover		Grey	CPUF70	1SNA190017R1700		2	12.00
5	**Terminal block markers**	Blank card		White	RC810	1SNA234000R0200		1	8.20

Complete list of accessories is indicated in the terminal block datasheet.
Some accessories such as jumper bars may modify the terminal block's ratings: complete information in the accessories catalogue pages.

Technical data valid for copper conductors only.

1SNC165005S0201 - Rev. C

D120/42.FF power terminal blocks
Feed-through - 42 mm 1.653 in spacing

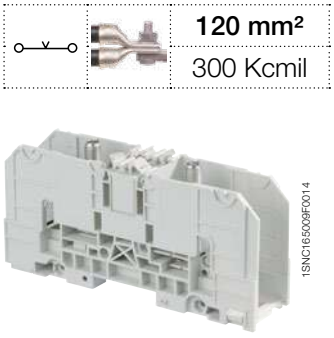

120 mm²
300 Kcmil

D120/42.FF

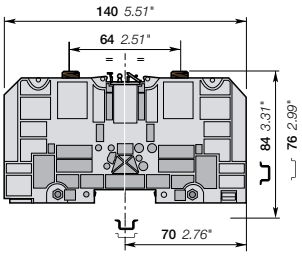

42 mm 1.653 in spacing

Description

- Rated cross section up to 300 mm² / 1000 Kcmil, IP20 protection cover,
- Holding foot on DIN 3 rail with two position for easy mounting, lug mounting in accordance with NF C 20-130 and DIN 46234, various marking options, rail or base mounting.

Ordering details

Description		Color	Type	Part Number		Pkg qty	Weight (1 pce) g
Feed-through	2 studs M10 without cover	Grey	D120/42.FF	1SNA190003R2200		1	423.00

Main technical data

Connecting capacity		NF C	DIN	UL	CSA
Lugs	Rigid: Solid/Stranded	6-150 mm²	6-120 mm²	300 Kcmil	
	Flexible with insulated ferrule	6-120 mm²			
	Gauge	C8			

		IEC	UL	CSA
Screw clamp	Rigid: Solid/Stranded			
	Flexible without ferrule			
	Gauge			

	IEC	UL	CSA
Bar			
Rated current	269 A	269 A	
Rated cross section	120 mm²	300 Kcmil	
Rated voltage	1000 V	600 V	
Impulse withstand voltage	8000 V		

Mounting instructions

Rail		TH 35-7.5, TH 35-15
Lugs Tool		Wrench H17 mm
Torque		10 - 20 N.m 87 - 174 lb.in
Jumper screw Tool		Allen key 6 mm 0.236 in
Torque		6 - 12 N.m 52 - 104 lb.in
Screw clamp Tool		
Torque		
Wire stripping length		

The connecting capacity data for one Rigid: Solid/Stranded, or one Flexible conductor (when applicable) is a mandatory information required by IEC, UL and CSA standards (Copper conductors). All other data are provided as supplementary information only. For more details, please consult our CB, UL or CSA certificates and technical datasheet available on http://www.TE.com

RoHS — USR CNR — Gost R

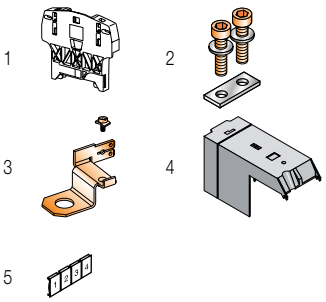

Accessories

	Description			Color	Type	Part Number		Pkg qty	Weight (1 pce) g
1	**End stops**	10 mm	0.394 in	Dark grey	BAZH1	1SNK900102R0000		20	24.00
2	**Jumper bars**	2 poles			BJS42-2	1SNA205776R1700		5	93.00
		3 poles			BJS42-3	1SNA205777R1000		5	153.00
3	**Splitters**	For 6.35x0.8mm faston clips and screws			DRF10	1SNA205769R2000		10	7.00
4	**Protecting covers**	IP20 rotating protecting cover		Grey	CPUF120	1SNA190018R2000		2	24.00
5	**Terminal block markers**	Blank card		White	RC810	1SNA234000R0200		1	8.20

Complete list of accessories is indicated in the terminal block datasheet.
Some accessories such as jumper bars may modify the terminal block's ratings: complete information in the accessories catalogue pages.

Technical data valid for copper conductors only.

1SNC165004S0201 - Rev. C

D185/55.FF power terminal blocks
Feed-through - 55 mm 2.165 in spacing

185 mm²
500 Kcmil

D185/55.FF

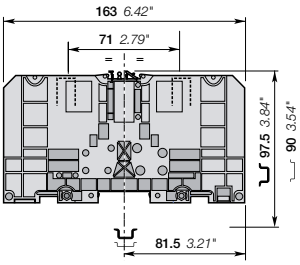

55 mm 2.165 in spacing

Description

- Rated cross section up to 300 mm² / 1000 Kcmil, IP20 protection cover,
- Holding foot on DIN 3 rail with two position for easy mounting, lug mounting in accordance with NF C 20-130 and DIN 46234, various marking options, rail or base mounting.

Ordering details

Description		Color	Type	Part Number		Pkg qty	Weight (1 pce) g
Feed-through	2 studs M12 without cover	Grey	D185/55.FF	1SNA190004R2300		1	615.00

Main technical data

Connecting capacity		NF C	DIN	UL	CSA
Lugs	Rigid: Solid/Stranded	25-240 mm²	6-185 mm²	500 Kcmil	
	Flexible with insulated ferrule	6-185 mm²			
	Gauge	C11			

		IEC	UL	CSA
Screw clamp	Rigid: Solid/Stranded			
	Flexible without ferrule			
	Gauge			

	IEC	UL	CSA
Bar			
Rated current	353 A	353 A	
Rated cross section	185 mm²	500 Kcmil	
Rated voltage	1000 V	600 V	
Impulse withstand voltage	8000 V		

Mounting instructions

Rail	TH 35-7.5, TH 35-15
Lugs Tool	Wrench H24 mm
Torque	14 - 30 N.m 123.9 - 265.5 lb.in
Jumper screw Tool	Allen key 6 mm 0.236 in
Torque	6 - 12 N.m 52 - 104 lb.in
Screw clamp Tool	
Torque	
Wire stripping length	

The connecting capacity data for one Rigid: Solid/Stranded, or one Flexible conductor (when applicable) is a mandatory information required by IEC, UL and CSA standards (Copper conductors). All other data are provided as supplementary information only. For more details, please consult our CB, UL or CSA certificates and technical datasheet available on http://www.TE.com

RoHS USR CNR Gost R

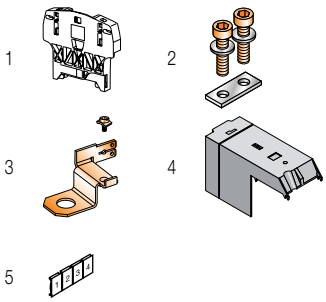

Accessories

	Description			Color	Type	Part Number		Pkg qty	Weight (1 pce) g
1	**End stops**	10 mm	0.394 in	Dark grey	BAZH1	1SNK900102R0000		20	24.00
2	**Jumper bars**	2 poles			BJS551-2	1SNA205778R2100		5	158.00
		3 poles			BJS551-3	1SNA205779R2200		5	266.00
3	**Splitters**	For 6.35x0.8mm faston clips and screws			DRF12	1SNA205770R2500		10	8.00
4	**Protecting covers**	IP20 rotating protecting cover		Grey	CPUF185	1SNA190019R2100		2	40.00
5	**Terminal block markers**	Blank card		White	RC810	1SNA234000R0200		1	8.20

Complete list of accessories is indicated in the terminal block datasheet.
Some accessories such as jumper bars may modify the terminal block's ratings: complete information in the accessories catalogue pages.

Technical data valid for copper conductors only.

1SNC165010S0201 - Rev. C

D300/55.FF power terminal blocks
Feed-through - 55 mm 2.165 in spacing

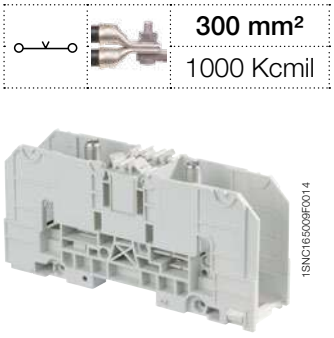

D300/55.FF

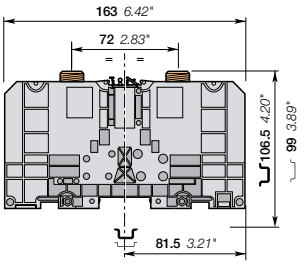

55 mm 2.165 in spacing

	300 mm²
	1000 Kcmil

Description

- Rated cross section up to 300 mm² / 1000 Kcmil, IP20 protection cover,
- Holding foot on DIN 3 rail with two position for easy mounting, lug mounting in accordance with NF C 20-130 and DIN 46234, various marking options, rail or base mounting.

Ordering details

Description		Color	Type	Part Number		Pkg qty	Weight (1 pce) g
Feed-through	2 studs M16 without cover	Grey	D300/55.FF	1SNA190005R2400		1	775.00

Main technical data

Connecting capacity		NF C	DIN	UL	CSA
Lugs	Rigid: Solid/Stranded	25-300 mm²	6-300 mm²	1000 Kcmil	
	Flexible with insulated ferrule	6-300 mm²			
	Gauge				

		IEC	UL	CSA
Screw clamp	Rigid: Solid/Stranded			
	Flexible without ferrule			
	Gauge			

	IEC	UL	CSA
Bar			
Rated current	520 A	460 A	
Rated cross section	300 mm²	1000 Kcmil	
Rated voltage	1000 V	600 V	
Impulse withstand voltage	8000 V		

Mounting instructions

Rail	TH 35-7.5, TH 35-15
Lugs Tool	Wrench H24 mm
Torque	25 - 50 N.m 217 - 435 lb.in
Jumper screw Tool	Allen key 6 mm 0.236 in
Torque	6 - 12 N.m 52 - 104 lb.in
Screw clamp Tool	
Torque	
Wire stripping length	

The connecting capacity data for one Rigid: Solid/Stranded, or one Flexible conductor (when applicable) is a mandatory information required by IEC, UL and CSA standards (Copper conductors). All other data are provided as supplementary information only. For more details, please consult our CB, UL or CSA certificates and technical datasheet available on http://www.TE.com

RoHS — USR CNR — Gost R

Accessories

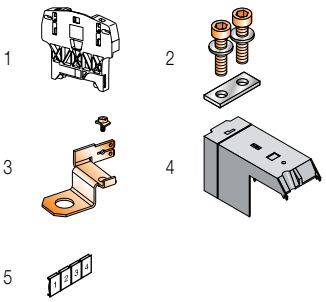

	Description			Color	Type	Part Number		Pkg qty	Weight (1 pce) g
1	**End stops**	10 mm	0.394 in	Dark grey	BAZH1	1SNK900102R0000		20	24.00
2	**Jumper bars**	2 poles			BJS551-2	1SNA205778R2100		5	158.00
		3 poles			BJS551-3	1SNA205779R2200		5	266.00
3	**Splitters**	For 6.35x0.8mm faston clips and screws			DRF16	1SNA205771R1200		10	7.00
4	**Protecting covers**	IP20 rotating protecting cover		Grey	CPUF185	1SNA190019R2100		2	40.00
5	**Terminal block markers**	Blank card		White	RC810	1SNA234000R0200		1	8.20

Complete list of accessories is indicated in the terminal block datasheet.
Some accessories such as jumper bars may modify the terminal block's ratings: complete information in the accessories catalogue pages.

Technical data valid for copper conductors only.

1SNC165011S0201 - Rev. C

D35/27.AF power terminal blocks
Feed-through - 27 mm 1.062 in spacing

35 mm²
1 AWG

D35/27.AF

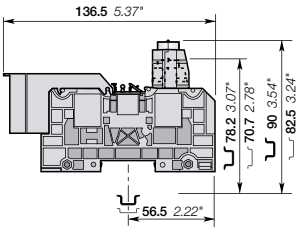

27 mm 1.062 in spacing

Description

- Rated cross section up to 240 mm² / 500 Kcmil, IP20 protection cover,
- Holding foot on DIN 3 rail with two position for easy mounting, lug mounting in accordance with NF C 20-130 and DIN 46234, various marking options, rail or base mounting.

Ordering details

Description		Color	Type	Part Numbers		Pkg qty	Weight (1 pce) g
Feed-through	1 stud M6 + 1 screw clamp with covers	Grey	D35/27.AF	1SNA190006R2500		10	149.00

Main technical data

Connecting capacity		NFC	DIN	UL	CSA
Lugs	Rigid: Solid/Stranded	2.5-35 mm²	2.5-50 mm²	1 AWG	
	Flexible with insulated ferrule	2.5-35 mm²	2.5-35 mm²		
	Gauge	C4			

		IEC	UL	CSA
Screw clamp	Rigid: Solid/Stranded	2.5-35 mm²	1-12 AWG	
	Flexible without ferrule	2.5-35 mm²		
	Gauge			

	IEC	UL	CSA
Bar			
Rated current	125 A	130 A	
Rated cross section	35 mm²	1 AWG	
Rated voltage	1000 V	600 V	
Impulse withstand voltage	8000 V		

Mounting instructions

Rail		TH 35-7.5, TH 35-15
Lugs Tool		Wrench H10 mm
Torque		3 - 6 N.m 26.1 - 52 lb.in
Jumper screw Tool		Allen key 6 mm 0.236 in
Torque		6 - 12 N.m 52 - 104 lb.in
Screw clamp Tool		Allen key 5 mm 0.197 in
Torque		3.5 ± 0.5 N.m 30.9 ± 4.43 lb.in
Wire stripping length		28 mm 1.102 in

The connecting capacity data for one Rigid: Solid/Stranded, or one Flexible conductor (when applicable) is a mandatory information required by IEC, UL and CSA standards (Copper conductors). All other data are provided as supplementary information only. For more details, please consult our CB, UL or CSA certificates and technical datasheet available on http://www.TE.com

RoHS USR CNR Gost R

Accessories

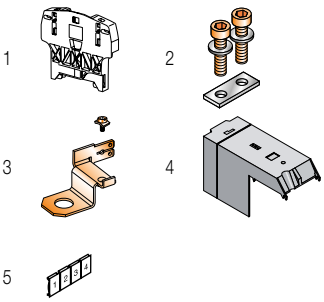

	Description			Color	Type	Part Numbers		Pkg qty	Weight (1 pce) g
1	**End stops**	10 mm	0.394 in	Dark grey	BAZH1	1SNK900102R0000		20	24.00
2	**Jumper bars**	2 poles			BJS27-2	1SNA205772R1300		5	34.00
		3 poles			BJS27-3	1SNA205773R1400		5	52.00
3	**Splitters**	For 6.35x0.8mm faston clips and screws			DRF6	1SNA205767R1600		10	4.00
4	**Protecting covers**	IP20 rotating protecting cover		Grey	CPUF35	1SNA190016R1600		2	8.30
5	**Terminal block markers**	Blank card		White	RC810	1SNA234000R0200		1	8.20

Complete list of accessories is indicated in the terminal block datasheet.
Some accessories such as jumper bars may modify the terminal block's ratings: complete information in the accessories catalogue pages.

Technical data valid for copper conductors only.

D70/32.AF power terminal blocks

Feed-through - 32 mm 1.260 in spacing

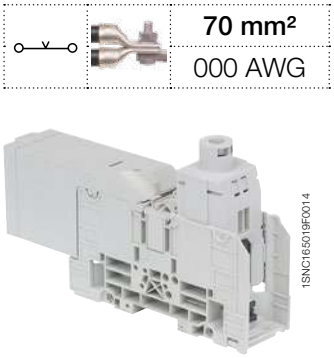

70 mm²	
000 AWG	

D70/32.AF

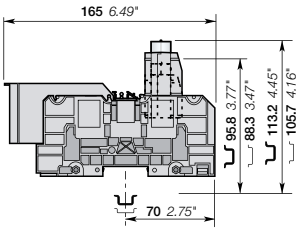

32 mm 1.260 in spacing

Description

- Rated cross section up to 240 mm² / 500 Kcmil, IP20 protection cover,
- Holding foot on DIN 3 rail with two position for easy mounting, lug mounting in accordance with NF C 20-130 and DIN 46234, various marking options, rail or base mounting.

Ordering details

Description		Color	Type	Part Numbers		Pkg qty	Weight (1 pce) g
Feed-through	1 stud M8 + 1 screw clamp with covers	Grey	D70/32.AF	1SNA190007R2600		3	269.00

Main technical data

Connecting capacity		NFC	DIN	UL	CSA
Lugs	Rigid: Solid/Stranded	6-95 mm²	6-70 mm²	000 AWG	
	Flexible with insulated ferrule	6-70 mm²	6-70 mm²		
	Gauge				

		IEC	UL	CSA
Screw clamp	Rigid: Solid/Stranded	6-95 mm²	10-000 AWG	
	Flexible without ferrule	6-70 mm²		
	Gauge			

	IEC	UL	CSA
Bar			
Rated current	192 A	165 A	
Rated cross section	70 mm²	000 AWG	
Rated voltage	1000 V	600 V	
Impulse withstand voltage	8000 V		

Mounting instructions

Rail	TH 35-7.5, TH 35-15
Lugs Tool	Wrench H13 mm
Torque	6 - 12 N.m 52 - 104 lb.in
Jumper screw Tool	Allen key 6 mm 0.236 in
Torque	6 - 12 N.m 52 - 104 lb.in
Screw clamp Tool	Wrench 6 mm 0.236 in
Torque	7 ±1 N.m 61.9 ± 8.85 lb.in
Wire stripping length	33 mm 1.299 in

The connecting capacity data for one Rigid: Solid/Stranded, or one Flexible conductor (when applicable) is a mandatory information required by IEC, UL and CSA standards (Copper conductors). All other data are provided as supplementary information only. For more details, please consult our CB, UL or CSA certificates and technical datasheet available on http://www.TE.com

RoHS RoHS USR CNR Gost R

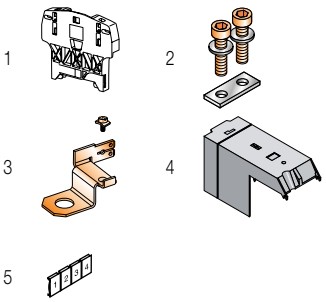

Accessories

	Description			Color	Type	Part Numbers		Pkg qty	Weight (1 pce) g
1	**End stops**	10 mm	0.394 in	Dark grey	BAZH1	1SNK900102R0000		20	24.00
2	**Jumper bars**	2 poles			BJS32-2	1SNA205774R1500		5	66.00
		3 poles			BJS32-3	1SNA205775R1600		5	105.80
3	**Splitters**	For 6.35x0.8mm faston clips and screws			DRF8	1SNA205768R2700		10	5.00
4	**Protecting covers**	IP20 rotating protecting cover		Grey	CPUF70	1SNA190017R1700		2	12.00
5	**Terminal block markers**	Blank card		White	RC810	1SNA234000R0200		1	8.20

Complete list of accessories is indicated in the terminal block datasheet.
Some accessories such as jumper bars may modify the terminal block's ratings: complete information in the accessories catalogue pages.

Technical data valid for copper conductors only.

1SNC165007S0201 - Rev. B

D120/42.AF power terminal blocks
Feed-through - 42 mm 1.653 in spacing

120 mm²
300 Kcmil

D120/42.AF

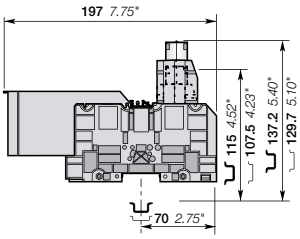

42 mm 1.653 in spacing

Description

- Rated cross section up to 240 mm² / 500 Kcmil, IP20 protection cover,
- Holding foot on DIN 3 rail with two position for easy mounting, lug mounting in accordance with NF C 20-130 and DIN 46234, various marking options, rail or base mounting.

Ordering details

Description		Color	Type	Part Numbers		Pkg qty	Weight (1 pce) g
Feed-through	1 stud M10 + 1 screw clamp with covers	Grey	D120/42.AF	1SNA190008R0700		1	423.00

Main technical data

Connecting capacity		NFC	DIN	UL	CSA
Lugs	Rigid: Solid/Stranded	6-150 mm²	6-120 mm²	300 Kcmil	
	Flexible with insulated ferrule	6-120 mm²			
	Gauge	C8			

		IEC	UL	CSA
Screw clamp	Rigid: Solid/Stranded	6-150 mm²	10 AWG-300 Kcmil	
	Flexible without ferrule	6-120 mm²		
	Gauge			

	IEC	UL	CSA
Bar			
Rated current	269 A	240 A	
Rated cross section	120 mm²	300 Kcmil	
Rated voltage	1000 V	600 V	
Impulse withstand voltage	8000 V		

Mounting instructions

Rail		TH 35-7.5, TH 35-15
Lugs Tool		Wrench H17 mm
Torque		10 - 20 N.m 87 - 174 lb.in
Jumper screw Tool		Allen key 6 mm 0.236 in
Torque		6 - 12 N.m 52 - 104 lb.in
Screw clamp Tool		Allen key 8 mm 0.315 in
Torque		11 ± 1 N.m 97.36 ± 8.85 lb.in
Wire stripping length		38 mm 1.496 in

The connecting capacity data for one Rigid: Solid/Stranded, or one Flexible conductor (when applicable) is a mandatory information required by IEC, UL and CSA standards (Copper conductors). All other data are provided as supplementary information only. For more details, please consult our CB, UL or CSA certificates and technical datasheet available on http://www.TE.com

RoHS — USR CNR — Gost R

Accessories

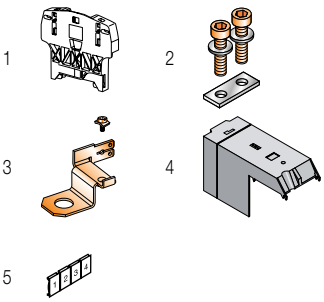

	Description			Color	Type	Part Numbers		Pkg qty	Weight (1 pce) g
1	**End stops**	10 mm	0.394 in	Dark grey	BAZH1	1SNK900102R0000		20	24.00
2	**Jumper bars**	2 poles			BJS42-2	1SNA205776R1700		5	93.00
		3 poles			BJS42-3	1SNA205777R1000		5	153.00
3	**Splitters**	For 6.35x0.8mm faston clips and screws			DRF10	1SNA205769R2000		10	7.00
4	**Protecting covers**	IP20 rotating protecting cover		Grey	CPUF120	1SNA190018R2000		2	24.00
5	**Terminal block markers**	Blank card		White	RC810	1SNA234000R0200		1	8.20

Complete list of accessories is indicated in the terminal block datasheet.
Some accessories such as jumper bars may modify the terminal block's ratings: complete information in the accessories catalogue pages.

Technical data valid for copper conductors only.

D185/55.AF power terminal blocks

Feed-through - 55 mm 2.165 in spacing

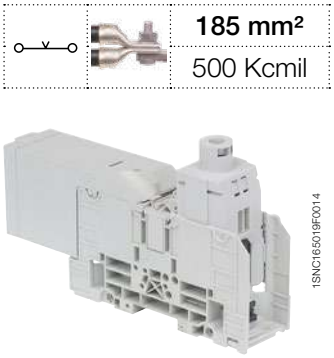

1SNC165019F0014

D185/55.AF

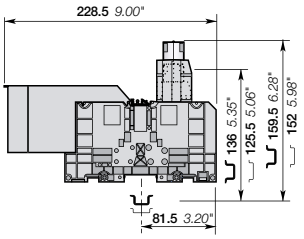

55 mm 2.165 in spacing

	185 mm²
	500 Kcmil

Description

- Rated cross section up to 240 mm² / 500 Kcmil, IP20 protection cover,
- Holding foot on DIN 3 rail with two position for easy mounting, lug mounting in accordance with NF C 20-130 and DIN 46234, various marking options, rail or base mounting.

Ordering details

Description		Color	Type	Part Numbers		Pkg qty	Weight (1 pce) g
Feed-through	1 stud M12 + 1 screw clamp with covers	Grey	D185/55.AF	1SNA190009R0000		1	937.00

Main technical data

Connecting capacity		NFC	DIN	UL	CSA
Lugs	Rigid: Solid/Stranded	25-240 mm²	6-185 mm²	500 Kcmil	
	Flexible with insulated ferrule	6-185 mm²			
	Gauge	C11			

		IEC	UL	CSA
Screw clamp	Rigid: Solid/Stranded	25-240 mm²	4 AWG-500 Kcmil	
	Flexible without ferrule	25-185 mm²		
	Gauge			

	IEC	UL	CSA
Bar			
Rated current	353 A	320 A	
Rated cross section	185 mm²	500 Kcmil	
Rated voltage	1000 V	600 V	
Impulse withstand voltage	8000 V		

Mounting instructions

Rail	TH 35-7.5, TH 35-15
Lugs Tool	Wrench H24 mm
Torque	14 - 30 N.m 123.9 - 265.5 lb.in
Jumper screw Tool	Allen key 6 mm 0.236 in
Torque	6 - 12 N.m 53.1 - 106.2 lb.in
Screw clamp Tool	Allen key 10 mm 0.394 in
Torque	15 ± 1 N.m 132.7 ± 8.85 lb.in
Wire stripping length	47 mm 1.850 in

The connecting capacity data for one Rigid: Solid/Stranded, or one Flexible conductor (when applicable) is a mandatory information required by IEC, UL and CSA standards (Copper conductors). All other data are provided as supplementary information only. For more details, please consult our CB, UL or CSA certificates and technical datasheet available on http://www.TE.com

RoHS RoHS · USR CNR · Gost R

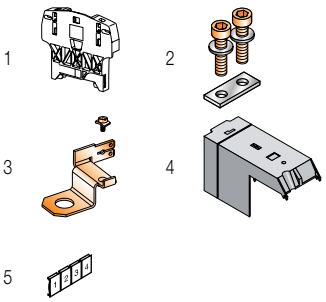

Accessories

	Description			Color	Type	Part Numbers		Pkg qty	Weight (1 pce) g
1	**End stops**	10 mm	0.394 in	Dark grey	BAZH1	1SNK900102R0000		20	24.00
2	**Jumper bars**	2 poles			BJS551-2	1SNA205778R2100		5	158.00
		3 poles			BJS551-3	1SNA205779R2200		5	266.00
3	**Splitters**	For 6.35x0.8mm faston clips and screws			DRF12	1SNA205770R2500		10	8.00
4	**Protecting covers**	IP20 rotating protecting cover		Grey	CPUF185	1SNA190019R2100		2	40.00
5	**Terminal block markers**	Blank card		White	RC810	1SNA234000R0200		1	8.20

Complete list of accessories is indicated in the terminal block datasheet.
Some accessories such as jumper bars may modify the terminal block's ratings: complete information in the accessories catalogue pages.

Technical data valid for copper conductors only.

1SNC165009S0201 - Rev. B

Main dimensions mm

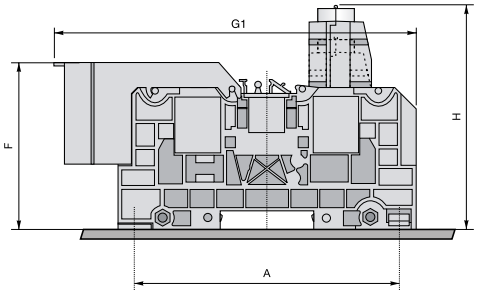

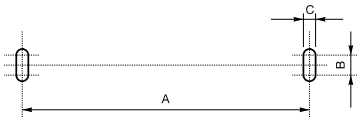

D 35/27.AF - D 70/32.AF - D 120/42.AF
D 35/27.FF - D 70/32.FF - D 120/42.FF

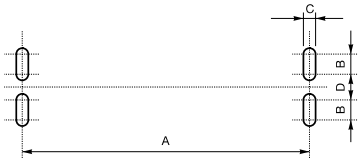

D 185/55.AF
D 185/55.FF - D 300/55.FF

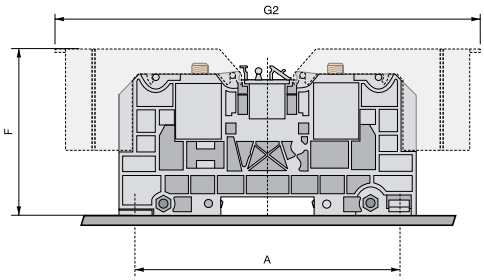

Type	Mounting with:	A	B	C	D	F	G1	G2	H
		Dimensions mm							
D35/27...	2 Screws	100.5	7.5	6.5	/	63.5	136.5	160	82.5
D70/32...	2 Screws	120	7.5	6.5	/	72.5	165	190.5	105.7
D120/42...	2 Screws	120	7.5	6.5	/	83.5	197	255.5	129.7
D185/55...	4 Screws	135	13.5	6.5	8.5	103.5	228.5	295	151.5
D300/55...	4 Screws	135	13.5	6.5	8.5	105	/	295	/

Marking

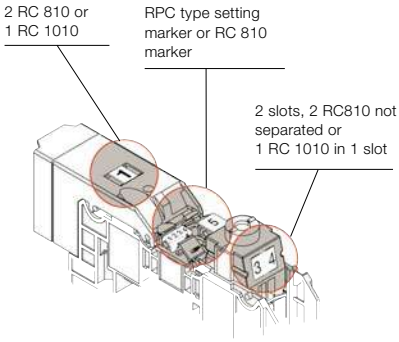

Jumper bar

- Move the marker holders up
- Cut out the partition
- Screw the jumper bar

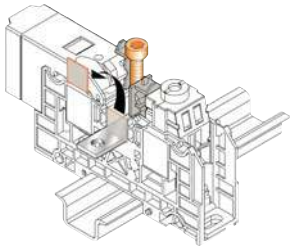

Locking foot operating with screwdriver DIA. 4 mm

Center opening (to be made after jumper bar has been removed) "monostable action".

As soon as the screwdriver is removed, the locking foot comes back to closed position

Side opening with
2 positions.
The locking foot remains
in open or closed position.

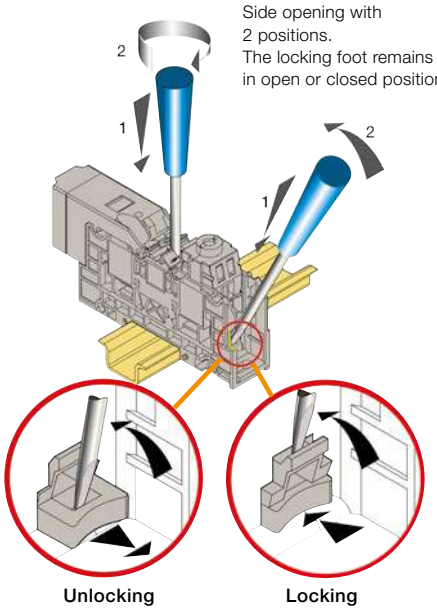

Locking

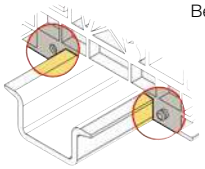

Between blocks with pins

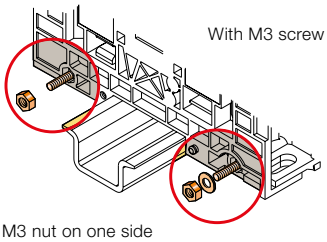

With M3 screw

M3 nut on one side
M3 nut + washer on the other side

Mounting of the derivative system

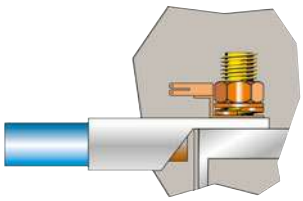

1SNC165014S0201

M35/26.FF stud terminal blocks

Feed-through - 26 mm 1.024 in spacing

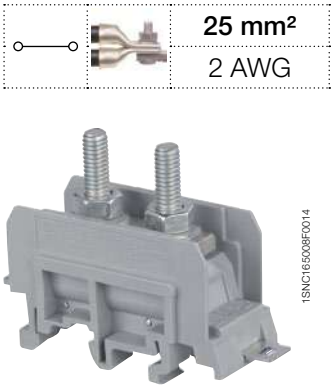

25 mm²
2 AWG

1SNC165008F0014

M35/26.FF

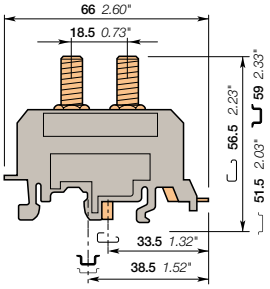

26 mm 1.024 in spacing

Description

- Compact two stud terminal block,
- Lug mounting in accordance with NF C 20-130 and DIN 46234,
- Various marking options,
- Rail or base mounting.

Ordering details

Description		Color	Type	Part Number		Pkg pce	Weight (1 pce) g
Feed-through	2 studs M6 linked by 1 removable bar 16 x 4 mm	Grey	M35/26.FF	1SNA115140R2300		10	64.00

Main technical data

		NFC	DIN	UL	CSA
Lugs	Rigid: Solid/Stranded	4-35 mm²	2.5-50 mm²	10-2 AWG	max 4 AWG
	Flexible with insulated ferrule	4-25 mm²	2.5-25 mm²		
	Gauge	C3			

		IEC	DIN	UL	CSA
Screw clamp	Rigid: Solid/Stranded				
	Flexible without ferrule				
	Gauge				

	IEC	DIN	UL	CSA
Bar	16 x 4 mm	0.63 x 0.16 in		
Rated current	101 A	125 A	115 A	125 A
Rated cross section	25 mm²	35 mm²	2 AWG	4 AWG
Rated voltage	1000 V		600 V	600 V
Impulse withstand voltage	8000 V			

Mounting instructions

Rail	G32, TH 35-7.5, TH 35-15
Lugs Tool	Wrench H10 mm
Torque	4.5-9 N.m 39.8-79.6 lb.in
Jumper screw Tool	
Torque	
Screw clamp Tool	
Torque	
Wire stripping length	

The connecting capacity data for one Rigid: Solid/Stranded, or one Flexible conductor (when applicable) is a mandatory information required by IEC, UL and CSA standards (Copper conductors). All other data are provided as supplementary information only. For more details, please consult our CB, UL or CSA certificates and technical datasheet available on http://www.TE.com

RoHS RoHS · USR · CSA · Gost R

Accessories

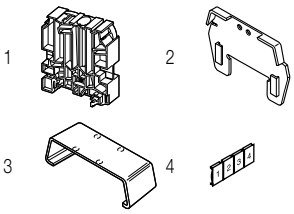

	Description			Color	Type	Part Number		Pkg pce	Weight (1 pce) g
1	**End stops**	9.1 mm	0.358 in	Grey	BAMH	1SNA114836R0000		50	13.00
		10 mm	0.394 in	Dark grey	BAZH1	1SNK900102R0000		20	24.00
2	**Circuit separators**	Circuit separators		Grey	ECP26	1SNA113689R2400		10	6.40
3	**Protecting covers**			Transparent	CPP261	1SNA168202R1300		5	5.00
		marked cut: 2 blocks			CPP262	1SNA168201R1200		5	10.00
		marked cut: 3 blocks			CPP263	1SNA163403R2000		5	17.00
4	**Terminal block markers**	Label holder		Grey	PEP	1SNA113762R2400		50	0.46
		Terminal block markers		White	RC610	1SNA233000R0100		1	7.50

Complete list of accessories is indicated in the terminal block datasheet.
Some accessories such as jumper bars may modify the terminal block's ratings: complete information in the accessories catalogue pages.

Technical data valid for copper conductors only.

1SNC165019S0201 - Rev. B

M70/31.FF stud terminal blocks

Feed-through - 31 mm 1.220 in spacing

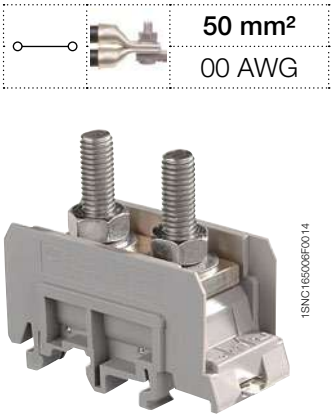

1SNC165006F0014

M70/31.FF

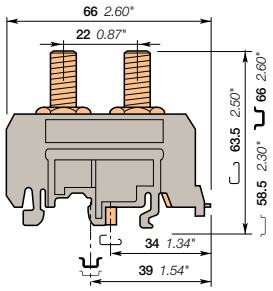

31 mm 1.220 in spacing

	50 mm²
	00 AWG

Description

- Compact two stud terminal block,
- Lug mounting in accordance with NF C 20-130 and DIN 46234,
- Various marking options,
- Rail or base mounting.

Ordering details

Description		Color	Type	Part Number		Pkg pce	Weight (1 pce) g
Feed-through	2 studs M8 linked by 1 removable bar 20 x 5 mm	Grey	M70/31.FF	1SNA115143R1200		10	110.00

Main technical data

		NFC	DIN	UL	CSA
Lugs	Rigid: Solid/Stranded	6-70 mm²	2.5-70 mm²	4-00 AWG	max 0 AWG
	Flexible with insulated ferrule	6-50 mm²	2.5-50 mm²		
	Gauge	C5			

		IEC	DIN	UL	CSA
Screw clamp	Rigid: Solid/Stranded				
	Flexible without ferrule				
	Gauge				

	IEC	DIN	UL	CSA
Bar	20 x 5 mm	0.78 x 0.20 in		
Rated current	150 A	178 A	175 A	200 A
Rated cross section	50 mm²	50 mm²	00 AWG	0 AWG
Rated voltage	1000 V		600 V	600 V
Impulse withstand voltage	8000 V			

Mounting instructions

Rail	G32, TH 35-7.5, TH 35-15
Lugs Tool	Wrench H13 mm
Torque	6-12 N.m 53.1-106.2 lb.in
Jumper screw Tool	
Torque	
Screw clamp Tool	
Torque	
Wire stripping length	

The connecting capacity data for one Rigid: Solid/Stranded, or one Flexible conductor (when applicable) is a mandatory information required by IEC, UL and CSA standards (Copper conductors). All other data are provided as supplementary information only. For more details, please consult our CB, UL or CSA certificates and technical datasheet available on http://www.TE.com

RoHS USR CSA Gost R

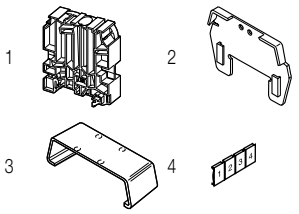

Accessories

	Description			Color	Type	Part Number		Pkg pce	Weight (1 pce) g
1	**End stops**	9.1 mm	0.358 in	Grey	BAMH	1SNA114836R0000		50	13.00
		10 mm	0.394 in	Dark grey	BAZH1	1SNK900102R0000		20	24.00
2	**Circuit separators**	Circuit separators		Grey	ECP31	1SNA113690R2100		10	6.70
3	**Protecting covers**			Transparent	CPP311	1SNA168204R1500		5	7.00
		marked cut: 2 blocks			CPP312	1SNA168203R1400		5	14.00
		marked cut: 3 blocks			CPP313	1SNA163409R0600		5	23.00
4	**Terminal block markers**	Label holder		Grey	PEP	1SNA113762R2400		50	0.46
		Terminal block markers		White	RC610	1SNA233000R0100		1	7.50

Complete list of accessories is indicated in the terminal block datasheet.
Some accessories such as jumper bars may modify the terminal block's ratings: complete information in the accessories catalogue pages.

Technical data valid for copper conductors only.

1SNC165020S0201 - Rev. B

M120/35.FF stud terminal blocks

Feed-through - 35 mm 1.380 in spacing

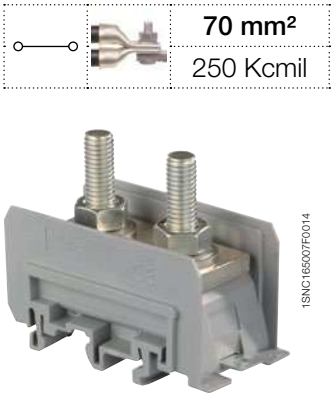

M120/35.FF

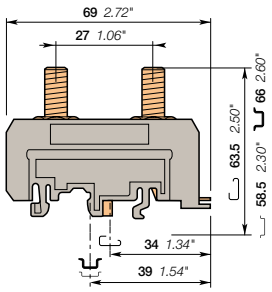

35 mm 1.380 in spacing

		70 mm²
		250 Kcmil

Description

- Compact two stud terminal block,
- Lug mounting in accordance with NF C 20-130 and DIN 46234,
- Various marking options,
- Rail or base mounting.

Ordering details

Description		Color	Type	Part Number		Pkg pce	Weight (1 pce) g
Feed-through	2 studs M8 linked by 1 removable bar 25 x 5 mm	Grey	M120/35.FF	1SNA115146R1500		10	130.00

Main technical data

		NFC	DIN	UL	CSA
Lugs	Rigid: Solid/Stranded	6-95 mm²	2.5-70 mm²	2-250 kcmil	max 000 AWG
	Flexible with insulated ferrule	6-70 mm²	2.5-70 mm²		
	Gauge	C6			

		IEC	DIN	UL	CSA
Screw clamp	Rigid: Solid/Stranded				
	Flexible without ferrule				
	Gauge				

	IEC	DIN	UL	CSA
Bar	25 x 5 mm	1 x 0.20 in		
Rated current	192 A	220 A	255 A	270 A
Rated cross section	70 mm²	70 mm²	250 Kcmil	000 AWG
Rated voltage	1000 V		600 V	600 V
Impulse withstand voltage	8000 V			

Mounting instructions

Rail		G32, TH 35-7.5, TH 35-15
Lugs Tool		Wrench H13 mm
Torque		6-12 N.m 53.1-106.2 lb.in
Jumper screw Tool		
Torque		
Screw clamp Tool		
Torque		
Wire stripping length		

The connecting capacity data for one Rigid: Solid/Stranded, or one Flexible conductor (when applicable) is a mandatory information required by IEC, UL and CSA standards (Copper conductors). All other data are provided as supplementary information only. For more details, please consult our CB, UL or CSA certificates and technical datasheet available on http://www.TE.com

RoHS RoHS | USR | CSA | Gost R

Accessories

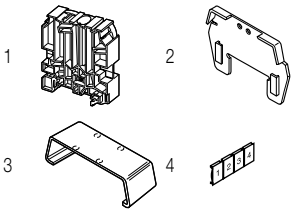

	Description			Color	Type	Part Number		Pkg pce	Weight (1 pce) g
1	**End stops**	9.1 mm	0.358 in	Grey	BAMH	1SNA114836R0000		50	13.00
		10 mm	0.394 in	Dark grey	BAZH1	1SNK900102R0000		20	24.00
2	**Circuit separators**	Circuit separators		Grey	ECP35	1SNA113691R1600		10	10.00
3	**Protecting covers**			Transparent	CPP351	1SNA168206R1700		5	8.00
		marked cut: 2 blocks			CPP352	1SNA168205R1600		5	20.00
		marked cut: 3 blocks			CPP353	1SNA163418R2600		5	20.00
4	**Terminal block markers**	Label holder		Grey	PEP	1SNA113762R2400		50	0.46
		Terminal block markers		White	RC610	1SNA233000R0100		1	7.50

Complete list of accessories is indicated in the terminal block datasheet.
Some accessories such as jumper bars may modify the terminal block's ratings: complete information in the accessories catalogue pages.

Technical data valid for copper conductors only.

1SNC165021S0201 - Rev. B

M300/42.FF stud terminal blocks
Feed-through - 42 mm 1.653 in spacing

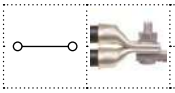

120 mm²
500 Kcmil

M300/42.FF

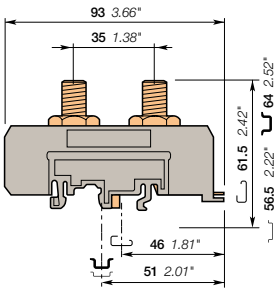

42 mm 1.653 in spacing

Description

- Compact two stud terminal block,
- Lug mounting in accordance with NF C 20-130 and DIN 46234,
- Various marking options,
- Rail or base mounting.

Ordering details

Description		Color	Type	Part Number		Pkg pce	Weight (1 pce) g
Feed-through	2 studs M10 linked by 1 removable bar 32 x 8 mm	Grey	M300/42.FF	1SNA115149R2000		10	220.00

Main technical data

		NFC	DIN	UL	CSA
Lugs	Rigid: Solid/Stranded	50-150 mm²	6-150 mm²	0-500 kcmil	max 500 Kcmil
	Flexible with insulated ferrule	50-120 mm²	6-120 mm²		
	Gauge	C8			

		IEC	DIN	UL	CSA
Screw clamp	Rigid: Solid/Stranded				
	Flexible without ferrule				
	Gauge				

	IEC	DIN	UL	CSA
Bar	32 x 8 mm	1.26 x 0.32 in		
Rated current	269 A	265 A	230 A	550 A
Rated cross section	120 mm²	120 mm²	500 Kcmil	500 Kcmil
Rated voltage	1000 V		600 V	600 V
Impulse withstand voltage	8000 V			

Mounting instructions

Rail	G32, TH 35-7.5, TH 35-15
Lugs Tool	Wrench H16 mm
Torque	10-20 N.m 88.5-177 lb.in
Jumper screw Tool	
Torque	
Screw clamp Tool	
Torque	
Wire stripping length	

The connecting capacity data for one Rigid: Solid/Stranded, or one Flexible conductor (when applicable) is a mandatory information required by IEC, UL and CSA standards (Copper conductors). All other data are provided as supplementary information only. For more details, please consult our CB, UL or CSA certificates and technical datasheet available on http://www.TE.com

RoHS RoHS · CSA · Gost R

Accessories

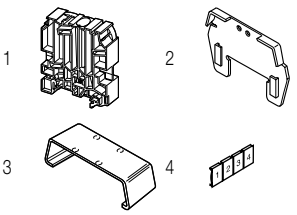

	Description			Color	Type	Part Number		Pkg pce	Weight (1 pce) g
1	**End stops**	9.1 mm	0.358 in	Grey	BAMH	1SNA114836R0000		50	13.00
		10 mm	0.394 in	Dark grey	BAZH1	1SNK900102R0000		20	24.00
2	**Circuit separators**	Circuit separators		Grey	ECP42	1SNA113692R1700		10	20.00
3	**Protecting covers**			Transparent	CPP421	1SNA168208R2100		5	13.00
		marked cut: 2 blocks			CPP422	1SNA168207R1000		5	30.00
		marked cut: 3 blocks			CPP423	1SNA163424R1400		5	40.00
4	**Terminal block markers**	Label holder		Grey	PEP	1SNA113762R2400		50	0.46
		Terminal block markers		White	RC610	1SNA233000R0100		1	7.50

Complete list of accessories is indicated in the terminal block datasheet.
Some accessories such as jumper bars may modify the terminal block's ratings: complete information in the accessories catalogue pages.

Technical data valid for copper conductors only.

M35/26.AF stud terminal blocks

Feed-through - 26 mm 1.024 in spacing

25 mm²

2 AWG

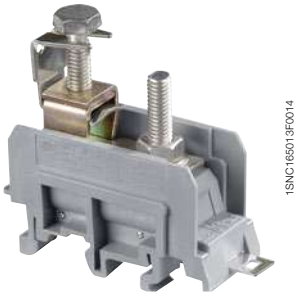

1SNC1650130F0014

M35/26.AF

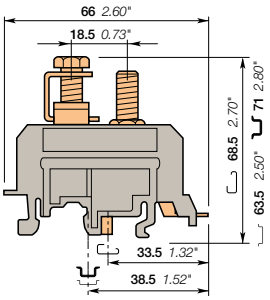

26 mm 1.024 in spacing

Description

- Compact one stud / one clamp terminal block,
- Lug mounting in accordance with NF C 20-130 and DIN 46234,
- Various marking options,
- Rail or base mounting.

Ordering details

Description		Color	Type	Part Number		Pkg pce	Weight (1 pce) g
Feed-through	1 stud M6 + 1 screw clamp	Grey	M35/26.AF	1SNA115139R1600		10	60.00

Main technical data

		NFC	DIN	UL	CSA
Lugs	Rigid: Solid/Stranded	4-35 mm²	2.5-50 mm²	10-2 AWG	10-4 AWG
	Flexible with insulated ferrule	4-25 mm²	2.5-25 mm²		
	Gauge	C3			

		IEC	DIN	UL	CSA
Screw clamp	Rigid: Solid/Stranded	6-50 mm²	6-50 mm²	14-2 AWG	10-4 AWG
	Flexible without ferrule	6-25 mm²			
	Gauge				

	IEC	DIN	UL	CSA
Bar				
Rated current	101 A	115 A	115 A	125 A
Rated cross section	25 mm²	25 mm²	2 AWG	4 AWG
Rated voltage	1000 V		600 V	600 V
Impulse withstand voltage	8000 V			

Mounting instructions

Rail		G32, TH 35-7.5, TH 35-15
Lugs Tool		Wrench H10 mm
Torque		4.5-9 N.m 39.8-79.6 lb.in
Jumper screw Tool		
Torque		
Screw clamp Tool		Wrench H10 mm
Torque		5 ± 0.5 N.m 44.25 ± 4.43 lb.in
Wire stripping length		19 mm 0.748 in

The connecting capacity data for one Rigid: Solid/Stranded, or one Flexible conductor (when applicable) is a mandatory information required by IEC, UL and CSA standards (Copper conductors). All other data are provided as supplementary information only. For more details, please consult our CB, UL or CSA certificates and technical datasheet available on http://www.TE.com

RoHS RoHS · USR · CSA · Gost R

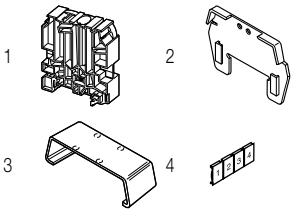

Accessories

	Description			Color	Type	Part Number		Pkg pce	Weight (1 pce) g
1	**End stops**	9.1 mm	0.358 in	Grey	BAMH	1SNA114836R0000		50	13.00
		10 mm	0.394 in	Dark grey	BAZH1	1SNK900102R0000		20	24.00
2	**Circuit separators**	Circuit separators		Grey	ECP26	1SNA113689R2400		10	6.40
3	**Protecting covers**			Transparent	CPP261	1SNA168202R1300		5	5.00
		marked cut: 2 blocks			CPP262	1SNA168201R1200		5	10.00
		marked cut: 3 blocks			CPP263	1SNA163403R2000		5	17.00
4	**Terminal block markers**	Label holder		Grey	PEP	1SNA113762R2400		50	0.46
		Terminal block markers		White	RC610	1SNA233000R0100		1	7.50

Complete list of accessories is indicated in the terminal block datasheet.
Some accessories such as jumper bars may modify the terminal block's ratings: complete information in the accessories catalogue pages.

Technical data valid for copper conductors only.

1SNC1650233S0201 - Rev. B

M70/31.AF stud terminal blocks
Feed-through - 31 mm 1.220 in spacing

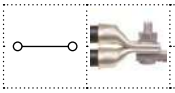

50 mm²	
0 AWG	

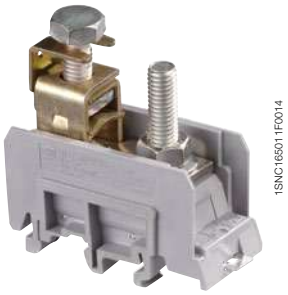

M70/31.AF

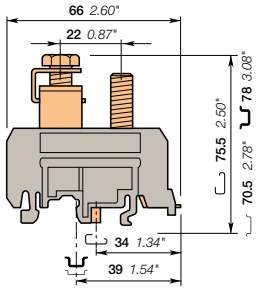

31 mm 1.220 in spacing

Description

- Compact one stud / one clamp terminal block,
- Lug mounting in accordance with NF C 20-130 and DIN 46234,
- Various marking options,
- Rail or base mounting.

Ordering details

Description		Color	Type	Part Number		Pkg pce	Weight (1 pce) g
Feed-through	1 stud M8 + 1 screw clamp	Grey	M70/31.AF	1SNA115142R1100		10	110.00

Main technical data

		NFC	DIN	UL	CSA
Lugs	Rigid: Solid/Stranded	6-70 mm²	2.5-70 mm²	8-0 AWG	6-0 AWG
	Flexible with insulated ferrule	6-50 mm²	2.5-50 mm²		
	Gauge	C5			

		IEC	DIN	UL	CSA
Screw clamp	Rigid: Solid/Stranded	6-70 mm²	6-70 mm²	8-0 AWG	6-0 AWG
	Flexible without ferrule	6-50 mm²			
	Gauge				

	IEC	DIN	UL	CSA
Bar				
Rated current	150 A	178 A	150 A	200 A
Rated cross section	50 mm²	50 mm²	0 AWG	0 AWG
Rated voltage	1000 V		600 V	600 V
Impulse withstand voltage	8000 V			

Mounting instructions

Rail		G32, TH 35-7.5, TH 35-15
Lugs Tool		Wrench H13 mm
Torque		6-12 N.m 53.1-106.2 lb.in
Jumper screw Tool		
Torque		
Screw clamp Tool		Wrench H13 mm
Torque		7 ± 1 N.m 61.9 ± 8.85 lb.in
Wire stripping length		22 mm 0.866 in

The connecting capacity data for one Rigid: Solid/Stranded, or one Flexible conductor (when applicable) is a mandatory information required by IEC, UL and CSA standards (Copper conductors). All other data are provided as supplementary information only. For more details, please consult our CB, UL or CSA certificates and technical datasheet available on http://www.TE.com

RoHS RoHS | USR | CSA | Gost R

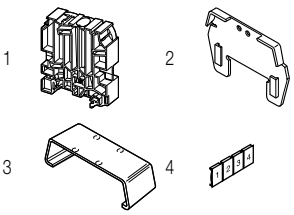

Accessories

	Description			Color	Type	Part Number		Pkg pce	Weight (1 pce) g
1	**End stops**	9.1 mm	0.358 in	Grey	BAMH	1SNA114836R0000		50	13.00
		10 mm	0.394 in	Dark grey	BAZH1	1SNK900102R0000		20	24.00
2	**Circuit separators**	Circuit separators		Grey	ECP31	1SNA113690R2100		10	6.70
3	**Protecting covers**			Transparent	CPP311	1SNA168204R1500		5	7.00
		marked cut: 2 blocks			CPP312	1SNA168203R1400		5	14.00
		marked cut: 3 blocks			CPP313	1SNA163409R0600		5	23.00
4	**Terminal block markers**	Label holder		Grey	PEP	1SNA113762R2400		50	0.46
		Terminal block markers		White	RC610	1SNA233000R0100		1	7.50

Complete list of accessories is indicated in the terminal block datasheet.
Some accessories such as jumper bars may modify the terminal block's ratings: complete information in the accessories catalogue pages.

Technical data valid for copper conductors only.

1SNC165024S0201 - Rev. B

M120/35.AF stud terminal blocks

Feed-through - 35 mm 1.380 in spacing

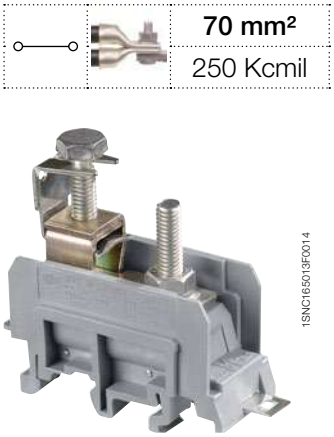

70 mm²
250 Kcmil

1SNC165013F0014

M120/35.AF

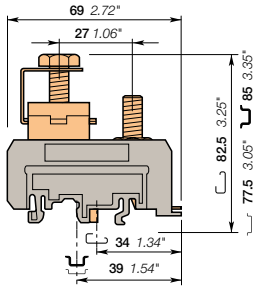

35 mm 1.380 in spacing

Description

- Compact one stud / one clamp terminal block,
- Lug mounting in accordance with NF C 20-130 and DIN 46234,
- Various marking options,
- Rail or base mounting.

Ordering details

Description		Color	Type	Part Number		Pkg pce	Weight (1 pce) g
Feed-through	1 stud M8 + 1 screw clamp	Grey	M120/35.AF	1SNA115145R1400		10	160.00

Main technical data

		NFC	DIN	UL	CSA
Lugs	Rigid: Solid/Stranded	6-95 mm²	2.5-70 mm²	2-250 Kcmil	max 000 AWG
	Flexible with insulated ferrule	6-70 mm²	2.5-70 mm²		
	Gauge	C6			

		IEC	DIN	UL	CSA
Screw clamp	Rigid: Solid/Stranded	35-120 mm²	35-120 mm²	2-250 Kcmil	2-000 AWG
	Flexible without ferrule	35-70 mm²	35-70 mm²		
	Gauge				

	IEC	DIN	UL	CSA
Bar				
Rated current	192 A	150 A	255 A	270 A
Rated cross section	70 mm²	50 mm²	250 Kcmil	000 AWG
Rated voltage	1000 V		600 V	600 V
Impulse withstand voltage	8000 V			

Mounting instructions

Rail		G32, TH 35-7.5, TH 35-15
Lugs Tool		Wrench H13 mm
Torque		6-12 N.m 53.1-106.2 lb.in
Tool		
Torque		
Screw clamp Tool		Wrench H13 mm
Torque		7 ± 1 N.m 61.9 ± 8.85 lb.in
Wire stripping length		28 mm 1.102 in

The connecting capacity data for one Rigid: Solid/Stranded, or one Flexible conductor (when applicable) is a mandatory information required by IEC, UL and CSA standards (Copper conductors). All other data are provided as supplementary information only. For more details, please consult our CB, UL or CSA certificates and technical datasheet available on http://www.TE.com

RoHS RoHS · USR · CSA · Gost R

Accessories

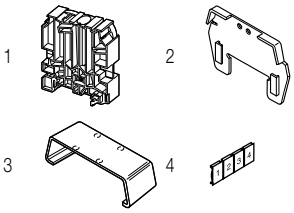

	Description			Color	Type	Part Number		Pkg pce	Weight (1 pce) g
1	**End stops**	9.1 mm	0.358 in	Grey	BAMH	1SNA114836R0000		50	13.00
		10 mm	0.394 in	Dark grey	BAZH1	1SNK900102R0000		20	24.00
2	**Circuit separators**	Circuit separators		Grey	ECP35	1SNA113691R1600		10	10.00
3	**Protecting covers**			Transparent	CPP351	1SNA168206R1700		5	8.00
		marked cut: 2 blocks			CPP352	1SNA168205R1600		5	20.00
		marked cut: 3 blocks			CPP353	1SNA163418R2600		5	20.00
4	**Terminal block markers**	Label holder		Grey	PEP	1SNA113762R2400		50	0.46
		Terminal block markers		White	RC610	1SNA233000R0100		1	7.50

Complete list of accessories is indicated in the terminal block datasheet.
Some accessories such as jumper bars may modify the terminal block's ratings: complete information in the accessories catalogue pages.

Technical data valid for copper conductors only.

M300/42.AF stud terminal blocks
Feed-through - 42 mm 1.653 in spacing

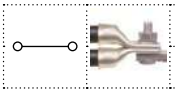

120 mm²
500 Kcmil

1SNC165013F0014

M300/42.AF

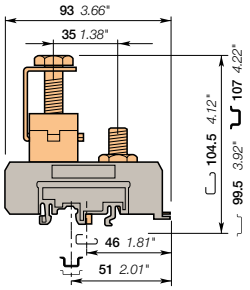

42 mm 1.653 in spacing

Description

- Compact one stud / one clamp terminal block,
- Lug mounting in accordance with NF C 20-130 and DIN 46234,
- Various marking options,
- Rail or base mounting.

Ordering details

Description		Color	Type	Part Number		Pkg pce	Weight (1 pce) g
Feed-through	1 stud M10 + 1 screw clamp	Grey	M300/42.AF	1SNA115148R2700		10	340.00

Main technical data

		NFC	DIN	UL	CSA
Lugs	Rigid: Solid/Stranded	50-150 mm²	6-150 mm²	0-500 Kcmil	0-500 Kcmil
	Flexible with insulated ferrule	50-120 mm²	6-120 mm²		
	Gauge	C8			

		IEC	DIN	UL	CSA
Screw clamp	Rigid: Solid/Stranded	70-300 mm²	70-300 mm²	0-500 Kcmil	0-500 Kcmil
	Flexible without ferrule	70-120 mm²	70-120 mm²		
	Gauge				

	IEC	DIN	UL	CSA
Bar				
Rated current	269 A	269 A	380 A	550 A
Rated cross section	120 mm²	120 mm²	500 Kcmil	500 Kcmil
Rated voltage	1000 V		600 V	600 V
Impulse withstand voltage	8000 V			

Mounting instructions

Rail		G32, TH 35-7.5, TH 35-15
Lugs Tool		Wrench H16 mm
Torque		10-20 N.m 88.5-177 lb.in
Jumper screw Tool		
Torque		
Screw clamp Tool		Wrench H16 mm
Torque		11 ± 1 N.m 97.36 ± 8.85 lb.in
Wire stripping length		40 mm 1.575 in

The connecting capacity data for one Rigid: Solid/Stranded, or one Flexible conductor (when applicable) is a mandatory information required by IEC, UL and CSA standards (Copper conductors). All other data are provided as supplementary information only. For more details, please consult our CB, UL or CSA certificates and technical datasheet available on http://www.TE.com

RoHS RoHS · USR · CSA · Gost R

Accessories

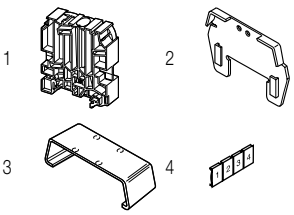

	Description			Color	Type	Part Number		Pkg pce	Weight (1 pce) g
1	**End stops**	9.1 mm	0.358 in	Grey	BAMH	1SNA114836R0000		50	13.00
		10 mm	0.394 in	Dark grey	BAZH1	1SNK900102R0000		20	24.00
2	**Circuit separators**	Circuit separators		Grey	ECP42	1SNA113692R1700		10	20.00
3	**Protecting covers**			Transparent	CPP421	1SNA168208R2100		5	13.00
		marked cut: 2 blocks			CPP422	1SNA168207R1000		5	30.00
		marked cut: 3 blocks			CPP423	1SNA163424R1400		5	40.00
4	**Terminal block markers**	Label holder		Grey	PEP	1SNA113762R2400		50	0.46
		Blank card		White	RC610	1SNA233000R0100		1	7.50

Complete list of accessories is indicated in the terminal block datasheet.
Some accessories such as jumper bars may modify the terminal block's ratings: complete information in the accessories catalogue pages.

Technical data valid for copper conductors only.

1SNC165026S0201 - Rev. B

M35/26.F stud terminal blocks

Feed-through - 26 mm 1.024 in spacing

25 mm²
2 AWG

M35/26.F

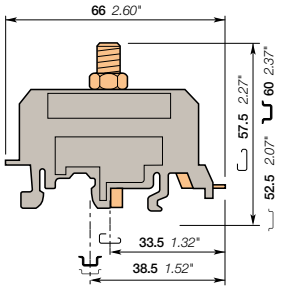

26 mm 1.024 in spacing

Description

- Compact one stud terminal block,
- Lug mounting in accordance with NF C 20-130 and DIN 46234,
- Various marking options,
- Rail or base mounting.

Ordering details

Description		Color	Type	Part Number		Pkg pce	Weight (1 pce) g
Feed-through	1 stud M6	Grey	M35/26.F	1SNA115141R1000		10	40.00

Main technical data

		NFC	DIN	UL	CSA
Lugs	Rigid: Solid/Stranded	4-35 mm²	2.5-50 mm²	10-2 AWG	max 4 AWG
	Flexible with insulated ferrule	4-25 mm²	2.5-25 mm²		
	Gauge	C3			

		IEC	DIN	UL	CSA
Screw clamp	Rigid: Solid/Stranded				
	Flexible without ferrule				
	Gauge				

	IEC	DIN	UL	CSA
Bar				
Rated current	101 A	125 A	115 A	125 A
Rated cross section	25 mm²	35 mm²	2 AWG	4 AWG
Rated voltage	1000 V		600 V	600 V
Impulse withstand voltage	8000 V			

Mounting instructions

Rail		G32, TH 35-7.5, TH 35-15
Lugs Tool		Wrench H10 mm
Torque		4.5-9 N.m 39.8-79.6 lb.in
Jumper screw Tool		
Torque		
Screw clamp Tool		
Torque		
Wire stripping length		

The connecting capacity data for one Rigid: Solid/Stranded, or one Flexible conductor (when applicable) is a mandatory information required by IEC, UL and CSA standards (Copper conductors). All other data are provided as supplementary information only. For more details, please consult our CB, UL or CSA certificates and technical datasheet available on http://www.TE.com

RoHS USR CSA Gost R

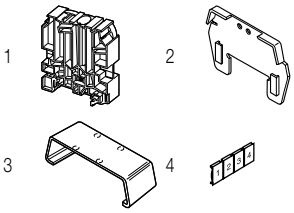

Accessories

	Description			Color	Type	Part Number		Pkg pce	Weight (1 pce) g
1	**End stops**	9.1 mm	0.358 in	Grey	BAMH	1SNA114836R0000		50	13.00
		10 mm	0.394 in	Dark grey	BAZH1	1SNK900102R0000		20	24.00
2	**Circuit separators**	Circuit separators		Grey	ECP26	1SNA113689R2400		10	6.40
3	**Protecting covers**			Transparent	CPP261	1SNA168202R1300		5	5.00
		marked cut: 2 blocks			CPP262	1SNA168201R1200		5	10.00
		marked cut: 3 blocks			CPP263	1SNA163403R2000		5	17.00
4	**Terminal block markers**	Label holder		Grey	PEP	1SNA113762R2400		50	0.46
		Terminal block markers		White	RC610	1SNA233000R0100		1	7.50

Complete list of accessories is indicated in the terminal block datasheet.
Some accessories such as jumper bars may modify the terminal block's ratings: complete information in the accessories catalogue pages.

Technical data valid for copper conductors only.

1SNC165015S0201 - Rev. B

M70/31.F stud terminal blocks
Feed-through - 31 mm 1.220 in spacing

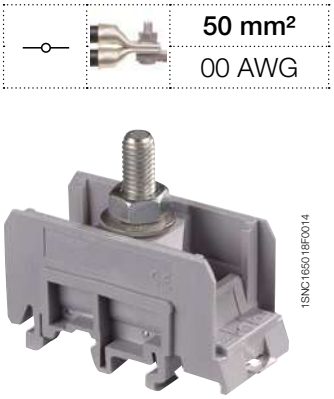

50 mm²	
00 AWG	

M70/31.F

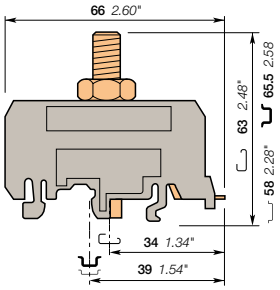

31 mm 1.220 in spacing

Description

- Compact one stud terminal block,
- Lug mounting in accordance with NF C 20-130 and DIN 46234,
- Various marking options,
- Rail or base mounting.

Ordering details

Description		Color	Type	Part Number		Pkg pce	Weight (1 pce) g
Feed-through	1 stud M8	Grey	M70/31.F	1SNA115144R1300		10	60.00

Main technical data

		NFC	DIN	UL	CSA
Lugs	Rigid: Solid/Stranded	6-70 mm²	2.5-70 mm²	4-00 AWG	max 0 AWG
	Flexible with insulated ferrule	6-50 mm²	2.5-50 mm²		
	Gauge	C5			

		IEC	DIN	UL	CSA
Screw clamp	Rigid: Solid/Stranded				
	Flexible without ferrule				
	Gauge				

	IEC	DIN	UL	CSA
Bar				
Rated current	150 A	150 A	175 A	200 A
Rated cross section	50 mm²	50 mm²	00 AWG	0 AWG
Rated voltage	1000 V		600 V	600 V
Impulse withstand voltage	8000 V			

Mounting instructions

Rail	G32, TH 35-7.5, TH 35-15
Lugs Tool	Wrench H13 mm
Torque	6-12 N.m 53.1-106.2 lb.in
Jumper screw Tool	
Torque	
Screw clamp Tool	
Torque	
Wire stripping length	

The connecting capacity data for one Rigid: Solid/Stranded, or one Flexible conductor (when applicable) is a mandatory information required by IEC, UL and CSA standards (Copper conductors). All other data are provided as supplementary information only. For more details, please consult our CB, UL or CSA certificates and technical datasheet available on http://www.TE.com

RoHS RoHS USR CSA Gost R

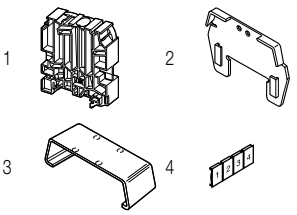

Accessories

	Description			Color	Type	Part Number		Pkg pce	Weight (1 pce) g
1	End stops	9.1 mm	0.358 in	Grey	BAMH	1SNA114836R0000		50	13.00
		10 mm	0.394 in	Dark grey	BAZH1	1SNK900102R0000		20	24.00
2	Circuit separators	Circuit separators		Grey	ECP31	1SNA113690R2100		10	6.70
3	Protecting covers			Transparent	CPP311	1SNA168204R1500		5	7.00
		marked cut: 2 blocks			CPP312	1SNA168203R1400		5	14.00
		marked cut: 3 blocks			CPP313	1SNA163409R0600		5	23.00
4	Terminal block markers	Label holder		Grey	PEP	1SNA113762R2400		50	0.46
		Terminal block markers		White	RC610	1SNA233000R0100		1	7.50

Complete list of accessories is indicated in the terminal block datasheet.
Some accessories such as jumper bars may modify the terminal block's ratings: complete information in the accessories catalogue pages.

Technical data valid for copper conductors only.

M120/35.F stud terminal blocks

Feed-through - 35 mm 1.380 in spacing

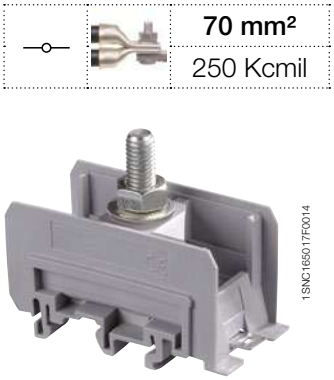

70 mm²
250 Kcmil

M120/35.F

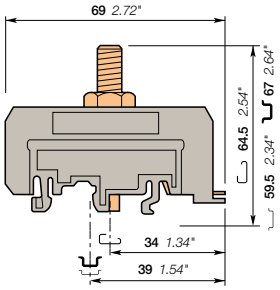

35 mm 1.380 in spacing

Description

- Compact one stud terminal block,
- Lug mounting in accordance with NF C 20-130 and DIN 46234,
- Various marking options,
- Rail or base mounting.

Ordering details

Description		Color	Type	Part Number		Pkg pce	Weight (1 pce) g
Feed-through	1 stud M8	Grey	M120/35.F	1SNA115147R1600		10	61.00

Main technical data

		NFC	DIN	UL	CSA
Lugs	Rigid: Solid/Stranded	6-95 mm²	2.5-70 mm²	2-250 Kcmil	max 000 AWG
	Flexible with insulated ferrule	6-70 mm²	2.5-70 mm²		
	Gauge	C6			

		IEC	DIN	UL	CSA
Screw clamp	Rigid: Solid/Stranded				
	Flexible without ferrule				
	Gauge				

	IEC	DIN	UL	CSA
Bar				
Rated current	192 A	150 A	255 A	270 A
Rated cross section	70 mm²	50 mm²	250 Kcmil	000 AWG
Rated voltage	1000 V		600 V	600 V
Impulse withstand voltage	8000 V			

Mounting instructions

Rail		G32, TH 35-7.5, TH 35-15
Lugs Tool		Wrench H13 mm
Torque		6-12 N.m 53.1-106.2 lb.in
Jumper screw Tool		
Torque		
Screw clamp Tool		
Torque		
Wire stripping length		

The connecting capacity data for one Rigid: Solid/Stranded, or one Flexible conductor (when applicable) is a mandatory information required by IEC, UL and CSA standards (Copper conductors). All other data are provided as supplementary information only. For more details, please consult our CB, UL or CSA certificates and technical datasheet available on http://www.TE.com

RoHS RoHS · USR · CSA · Gost R

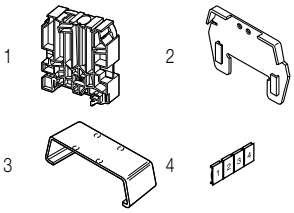

Accessories

	Description			Color	Type	Part Number		Pkg pce	Weight (1 pce) g
1	**End stops**	9.1 mm	0.358 in	Grey	BAMH	1SNA114836R0000		50	13.00
		10 mm	0.394 in	Dark grey	BAZH1	1SNK900102R0000		20	24.00
2	**Circuit separators**	Circuit separators		Grey	ECP35	1SNA113691R1600		10	10.00
3	**Protecting covers**			Transparent	CPP351	1SNA168206R1700		5	8.00
		marked cut: 2 blocks			CPP352	1SNA168205R1600		5	20.00
		marked cut: 3 blocks			CPP353	1SNA163418R2600		5	20.00
4	**Terminal block markers**	Label holder		Grey	PEP	1SNA113762R2400		50	0.46
		Terminal block markers		White	RC610	1SNA233000R0100		1	7.50

Complete list of accessories is indicated in the terminal block datasheet.
Some accessories such as jumper bars may modify the terminal block's ratings: complete information in the accessories catalogue pages.

Technical data valid for copper conductors only.

1SNC165017S0201 - Rev. B

M300/42.F stud terminal blocks
Feed-through - 42 mm 1.653 in spacing

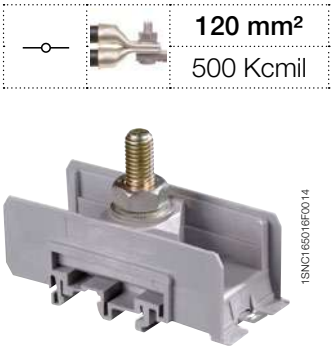

M300/42.F

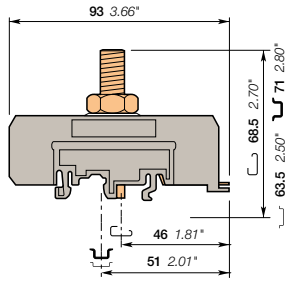

42 mm 1.653 in spacing

	120 mm²
	500 Kcmil

Description

- Compact one stud terminal block,
- Lug mounting in accordance with NF C 20-130 and DIN 46234,
- Various marking options,
- Rail or base mounting.

Ordering details

Description		Color	Type	Part Number		Pkg pce	Weight (1 pce) g
Feed-through	1 stud M10	Grey	M300/42.F	1SNA115150R2500		10	100.00

Main technical data

		NFC	DIN	UL	CSA
Lugs	Rigid: Solid/Stranded	50-150 mm²	6-150 mm²	0-500 Kcmil	max 500 Kcmil
	Flexible with insulated ferrule	50-120 mm²	6-120 mm²		
	Gauge	C8			

		IEC	DIN	UL	CSA
Screw clamp	Rigid: Solid/Stranded				
	Flexible without ferrule				
	Gauge				

	IEC	DIN	UL	CSA
Bar				
Rated current	269 A	269 A	230 A	550 A
Rated cross section	120 mm²	120 mm²	500 Kcmil	500 Kcmil
Rated voltage	1000 V		600 V	600 V
Impulse withstand voltage	8000 V			

Mounting instructions

Rail		G32, TH 35-7.5, TH 35-15
Lugs Tool		Wrench H16 mm
Torque		10-20 N.m 88.5-177 lb.in
Jumper screw Tool		
Torque		
Screw clamp Tool		
Torque		
Wire stripping length		

The connecting capacity data for one Rigid: Solid/Stranded, or one Flexible conductor (when applicable) is a mandatory information required by IEC, UL and CSA standards (Copper conductors). All other data are provided as supplementary information only. For more details, please consult our CB, UL or CSA certificates and technical datasheet available on http://www.TE.com

RoHS CSA Gost R

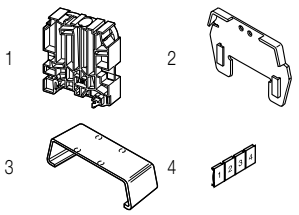

Accessories

	Description			Color	Type	Part Number		Pkg pce	Weight (1 pce) g
1	**End stops**	9.1 mm	0.358 in	Grey	BAMH	1SNA114836R0000		50	13.00
		10 mm	0.394 in	Dark grey	BAZH1	1SNK900102R0000		20	24.00
2	**Circuit separators**	Circuit separators		Grey	ECP42	1SNA113692R1700		10	20.00
3	**Protecting covers**			Transparent	CPP421	1SNA168208R2100		5	13.00
		marked cut: 2 blocks			CPP422	1SNA168207R1000		5	30.00
		marked cut: 3 blocks			CPP423	1SNA163424R1400		5	40.00
4	**Terminal block markers**	Label holder		Grey	PEP	1SNA113762R2400		50	0.46
		Terminal block markers		White	RC610	1SNA233000R0100		1	7.50

Complete list of accessories is indicated in the terminal block datasheet.
Some accessories such as jumper bars may modify the terminal block's ratings: complete information in the accessories catalogue pages.

Technical data valid for copper conductors only.

TE Connectivity's "positive retention" lock foot
Mounting instructions

Mounting
The locking action is automatic on mounting the block on the rail.

Unlocking
- Pull or push on the locking tag, using pliers as follows,
- Blocks mounted on DIN 1 rail: pull on the release tag,
- Blocks mounted on DIN 3 rails: push on the release tag,
- Remove the block from the rail by rotation, using a tube wrench while maintaining the action of the pliers.

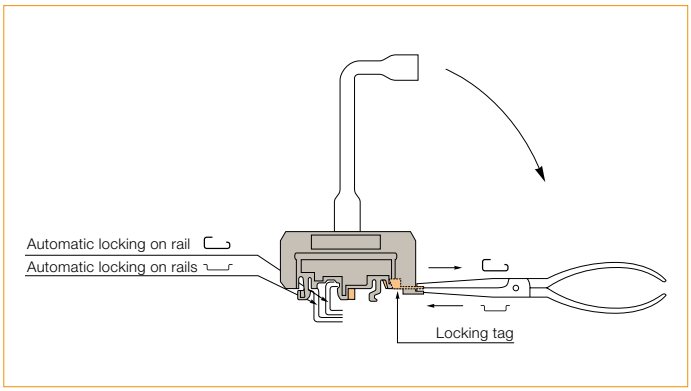

Space requirements of blocks with their partition or protective cover
Partition for TYPE I blocks.

Type	Part Number	Spacing	A	B	C	D	E	F
			Dimensions mm					
ECP26	1SNA113689R2400	26	76	35.5	40.5	67.5	62.5	70
ECP31	1SNA113690R2100	31	84	39.5	44.5	72.5	67.5	75
ECP35	1SNA113691R1600	35	90	42.5	47.5	82.5	77.5	85
ECP42	1SNA113692R1700	42	116	55.5	60.5	104.5	99.5	107

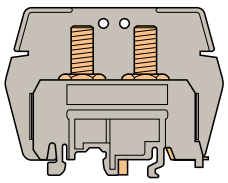

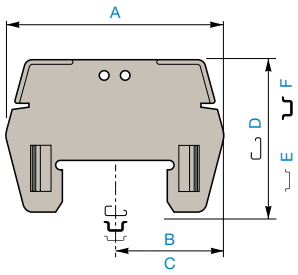

Marker-holder for power blocks
This marker-holder snaps on the ECP and ECS power blocks partitions, as well as on the type I power blocks compression clamps.

They can also be mounted on the SCF separator end sections.

Type	Part Number
PEP	1SNA113762R2400

This marker-holder can receive:
1 label RC610

Adhesive marker
High performance adhesive marker for most surface types.
See section on markers.

Type	Part Number
RPA	1SNA235463R2300

1SNC165027S0201

1SNC165027S0201

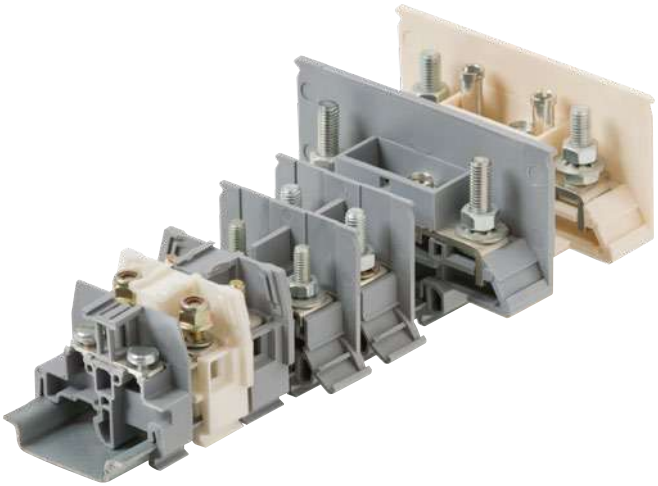

1SNC168014S0201

Dedicated applications terminal blocks
Ring lug technology

Overview			100
Feed-through			
6 mm² / 8 AWG	**M6/9.EE**		101
	M6/12.FF		102
	M6/13.FF		103 to 104
Feed-through			
16 mm²	**165LTTM5TM5**		105
Test disconnect			
16 mm²	**165ETTM5TM5**	With a screwdriver sliding link	106
	165ETTM5TM5-2	With a screwdriver sliding link and test	107

5

1SNC168014S0201

Feed-through

Section				
IEC	UL/CSA			
6 mm²	8 AWG	**M6/9.EE** 9.5 mm 0.374 in	**M6/12.FF** 12.5 mm 0.492 in	**M6/13.FF** 13 mm 0.512 in

Feed-through Test disconnect

Section				
IEC	UL/CSA			
16 mm²		**165LTTM5TM5** 16 mm 0.630 in	**165ETTM5TM5** 16 mm 0.630 in	**165ETTM5TM5-2** 16 mm 0.630 in

1SNC168015S0201

M6/9.EE ring lug terminal blocks

Feed-through - 9.5 mm 0.374 in spacing

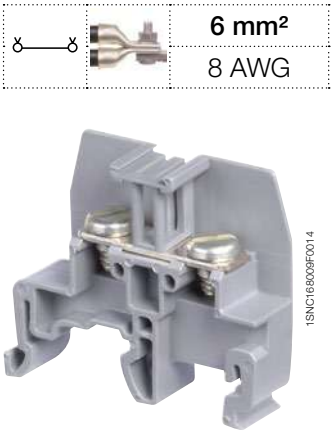

6 mm²	
8 AWG	

1SNC168009F0014

M6/9.EE

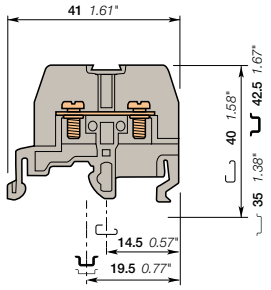

9.5 mm 0.374 in spacing

Description

- Strap screw terminal block for ring lug connection,
- Removable partition for jumpering.

Ordering details

Description		Color	Type	Part Number		Pkg pce	Weight (1 pce) g
Feed-through	With 2 screws CL 6-32 NC - 2A DIA 3.5 mm 0.138 in for lug max width 8.5 mm 0.334 in	Grey	M6/9.EE	1SNA115201R2500		50	7.00

Main technical data

		IEC	UL	CSA
Lugs	Rigid: Solid/Stranded	0.5-6 mm²	22-8 AWG	max 8 AWG
	Flexible with insulated ferrule	0.5-6 mm²		
	Gauge			
Rated current		41 A	40 A	40 A
Rated cross section		6 mm²	22-8 AWG	8 AWG
Rated voltage		800 V	600 V	600 V
Impulse withstand voltage		8 kV		
Protection			NEMA	

Mounting instructions

Rail	G32, TH 35-7.5, TH 35-15
Lugs Tool	Flat screwdriver 6.35 mm 0.250 in
Torque	0.8 - 1 N.m 7.1 - 8.9 lb.in
Wire stripping length	

The connecting capacity data for one Rigid: Solid/Stranded, or one Flexible conductor (when applicable) is a mandatory information required by IEC, UL and CSA standards (Copper conductors). All other data are provided as supplementary information only. For more details, please consult our CB, UL or CSA certificates and technical datasheet available on http://www.TE.com

RoHS USR CSA EAC

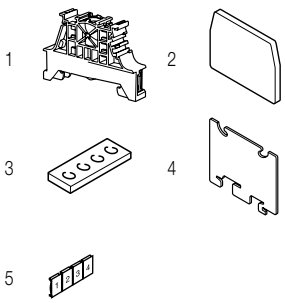

Accessories

	Description			Color	Type	Part Number		Pkg pce	Weight (1 pce) g
1	**End stops**	10 mm	0.394 in	Dark grey	BAM4	1SNK900001R0000		50	14.00
		5.2 mm	0.205 in		BAZ1	1SNK900002R0000		50	5.30
2	**End sections**	3 mm	0.118 in	Grey	FEM9	1SNA113067R1700		1	2.40
3	**Jumper bars**	2 poles	41 A		BJS9.5-2	1SNA173815R1600		10	1.00
		3 poles			BJS9.5-3	1SNA173816R1700		10	1.60
		4 poles			BJS9.5-4	1SNA173817R1000		10	2.20
		10 poles			BJS9.5-10	1SNA173819R2200		10	5.60
4	**Circuit separators**	1 mm	0.039 in	White	SCF9	1SNA103672R0100		20	2.00
5	**Terminal block markers**	Blank card		White	RCT810	1SNA236500R0600		1	7.60

Complete list of accessories is indicated in the terminal block datasheet.
Some accessories such as jumper bars may modify the terminal block's ratings: complete information in the accessories catalogue pages.

Technical data valid for copper conductors only.

1SNC168001S0201 - Rev. B

M6/12.FF ring lug terminal blocks

Feed-through - 12.5 mm 0.492 in spacing

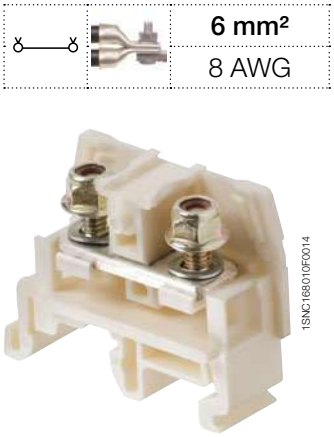

M6/12.FF

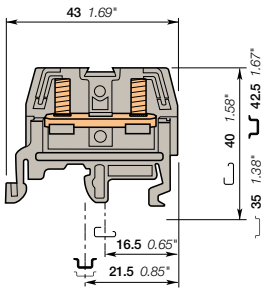

12.5 mm 0.492 in spacing

	6 mm²
	8 AWG

Description

- Terminal block for high vibration environment,
- Stud connection,
- Removable partition for jumpering.

Ordering details

Description		Color	Type	Part Number		Pkg pce	Weight (1 pce) g
Feed-through	With nuts, with 2 studs 8-32 UNC - 2A DIA 4.16 mm 0.164 in, height 9 mm 0.354 in, for lug max width 9.5 mm 0.374 in	White Grey	M6/12.FF M6/12.FF	1SNA115263R2200 1SNA400753R1000		50 50	20.00 20.00
	Without nuts, with 2 studs 8-32 UNC - 2A DIA 4.16 mm 0.164 in, height 9 mm 0.354 in, for lug max width 9.5 mm 0.374 in	Grey White	M6/12.FF M6/12.FF1	1SNA115511R0300 1SNA115262R2100		50 50	13.00 13.00

Main technical data

		IEC		UL	CSA
Lugs	Rigid: Solid/Stranded	max 6 mm²		8 AWG	18-10 AWG
	Flexible with insulated ferrule				
	Gauge				
Rated current		41 A		40 A	25 A
Rated cross section		6 mm²		8 AWG	10 AWG
Rated voltage		800 V		600 V	600 V
Impulse withstand voltage		8 kV			
Protection				NEMA	

Mounting instructions

Rail		G32, TH 35-7.5, TH 35-15
Lugs Tool		Wrench
Torque		1.8 N.m 15.65 lb.in
Wire stripping length		

The connecting capacity data for one Rigid: Solid/Stranded, or one Flexible conductor (when applicable) is a mandatory information required by IEC, UL and CSA standards (Copper conductors). All other data are provided as supplementary information only. For more details, please consult our CB, UL or CSA certificates and technical datasheet available on http://www.TE.com

RoHS USR cCSAus EAC

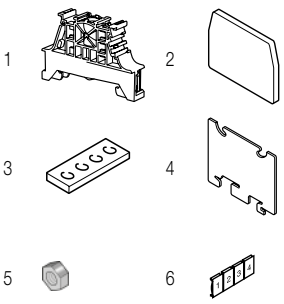

Accessories

	Description			Color	Type	Part Number		Pkg pce	Weight (1 pce) g
1	**End stops**	10 mm	0.394 in	Dark grey	BAM4	1SNK900001R0000		50	14.00
		5.2 mm	0.205 in		BAZ1	1SNK900002R0000		50	5.30
2	**End sections**	3 mm	0.118 in	Grey	FEM12F	1SNA116713R1600		25	1.25
3	**Jumper bars**	2 poles	41 A		BJS12.5-2	1SNA174393R2000		10	1.70
		3 poles			BJS12.5-3	1SNA174394R2100		10	2.70
		5 poles			BJS12.5-5	1SNA174395R2200		10	4.80
		10 poles			BJS12.5-10	1SNA174396R2300		10	9.90
4	**Circuit separators**	1 mm	0.039 in	White	SCF9	1SNA103672R0100		20	2.00
5	**Nuts**				ECR-3	1SNA175263T0600		100	1.00
6	**Terminal block markers**	Blank card		White	RCT810	1SNA236500R0600		1	7.60

Complete list of accessories is indicated in the terminal block datasheet.
Some accessories such as jumper bars may modify the terminal block's ratings: complete information in the accessories catalogue pages.

Technical data valid for copper conductors only.

1SNC168002S0201 - Rev. B

M6/13.FF ring lug terminal blocks
Feed-through - 13 mm 0.512 in spacing

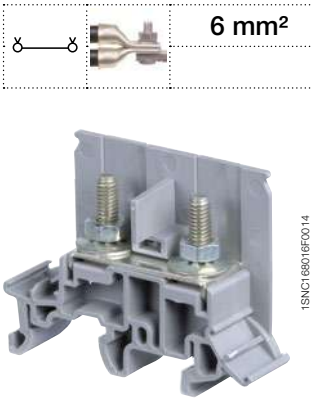

M6/13.FF

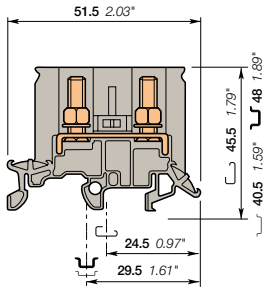

13 mm 0.512 in spacing

6 mm²

Description

- Two stud terminal block for ring lug connection,
- Removable partition for jumpering.

Ordering details

Description		Color	Type	Part Number		Pkg pce	Weight (1 pce) g
Feed-through	With 2 studs M4 x 16	Grey	M6/13.FF	1SNA115626R1600		25	16.00

Main technical data

		IEC		UL	CSA
Lugs	Rigid: Solid/Stranded	max 6 mm²		10 AWG	18-10 AWG
	Flexible with insulated ferrule	max 6 mm²			
	Gauge				
Rated current		41 A		35 A	25 A
Rated cross section		6 mm²		10 AWG	18-10 AWG
Rated voltage		800 V		600 V	600 V
Impulse withstand voltage		8 kV			
Protection				NEMA	

Mounting instructions

Rail		G32, TH 35-7.5, TH 35-15
Lugs Tool		Flat screwdriver Ø 6.35 mm Ø 0.250 in
Torque		1.2 - 2.5 N.m 10.6 - 21.8 lb.in
Wire stripping length		

The connecting capacity data for one Rigid: Solid/Stranded, or one Flexible conductor (when applicable) is a mandatory information required by IEC, UL and CSA standards (Copper conductors). All other data are provided as supplementary information only. For more details, please consult our CB, UL or CSA certificates and technical datasheet available on http://www.TE.com

RoHS RoHS | USR | cCSAus | EAC

Accessories

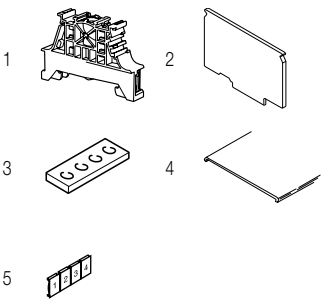

	Description			Color	Type	Part Number		Pkg pce	Weight (1 pce) g
1	**End stops**	10 mm	0.394 in	Dark grey	BAM4	1SNK900001R0000		50	14.00
		5.2 mm	0.205 in		BAZ1	1SNK900002R0000		50	5.30
2	**End sections**	1 mm	0.039 in	Grey	FEM13F	1SNA116977R1700		25	1.40
3	**Jumper bars**	10 poles	125 A		BJS13-10	1SNA167224R2700		10	10.00
4	**Protecting covers**				CPE43	1SNA280092R2500		2	
5	**Terminal block markers**	Blank card		White	RC1010	1SNA238000R1600		1	1.30

Complete list of accessories is indicated in the terminal block datasheet.
Some accessories such as jumper bars may modify the terminal block's ratings: complete information in the accessories catalogue pages.

Technical data valid for copper conductors only.

5

1SNC168003S0201 - Rev. B

M6/13.FF ring lug terminal blocks
Feed-through - 13 mm 0.512 in spacing

M6/13.FF

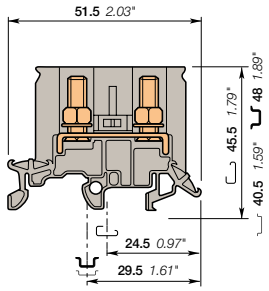

13 mm 0.512 in spacing

Description

- Two stud terminal block for ring lug connection,
- Removable partition for jumpering.

Ordering details

Description		Color	Type	Part Number		Pkg pce	Weight (1 pce) g
Feed-through	With 2 studs M5 x 16	Grey	M6/13.FF.1	1SNA115627R1700		25	16.00

Main technical data

		IEC		UL	CSA
Lugs	Rigid: Solid/Stranded	max 10 mm²		8 AWG	18-10 AWG
	Flexible with insulated ferrule	max 10 mm²			
	Gauge				
Rated current		57 A		50 A	25 A
Rated cross section		10 mm²		8 AWG	18-10 AWG
Rated voltage		800 V		600 V	600 V
Impulse withstand voltage		8 kV			
Protection				NEMA	

Mounting instructions

Rail		G32, TH 35-7.5, TH 35-15
Lugs Tool		Wrench H8 mm 0.310 in
Torque		2 - 4 N.m 17.7 - 35.4 lb.in
Wire stripping length		

The connecting capacity data for one Rigid: Solid/Stranded, or one Flexible conductor (when applicable) is a mandatory information required by IEC, UL and CSA standards (Copper conductors). All other data are provided as supplementary information only. For more details, please consult our CB, UL or CSA certificates and technical datasheet available on http://www.TE.com

RoHS USR cCSAus EAC

Accessories

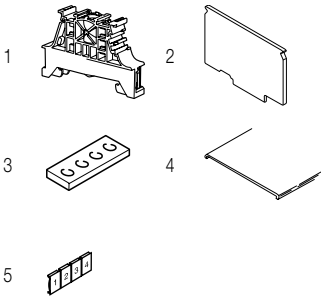

	Description			Color	Type	Part Number		Pkg pce	Weight (1 pce) g
1	**End stops**	10 mm	0.394 in	Dark grey	BAM4	1SNK900001R0000		50	14.00
		5.2 mm	0.205 in		BAZ1	1SNK900002R0000		50	5.30
2	**End sections**	1 mm	0.039 in	Grey	FEM13F	1SNA116977R1700		25	1.40
3	**Jumper bars**	13 mm	125 A		BJS13-10	1SNA167224R2700		10	10.00
4	**Protecting covers**				CPE43	1SNA280092R2500		2	
5	**Terminal block markers**	Blank card		White	RC1010	1SNA238000R1600		1	1.30

Complete list of accessories is indicated in the terminal block datasheet.
Some accessories such as jumper bars may modify the terminal block's ratings: complete information in the accessories catalogue pages.

Technical data valid for copper conductors only.

1SNC168004S0201 - Rev. B

165LTTM5TM5 ring lug terminal blocks
Feed-through - 16 mm 0.630 in spacing

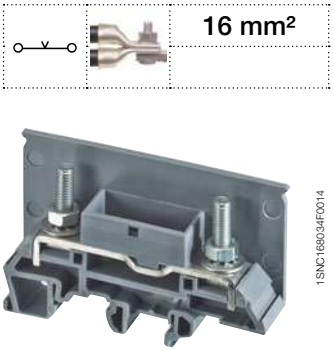

165LTTM5TM5

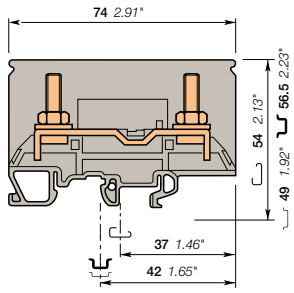

16 mm 0.630 in spacing

Description

- Two stud terminal block for ring lug connection,
- Profile aligned with disconnect terminal blocks type 165ETTM5TM5.

Ordering details

Description		Color	Type	Part Number		Pkg pce	Weight (1 pce) g
Feed-through	WIth 2 studs M5 x 16 and partition	Grey	165LTTM5TM5	1SNA216110R2200		25	40.00

Main technical data

		IEC		UL	CSA
Lugs	Rigid: Solid/Stranded	16 mm²		6 AWG	
	Flexible with insulated ferrule	16 mm²			
	Gauge				
Rated current		76 A		65 A	
Rated cross section		16 mm²		6 AWG	
Rated voltage		800 V		600 V	
Impulse withstand voltage		8 kV			
Protection				NEMA	

Mounting instructions

Rail		G32, TH 35-7.5, TH 35-15
Lugs Tool		Wrench H8 mm 0.310 in
Torque		2 - 4 N.m 17.7 - 35.4 lb.in
Wire stripping length		

The connecting capacity data for one Rigid: Solid/Stranded, or one Flexible conductor (when applicable) is a mandatory information required by IEC, UL and CSA standards (Copper conductors). All other data are provided as supplementary information only. For more details, please consult our CB, UL or CSA certificates and technical datasheet available on http://www.TE.com

RoHS RoHS USR EAC

Accessories

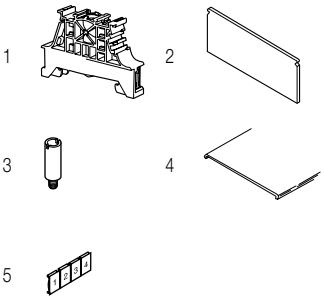

	Description			Color	Type	Part Number		Pkg pce	Weight (1 pce) g
1	**End stops**	10 mm	0.079 in	Dark grey	BAM4	1SNK900001R0000		50	14.00
		5.2 mm	0.205 in		BAZ1	1SNK900002R0000		50	5.30
2	**End sections**	2 mm	0.079 in	Grey	FEET80	1SNA216114R1200		10	7.20
3	**Test sockets**	DIA 4 mm	0.157 in		AL4-M3-R1	1SNA206722R0200		50	1.62
4	**Protecting covers**	Length 2 m	78 in		CPE80	1SNA280093R2600		1	103.00
5	**Terminal block markers**	Blank card			REH3	1SNA163155R2600		1	20.00

Complete list of accessories is indicated in the terminal block datasheet.
Some accessories such as jumper bars may modify the terminal block's ratings: complete information in the accessories catalogue pages.

Technical data valid for copper conductors only.

1SNC168007S0201 - Rev. B

165ETTM5TM5 ring lug terminal blocks

Test disconnect with a screwdriver sliding link - 16 mm 0.630 in spacing

16 mm²

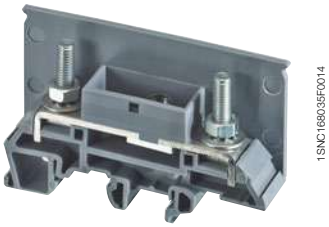

1SNC168035F0014

165ETTM5TM5

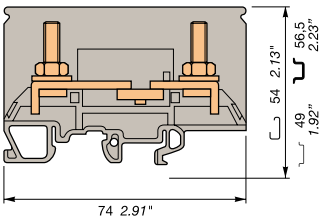

16 mm 0.630 in spacing

Description

- Secure your disconnect operations with the disconnect sliding link operated with a screwdriver,
- Two stud terminal block for ring lug connection,
- Profile aligned with terminal blocks type 165LTTM5TM5.

Ordering details

Description		Color	Type	Part Number		Pkg pce	Weight (1 pce) g
Disconnect	With 2 studs M5 x 18 fitted with 1 nut + 1 lock washer	Grey	165ETTM5TM5	1SNA216112R1000		25	22.00

Main technical data

		IEC	UL	CSA
Lugs	Rigid: Solid/Stranded	16 mm²		
	Flexible with insulated ferrule	16 mm²		
	Gauge			
Rated current		76 A		
Rated cross section		16 mm²		
Rated voltage		800 V		
Impulse withstand voltage		8 kV		
Protection			NEMA	

Mounting instructions

Rail	G32, TH 35-7.5, TH 35-15
Lugs Tool	Wrench H8 mm 0.310 in
Torque	2 - 4 N.m 17.7 - 35.4 lb.in
Disconnect device Tool	Flat screwdriver Ø 4 mm Ø 0.157 in
Torque	0.5 - 0.8 N.m 4.4 - 7.1 lb.in
Wire stripping length	

The connecting capacity data for one Rigid: Solid/Stranded, or one Flexible conductor (when applicable) is a mandatory information required by IEC, UL and CSA standards (Copper conductors). All other data are provided as supplementary information only. For more details, please consult our CB, UL or CSA certificates and technical datasheet available on http://www.TE.com

RoHS RoHS EAC EAC

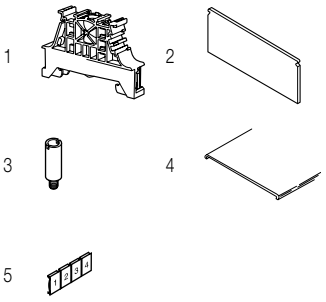

Accessories

	Description			Color	Type	Part Number		Pkg pce	Weight (1 pce) g
1	**End stops**	10 mm	0.079 in	Dark grey	BAM4	1SNK900001R0000		50	14.00
		5.2 mm	0.205 in		BAZ1	1SNK900002R0000		50	5.30
2	**End sections**	2 mm	0.079 in	Grey	FEET80	1SNA216114R1200		10	7.20
3	**Test sockets**	DIA 4 mm 0.157 in			AL4-M3-R1	1SNA206722R0200		50	1.62
4	**Protecting covers**	Length 2 m 78 in			CPE80	1SNA280093R2600		1	103.00
5	**Terminal block markers**	Blank card			REH3	1SNA163155R2600		1	20.00

Complete list of accessories is indicated in the terminal block datasheet.
Some accessories such as jumper bars may modify the terminal block's ratings: complete information in the accessories catalogue pages.

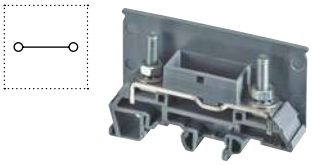

Feed-through wire lug terminal blocks

Description	Color	Type	Part Number		Pkg pce	Weight (1 pce) g
Feed-through	Grey	165LTTM5TM5	1SNA216110R2200		25	40.00

Technical data valid for copper conductors only.

1SNC168010S0201 - Rev. B

165ETTM5TM5 ring lug terminal blocks

Test disconnect with a screwdriver sliding link - 16 mm 0.630 in spacing

16 mm²

1SNC168023F0014

165ETTM5TM5

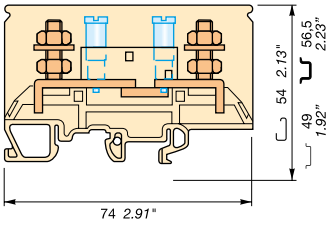

16 mm 0.630 in spacing

Description

- Secure your disconnect operations with the disconnect sliding link operated with a screwdriver,
- Ease your test operations with the 2 independent built-in test sockets compatible with DIA 4 mm 0.157 in test plugs,
- Two stud terminal block for ring lug connection,
- Profile aligned with terminal blocks type 165LTTM5TM5.

Ordering details

Description		Color	Type	Part Number		Pkg pce	Weight (1 pce) g
Disconnect	With 2 studs M5 x 18 fitted with 2 nuts + 1 washer, with test sockets DIA 4 mm 0.157 in	Beige	165ETTM5TM5-2	1SNA296117R1600		25	51.00

Main technical data

		IEC		UL	CSA
Lugs	Rigid: Solid/Stranded	16 mm²			
	Flexible with insulated ferrule	16 mm²			
	Gauge				
Rated current		76 A			
Rated cross section		16 mm²			
Rated voltage		800 V			
Impulse withstand voltage		8 kV			
Protection				NEMA	

Mounting instructions

Rail		G32, TH 35-7.5, TH 35-15
Lugs Tool		Wrench H8 mm 0.310 in
Torque		2 - 4 N.m 17.7 - 35.4 lb.in
Disconnect device Tool		Flat screwdriver Ø 4 mm Ø 0.157 in
Torque		0.5 - 0.8 N.m 4.4 - 7.1 lb.in
Wire stripping length		

The connecting capacity data for one Rigid: Solid/Stranded, or one Flexible conductor (when applicable) is a mandatory information required by IEC, UL and CSA standards (Copper conductors). All other data are provided as supplementary information only. For more details, please consult our CB, UL or CSA certificates and technical datasheet available on http://www.TE.com

RoHS RoHS · Gost R

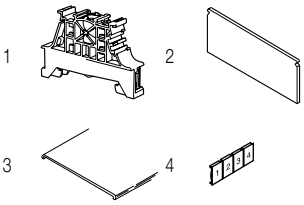

Accessories

	Description			Color	Type	Part Number		Pkg pce	Weight (1 pce) g
1	**End stops**	10 mm	0.079 in	Dark grey	BAM4	1SNK900001R0000		50	14.00
		5.2 mm	0.205 in		BAZ1	1SNK900002R0000		50	5.30
2	**End sections**	2 mm	0.079 in	Beige	FEET80	1SNA296114R1300		10	7.20
3	**Protecting covers**	Length 2 m 78 in			CPE80	1SNA280093R2600		1	103.00
4	**Terminal block markers**	Blank card			REH3	1SNA163155R2600		1	20.00

Complete list of accessories is indicated in the terminal block datasheet.
Some accessories such as jumper bars may modify the terminal block's ratings: complete information in the accessories catalogue pages.

Technical data valid for copper conductors only.

1SNC168012S0201 - Rev. B

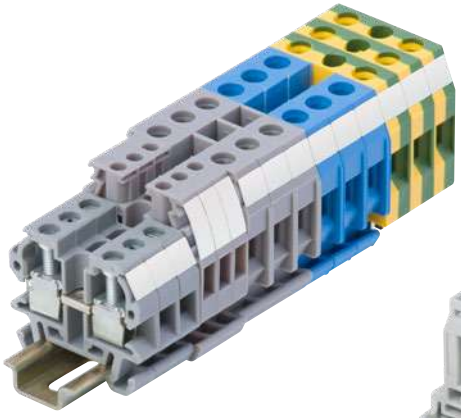

1SNC160099S0201

Overview				110
Screw clamp technology				
Rail TH 35				
Feed-through	4 mm² / 10-12 AWG	**MS4/6**		112
	6 mm² / 8 AWG	**MS6/8**		113
Rail TH 15				
Feed-through	1.5 mm² / 12 AWG	**DR1.5/4**		114
		DR1.5/5		115
	4 mm² / 10-12 AWG	**DR4/6**		117
Ground	4 mm² / 10-12 AWG	**DR4/6.P**		119
Disconnect	2.5 mm² / 12 AWG	**DR2.5/5.S**		120
Fuse	4 mm² / 12 AWG	**DR4/8.SF**		121
Spring clamp technology				
Rail TH 35				
Feed-through	2.5 mm² / 12 AWG	**DS2.5/5.2L**	2 connections	122
		DS2.5/10.4L	4 connections	123
Rail TH 15				
Feed-through	2.5 mm² / 12 AWG	**DR2.5/5.2L**	2 connections	124
		DR2.5/10.4L	4 connections	125
Ground	2.5 mm² / 12 AWG	**DR2.5/10.P.4L**	4 connections	126
Base mounting				
Feed-through	2.5 mm² / 12 AWG	**DB2.5/5.2L**	2 connections with flanges mounting	127
		DH2.5/5.2L	2 connections with snap in foot	128
ADO / screw clamp technology				
Rail TH 35				
Feed-through	1 mm² / 18 AWG	**DS2.5/5.ADO & DSE2.5/5.ADO**		129
	1.5 mm² / 16 AWG	**DS4/6.ADO & DSE4/6.ADO**		130
	2.5 mm² / 14 AWG	**DS4/8.ADO & DSE4/8.ADO**		131
Ground	2.5 mm² / 14 AWG	**DS4/8.P.ADO**		132
Rail TH 15				
Feed-through	1 mm² / 18 AWG	**DR2.5/5.ADO & DRE2.5/5.ADO**		133
	1.5 mm² / 16 AWG	**DR4/6.ADO & DRE4/6.ADO**		134
	2.5 mm² / 14 AWG	**DR4/8.ADO & DRE4/8.ADO**		135
Ground	2.5 mm² / 14 AWG	**DR4/8.P.ADO**		136
Base mounting				
Feed-through	1 mm² / 18 AWG	**DB2.5/5.ADO**	With flanges mounting	137
	1.5 mm² / 16 AWG	**DB4/6.ADO**	With flanges mounting	138
	2.5 mm² / 14 AWG	**DB4/8.ADO**	With flanges mounting	139
	1.5 mm² / 16 AWG	**DH4/6.ADO**	With snap in foot	140
ADO / ADO technology				
Rail TH 35				
Feed-through	1.5 mm² / 16 AWG	**DS1.5/6.ADO & DSE1.5/6.ADO**		141
	2.5 mm² / 14 AWG	**DS2.5/8.ADO & DSE2.5/8.ADO**		142
Ground	2.5 mm² / 14 AWG	**DS2.5/8.P.ADO**		143
Rail TH 15				
Feed-through	1 mm² / 18 AWG	**DR1/5.ADO & DRE1/5.ADO**		144
	1.5 mm² / 16 AWG	**DR1.5/6.ADO & DRE1.5/6.ADO**		145
	2.5 mm² / 14 AWG	**DR2.5/8.ADO & DRE2.5/8.ADO**		146
Ground	2.5 mm² / 14 AWG	**DR2.5/8.P.ADO**		147
Base mounting				
Feed-through	1.5 mm² / 16 AWG	**DB1.5/6.ADO**	With flanges mounting	148
	2.5 mm² / 14 AWG	**DB2.5/8.ADO**	With flanges mounting	149
	1.5 mm² / 16 AWG	**DH1.5/6.ADO**	With snap in foot	150

1SNC160099S0201

Screw clamp technology

Section		Feed-through		Ground	Disconnect	Fuse
IEC	UL/CSA					
1.5 mm²	12 AWG		**DR1.5/4** 4 mm 0.157 in			
1.5 mm²	12 AWG		**DR1.5/5** 5 mm 0.197 in			
2.5 mm²	12 AWG				**DR2.5/5 S** 5.08 mm 0.200 in	
4 mm²	10-12 AWG	**MS4/6** 6 mm 0.236 in	**DR4/6** 6 mm 0.236 in	**DR4/6.P** 6 mm 0.236 in		**DR4/8.SF** 8 mm 0.315 in
6 mm²	8 AWG	**MS6/8** 8 mm 0.315 in				
Rail / mounting		TH 35	TH 15	TH 15	TH 15	TH 15

Spring clamp technology

Section		Feed-through				Ground
IEC	UL/CSA					
2.5 mm²	12 AWG	**DS2.5/5.2L** 5 mm 0.197 in	**DR2.5/5.2L** 5 mm 0.197 in	**DB2.5/5.2L** 5 mm 0.197 in	**DH2.5/5.2L** 5 mm 0.197 in	
2.5 mm²	12 AWG	**DS2.5/10.4L** 10 mm 0.394 in	**DR2.5/10.4L** 10 mm 0.394 in			**DR2.5/10.P.4L** 10 mm 0.394 in
Rail / mounting		TH 35	TH 15	BASE	BASE	TH 15

1SNC160061S0201

ADO / screw clamp technology

Section		Feed-through				Ground	
IEC	UL/CSA						
1 mm²	18 AWG	DS2.5/5.ADO 5 mm 0.197 in	DR2.5/5.ADO 5 mm 0.197 in	DB2.5/5.ADO 5 mm 0.197 in			
1.5 mm²	16 AWG	DS4/6.ADO 6 mm 0.236 in	DR4/6.ADO 6 mm 0.236 in	DB4/6.ADO 6 mm 0.236 in	DH4/6.ADO 6 mm 0.236 in		
2.5 mm²	14 AWG	DS4/8.ADO 8 mm 0.315 in	DR4/8.ADO 8 mm 0.315 in	DB4/8.ADO 8 mm 0.315 in		DS4/8.P.ADO 8 mm 0.315 in	DR4/8.P.ADO 8 mm 0.315 in
Rail / mounting		TH 35	TH 15	BASE	BASE	TH 35	TH 15

ADO / ADO technology

Section		Feed-through				Ground	
IEC	UL/CSA						
1 mm²	18 AWG		DR1/5.ADO 5 mm 0.197 in				
1.5 mm²	16 AWG	DS1.5/6.ADO 6 mm 0.236 in	DR1.5/6.ADO 6 mm 0.236 in	DB1.5/6.ADO 6 mm 0.236 in	DH1.5/6.ADO 6 mm 0.236 in		
2.5 mm²	14 AWG	DS2.5/8.ADO 8 mm 0.315 in	DR2.5/8.ADO 8 mm 0.315 in	DB2.5/8.ADO 8 mm 0.315 in		DS2.5/8.P.ADO 8 mm 0.315 in	DR2.5/8.P.ADO 8 mm 0.315 in
Rail / mounting		TH 35	TH 15	BASE	BASE	TH 35	TH 15

1SNC160061S0201

MS4/6 screw clamp terminal blocks

Miniblocks - 6 mm 0.236 in spacing

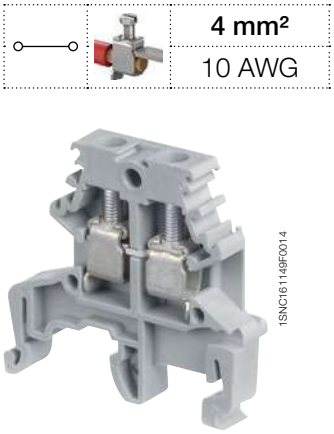

MS4/6

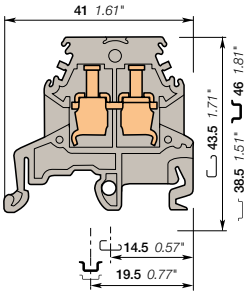

6 mm 0.236 in spacing

4 mm²
10 AWG

Description

- Save space with compact over-all dimensions terminal block,
- Flexibility: snap onto symmetrical and asymmetrical rails.

Ordering details

Description		Color	Type	Part Number		Pkg pce	Weight (1 pce) g
Miniblocks	Feed-through	Grey	MS4/6	1SNA115265R2400		100	6.00
		Yellow	MS4/6	1SNA105265R0300		100	6.00

Main technical data

		IEC	UL	CSA
1 conductor per clamp	Rigid: Solid/Stranded	0.2-4 mm²	22-10 AWG	22-12 AWG
	Flexible without ferrule	0.22-4 mm²		
	Flexible with insulated ferrule			
	Gauge	A4		
Rated current / Rated cross section		32 A / 4 mm²	30 A / 10 AWG	25 A / 12 AWG
Rated short-time withstand current (1s)		480 A		
Rated voltage		630 V	600 V	300 V
Impulse withstand voltage		4000 V		
Protection		IP20	NEMA 1	

Mounting instructions

Rail	G32, TH 35-7.5, TH 35-15
Wire stripping length	10 mm 0.39 in
Tool	Flat screwdriver Ø 4 mm Ø 0.157 in
Torque	0.5 - 0.8 Nm 4.4 - 7.1 lb.in

The connecting capacity data for one Rigid: Solid/Stranded, or one Flexible conductor (when applicable) is a mandatory information required by IEC, UL and CSA standards (Copper conductors). All other data are provided as supplementary information only. For more details, please consult our CB, UL or CSA certificates and technical datasheet available on http://www.TE.com

CE RoHS USR CSA Gost R

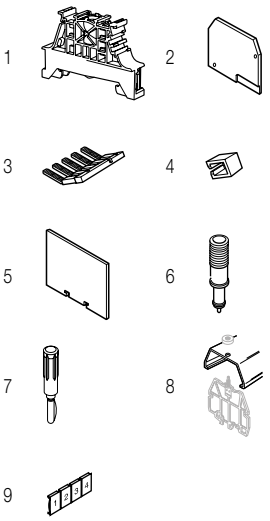

Accessories

	Description			Color	Type	Part Number		Pkg pce	Weight (1 pce) g
1	**End stops**	10 mm	0.394 in	Dark grey	BAM4	1SNK900001R0000		50	14.00
		5.2 mm	0.205 in		BAZ1	1SNK900002R0000		50	5.30
2	**End sections**	3 mm	0.118 in	Grey	FEMS6	1SNA113885R0100		20	1.80
3	**Lateral jumper bars**	2 poles	35 A	Grey	PC6-2	1SNA113546R1400		10	2.00
		3 poles			PC6-3	1SNA116536R0500		10	2.00
		4 poles			PC6-4	1SNA116537R0600		10	1.00
		10 poles			PC6-10	1SNA113548R2600		10	8.00
4	**Insulating tips**				EIP	1SNA113550R2400		10	
5	**Circuit separators**	2.4 mm	0.094 in	Grey	SCFEX3	1SNA103620R0100		10	30.00
		3 mm	0.118 in		SCFCV1-2	1SNA116795R1100		10	8.00
6	**Test adapters**			Yellow	DCJ	1SNA173059R0300		10	2.40
7	**Test plugs**	DIA 2 mm	0.079 in	Black	FC2	1SNA007865R2600		100	
8	**Protecting covers**	Length 1 m	39 in	Transparent	CPV1-2	1SNA176816R1200		1	
9	**Terminal block markers**			White	RC610	1SNA233000R0100		1	7.50

Complete list of accessories is indicated in the terminal block datasheet.
Some accessories such as jumper bars may modify the terminal block's ratings: complete information in the accessories catalogue pages.

Technical data valid for copper conductors only.

1SNC161124S0201 - Rev. A

MS6/8 screw clamp terminal blocks

Miniblocks - 8 mm 0.315 in spacing

6 mm²
8 AWG

MS6/8

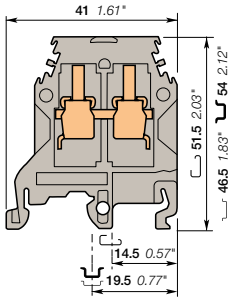

8 mm 0.315 in spacing

Description

- Save space with compact over-all dimensions terminal block,
- Flexibility: snap onto symmetrical and asymmetrical rails.

Ordering details

Description		Color	Type	Part Number		Pkg pce	Weight (1 pce) g
Miniblocks	Feed-through	Grey	MS6/8	1SNA115278R0100		50	12.00

Main technical data

		IEC	UL	CSA
1 conductor per clamp	Rigid: Solid/Stranded	0.5-10 mm²	22-8 AWG	20-8 AWG
	Flexible without ferrule	0.5-6 mm²		
	Flexible with insulated ferrule			
	Gauge	A5		
Rated current / Rated cross section		41 A / 6 mm²	50 A / 8 AWG	40 A / 8 AWG
Rated short-time withstand current (1s)		720 A		
Rated voltage		500 V	300 V	300 V
Impulse withstand voltage		6000 V		
Protection		IP20	NEMA 1	

Mounting instructions

Rail	G32, TH 35-7.5, TH 35-15
Wire stripping length	12 mm 0.47 in
Tool	Flat screwdriver Ø 4 - 5 mm Ø 0.157 - 0.197 in
Torque	0.8 - 1 Nm 7.1 - 8.9 lb.in

The connecting capacity data for one Rigid: Solid/Stranded, or one Flexible conductor (when applicable) is a mandatory information required by IEC, UL and CSA standards (Copper conductors). All other data are provided as supplementary information only. For more details, please consult our CB, UL or CSA certificates and technical datasheet available on http://www.TE.com

CE RoHS USR CSA Gost R

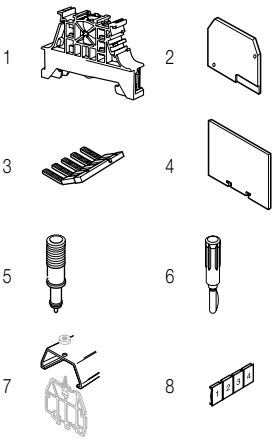

Accessories

	Description			Color	Type	Part Number		Pkg pce	Weight (1 pce) g
1	**End stops**	10 mm	0.394 in	Dark grey	BAM4	1SNK900001R0000		50	14.00
		5.2 mm	0.205 in		BAZ1	1SNK900002R0000		50	5.30
2	**End sections**	3 mm	0.118 in	Grey	FEMS8	1SNA114195R0600		25	1.90
3	**Lateral jumper bars**	2 poles	50 A		PC8-2	1SNA116538R1700		10	3.00
		3 poles			PC8-3	1SNA116539R1000		10	4.00
		4 poles			PC8-4	1SNA116540R2500		10	6.00
		10 poles			PC8-10	1SNA163313R2400		10	14.00
4	**Circuit separators**	2.4 mm	0.094 in	Grey	SCFEX3	1SNA103620R0100		10	30.00
		3 mm	0.118 in		SCFCV1-2	1SNA116795R1100		10	8.00
5	**Test adapters**			Orange	DCO	1SNA173060R0000		10	2.30
6	**Test plugs**	DIA 2 mm 0.079 in		Black	FC2	1SNA007865R2600		100	
7	**Protecting covers**	Length 1 m 39 in		Transparent	CPV1-2	1SNA176816R1200		1	
8	**Terminal block markers**	Blank card		White	RC810	1SNA234000R0200		1	8.20

Complete list of accessories is indicated in the terminal block datasheet.
Some accessories such as jumper bars may modify the terminal block's ratings: complete information in the accessories catalogue pages.

Technical data valid for copper conductors only.

1SNC161139S0201 - Rev. A

DR1.5/4 screw clamp terminal blocks

Miniblocks - 4 mm 0.157 in spacing

1.5 mm²

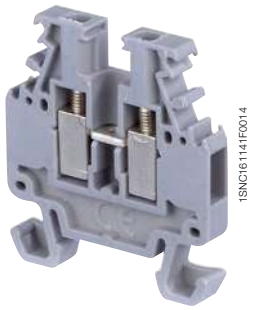

DR1.5/4

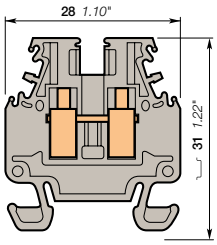

4 mm 0.157 in spacing

Description

Save space with compact over-all dimensions terminal block.

Ordering details

Description		Color	Type	Part Number		Pkg pce	Weight (1 pce) g
Miniblocks	Feed-through	Grey	DR1.5/4	1SNA110106R2500		50	3.00

Main technical data

		IEC	UL	CSA
1 conductor per clamp	Rigid: Solid/Stranded	0.2-1.5 mm²		
	Flexible without ferrule	0.22-1.5 mm²		
	Flexible with insulated ferrule			
	Gauge	A1		
Rated current / Rated cross section		17.5 A / 1.5 mm²		
Rated short-time withstand current (1s)		180 A		
Rated voltage		500 V		
Impulse withstand voltage		6000 V		
Protection		IP20	NEMA 1	

Mounting instructions

Rail	TH 15-5.5
Wire stripping length	7 mm 0.275 in
Tool	Flat screwdriver Ø 2.5 mm Ø 0.98 in
Torque	0.4 - 0.6 Nm 3.5 - 5.3 lb.in

The connecting capacity data for one Rigid: Solid/Stranded, or one Flexible conductor (when applicable) is a mandatory information required by IEC, UL and CSA standards (Copper conductors). All other data are provided as supplementary information only. For more details, please consult our CB, UL or CSA certificates and technical datasheet available on http://www.TE.com

CE RoHS Gost R

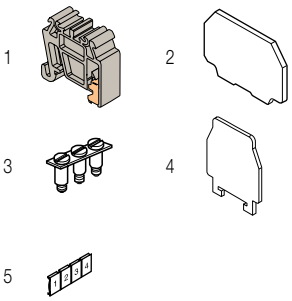

Accessories

	Description			Color	Type	Part Number		Pkg pce	Weight (1 pce) g
1	**End stops**	6.5 mm	0.256 in	Grey	BADRL	1SNA199420R2100		50	2.00
2	**End sections**	1 mm	0.039 in	Grey	FED2-4	1SNA215580R2100		25	1.40
3	**Jumper bars**	2 poles	17.5 A		BJM4	1SNA205735R0600		10	1.00
		3 poles				1SNA205736R0700		10	2.00
		5 poles				1SNA205737R0000		10	3.00
		10 poles				1SNA205738R1100		10	6.00
4	**Circuit separators**	0.3 mm	0.012 in	White	SCDR61	1SNA173016R1000		25	0.40
5	**Terminal block markers**	Blank card		White	RC410	1SNA229000R1500		1	5.16

Complete list of accessories is indicated in the terminal block datasheet.
Some accessories such as jumper bars may modify the terminal block's ratings: complete information in the accessories catalogue pages.

Technical data valid for copper conductors only.

1SNC161125S0201 - Rev. A

DR1.5/5 screw clamp terminal blocks

Miniblocks - 5 mm 0.197 in spacing

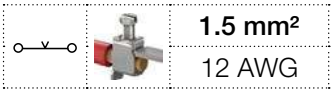

1.5 mm²
12 AWG

DR1.5/5

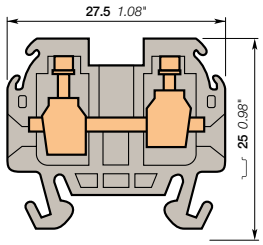

5 mm 0.197 in spacing

Description

Save space with compact over-all dimensions terminal block.

Ordering details

Description		Color	Type	Part Number		Pkg pce	Weight (1 pce) g
Miniblocks	Feed-through	Grey	DR1.5/5	1SNA115510R1600		100	5.00

Main technical data

		IEC	UL	CSA
1 conductor per clamp	Rigid: Solid/Stranded	0.2-2.5 mm²	28 - 12 AWG	28 - 14 AWG
	Flexible without ferrule	0.22-1.5 mm²		
	Flexible with insulated ferrule			
	Gauge			
Rated current / Rated cross section		20 A / 1.5 mm²	20 A / 12 AWG	20 A / 14 AWG
Rated short-time withstand current (1s)		180 A		
Rated voltage		250 V	300 V	300 V
Impulse withstand voltage				
Protection		IP20	NEMA 1	

Mounting instructions

Rail	TH 15-5.5
Wire stripping length	8.5 mm 0.335 in
Tool	Flat screwdriver Ø 3.5 mm Ø 0.138 in
Torque	0.4 - 0.6 Nm 3.5 - 5.3 lb.in

The connecting capacity data for one Rigid: Solid/Stranded, or one Flexible conductor (when applicable) is a mandatory information required by IEC, UL and CSA standards (Copper conductors).
All other data are provided as supplementary information only. For more details, please consult our CB, UL or CSA certificates and technical datasheet available on http://www.TE.com

CE RoHS USR CSA Gost R

Accessories

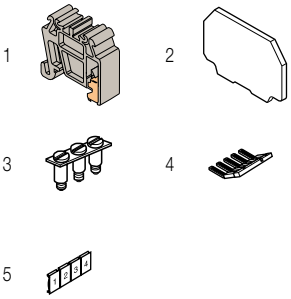

	Description			Color	Type	Part Number		Pkg pce	Weight (1 pce) g
1	**End stops**	6.5 mm	0.256 in	Grey	BADRL	1SNA199420R2100		50	2.00
2	**End sections**	1 mm	0.039 in	Grey	FEDR5	1SNA117318R2300		25	0.80
3	**Jumper bars**	2 poles	24 A		BJMI5DR	1SNA176704R0200		10	2.00
		3 poles				1SNA176705R0300		10	3.00
		4 poles				1SNA176706R0400		10	4.00
		10 poles				1SNA176708R1600		10	12.00
4	**Lateral jumper bars**	10 poles	25 A		PC51-10	1SNA167908R0600		10	5.00
5	**Terminal block markers**	Blank card		White	RC55	1SNA230000R1200		1	2.90

Complete list of accessories is indicated in the terminal block datasheet.
Some accessories such as jumper bars may modify the terminal block's ratings: complete information in the accessories catalogue pages.

Technical data valid for copper conductors only.

1SNC161145S0201 - Rev. A

DR1.5/5 screw clamp terminal blocks

Miniblocks - 5 mm 0.197 in spacing

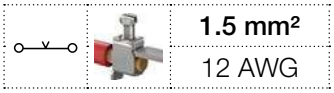

1.5 mm²
12 AWG

DR1.5/5

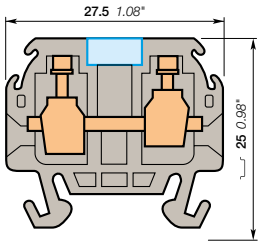

5 mm 0.197 in spacing

Description

Save space with compact over-all dimensions terminal block.

Ordering details

Description		Color	Type	Part Number		Pkg pce	Weight (1 pce) g
Miniblocks	Feed-through with partition	Grey	DR1.5/5.1	1SNA112086R0200		100	5.00

Main technical data

		IEC	UL	CSA
1 conductor per clamp	Rigid: Solid/Stranded	0.2-2.5 mm²		28-14 AWG
	Flexible without ferrule	0.22-1.5 mm²		
	Flexible with insulated ferrule			
	Gauge			
Rated current / Rated cross section		20 A / 1.5 mm²		20 A / 14 AWG
Rated short-time withstand current (1s)		180 A		
Rated voltage		250 V		300 V
Impulse withstand voltage				
Protection		IP20	NEMA 1	

Mounting instructions

Rail	TH 15-5.5
Wire stripping length	8.5 mm 0.335 in
Tool	Flat screwdriver Ø 3.5 mm Ø 0.138 in
Torque	0.4 - 0.6 Nm 3.5 - 5.3 lb.in

The connecting capacity data for one Rigid: Solid/Stranded, or one Flexible conductor (when applicable) is a mandatory information required by IEC, UL and CSA standards (Copper conductors). All other data are provided as supplementary information only. For more details, please consult our CB, UL or CSA certificates and technical datasheet available on http://www.TE.com

CE RoHS CSA Gost R

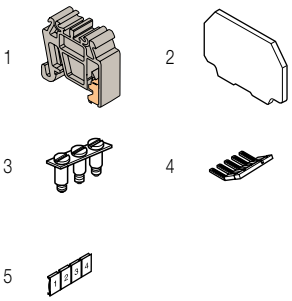

Accessories

	Description			Color	Type	Part Number		Pkg pce	Weight (1 pce) g
1	**End stops**	6.5 mm	0.256 in	Grey	BADRL	1SNA199420R2100		50	2.00
2	**End sections**	1 mm	0.039 in	Grey	FEDR5	1SNA117318R2300		25	0.80
3	**Jumper bars**	2 poles	24 A		BJMI5DR	1SNA176704R0200		10	2.00
		3 poles				1SNA176705R0300		10	3.00
		4 poles				1SNA176706R0400		10	4.00
		10 poles				1SNA176708R1600		10	12.00
		20 poles			BJS5-20	1SNA177652R0600		10	4.00
4	**Lateral jumper bars**	10 poles	25 A		PC51-10	1SNA167908R0600		10	5.00
5	**Terminal block markers**	Blank card		White	RC55	1SNA230000R1200		1	2.90

Complete list of accessories is indicated in the terminal block datasheet.
Some accessories such as jumper bars may modify the terminal block's ratings: complete information in the accessories catalogue pages.

Technical data valid for copper conductors only.

DR4/6 screw clamp terminal blocks

Miniblocks - 6 mm 0.236 in spacing

DR4/6

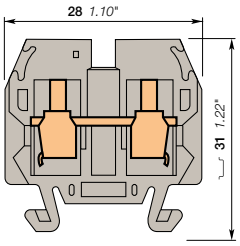

6 mm 0.236 in spacing

	4 mm²
	12 AWG

Description

Save space with compact over-all dimensions terminal block.

Ordering details

Description		Color	Type	Part Number		Pkg pce	Weight (1 pce) g
Miniblocks	Feed-through	Grey	DR4/6	1SNA110251R0500		50	6.00
		Blue	DR4/6.N	1SNA120251R0700		50	6.00

Main technical data

		IEC	UL	CSA
1 conductor per clamp	Rigid: Solid/Stranded	0.2-4 mm²	22 - 12 AWG	28-10 AWG
	Flexible without ferrule	0.22-4 mm²		
	Flexible with insulated ferrule			
	Gauge			
Rated current / Rated cross section		30 A / 4 mm²	20 A / 12 AWG	25 A / 10 AWG
Rated short-time withstand current (1s)		480 A		
Rated voltage		500 V	250 V	600 V
Impulse withstand voltage				
Protection		IP20	NEMA 1	

Mounting instructions

Rail	TH 15-5.5
Wire stripping length	9.5 mm 0.37 in
Tool	Flat screwdriver Ø 4 mm Ø 0.157 in
Torque	0.5 - 0.8 Nm 4.4 - 7.1 lb.in

The connecting capacity data for one Rigid: Solid/Stranded, or one Flexible conductor (when applicable) is a mandatory information required by IEC, UL and CSA standards (Copper conductors). All other data are provided as supplementary information only. For more details, please consult our CB, UL or CSA certificates and technical datasheet available on http://www.TE.com

CE RoHS USR cCSAus Gost R

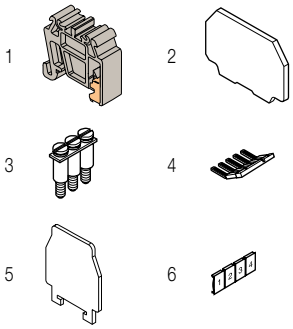

Accessories

	Description			Color	Type	Part Number		Pkg pce	Weight (1 pce) g
1	**End stops**	6.5 mm	0.256 in	Grey	BADRL	1SNA199420R2100		50	2.00
2	**End sections**	1 mm	0.039 in	Grey	FEDR61	1SNA117600R0300		25	0.80
3	**Jumper bars**	2 poles	32 A		BJM62	1SNA173217R2600		10	2.00
		3 poles				1SNA173218R0700		10	3.00
		4 poles				1SNA173219R0000		10	4.00
		10 poles				1SNA173226R2700		10	10.00
4	**Lateral jumper bars**	10 poles	35 A		PC61-10	1SNA163311R2200		10	5.00
5	**Circuit separators**	0.3 mm	0.012 in	White	SCDR61	1SNA173016R1000		25	0.40
6	**Terminal block markers**	Blank card		White	RC65	1SNA232000R0000		1	3.60

Complete list of accessories is indicated in the terminal block datasheet.
Some accessories such as jumper bars may modify the terminal block's ratings: complete information in the accessories catalogue pages.

Ground screw clamp terminal blocks

Description		Color	Type	Part Number		Pkg pce	Weight (1 pce) g
Ground	Profile aligned with DR4/6...	Green-yellow	DR4/6.P	1SNA160496R2600		50	10.00

Technical data valid for copper conductors only.

1SNC161126S0201 - Rev. A

DR4/6.1 screw clamp terminal blocks

Miniblocks - 6 mm 0.236 in spacing

4 mm²
12 AWG

DR4/6.1

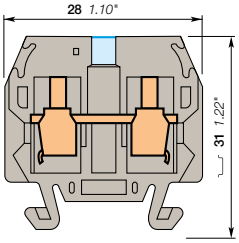

6 mm 0.236 in spacing

Description

Save space with compact over-all dimensions terminal block.

Ordering details

Description		Color	Type	Part Number		Pkg pce	Weight (1 pce) g
Miniblocks	Feed-through with partition	Grey	DR4/6.1	1SNA110491R1700		50	6.00
	Feed-through	Blue	DR4/6.1.N	1SNA120491R1100		50	6.00

Main technical data

		IEC	UL	CSA
1 conductor per clamp	Rigid: Solid/Stranded	0.2-4 mm²		28-10 AWG
	Flexible without ferrule	0.22-4 mm²		
	Flexible with insulated ferrule			
	Gauge			
Rated current / Rated cross section		30 A / 4 mm²		25 A / 10 AWG
Rated short-time withstand current (1s)		480 A		
Rated voltage		500 V		600 V
Impulse withstand voltage				
Protection		IP20	NEMA 1	

The connecting capacity data for one Rigid: Solid/Stranded, or one Flexible conductor (when applicable) is a mandatory information required by IEC, UL and CSA standards (Copper conductors). All other data are provided as supplementary information only. For more details, please consult our CB, UL or CSA certificates and technical datasheet available on http://www.TE.com

CE RoHS cCSAus Gost R

Mounting instructions

Rail	TH 15-5.5
Wire stripping length	9.5 mm 0.37 in
Tool	Flat screwdriver Ø 4 mm Ø 0.157 in
Torque	0.5 - 0.8 Nm 4.4 - 7.1 lb.in

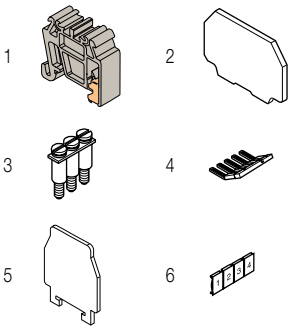

Accessories

	Description			Color	Type	Part Number		Pkg pce	Weight (1 pce) g
1	**End stops**	6.5 mm	0.256 in	Grey	BADRL	1SNA199420R2100		50	2.00
2	**End sections**	1 mm	0.039 in	Grey	FEDR61	1SNA117600R0300		25	0.80
3	**Jumper bars**	2 poles	32 A		BJM62	1SNA173217R2600		10	2.00
		3 poles				1SNA173218R0700		10	3.00
		4 poles				1SNA173219R0000		10	4.00
		10 poles				1SNA173226R2700		10	10.00
4	**Lateral jumper bars**	10 poles	35 A		PC61-10	1SNA163311R2200		10	5.00
5	**Circuit separators**	0.3 mm	0.012 in	White	SCDR61	1SNA173016R1000		25	0.40
6	**Terminal block markers**	Blank card		White	RC65	1SNA232000R0000		1	3.60

Complete list of accessories is indicated in the terminal block datasheet.
Some accessories such as jumper bars may modify the terminal block's ratings: complete information in the accessories catalogue pages.

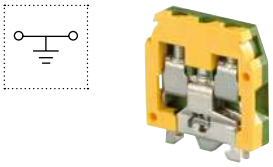

Ground screw clamp terminal blocks

Description		Color	Type	Part Number		Pkg pce	Weight (1 pce) g
Ground	Profile aligned with DR4/6...	Green-yellow	DR4/6.P	1SNA160496R2600		50	10.00

Technical data valid for copper conductors only.

1SNC161130S0201 - Rev. A

DR4/6.P screw clamp terminal blocks

Miniblocks - 6 mm 0.236 in spacing

DR4/6.P

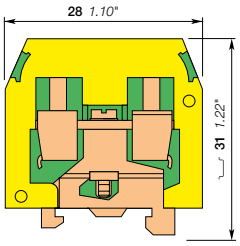

6 mm 0.236 in spacing

		4 mm²
		12 AWG

Description

- Save space with compact over-all dimensions terminal block,
- For DIN 2 rail,
- Reliable electrical and mechanical contact with the rail.

Ordering details

Description		Color	Type	Part Number		Pkg pce	Weight (1 pce) g
Ground	Screwless rail connection	Green-yellow	DR4/6.P	1SNA160496R2600		50	10.00

Main technical data

		IEC	UL	CSA
1 conductor per clamp	Rigid: Solid/Stranded	0.2-4 mm²	22-12 AWG	28-10 AWG
	Flexible without ferrule	0.22-4 mm²		
	Flexible with insulated ferrule			
	Gauge			
Rated cross section		4 mm²	12 AWG	10 AWG
Rated short-time withstand current (1s)		480 A		

Mounting instructions

Rail		TH 15-5.5
Wire stripping length		9.5 mm 0.37 in
Screw clamp Tool		Flat screwdriver Ø 4 mm Ø 0.157 in
Torque		0.5 - 0.8 N.m 4.4 - 7.1 lb.in

The connecting capacity data for one Rigid: Solid/Stranded, or one Flexible conductor (when apply) is a mandatory information required by IEC, UL and CSA standards (Copper conductors).
All other data are provided as supplementary information only. For more details, please consult our CB, UL or CSA certificates and technical datasheet available on http://www.TE.com

CE RoHS USR cCSAus Gost R

Accessories

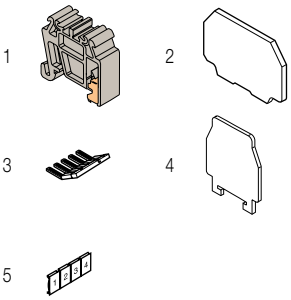

	Description			Color	Type	Part Number		Pkg pce	Weight (1 pce) g
1	**End stops**	6.5 mm	0.256 in	Grey	BADRL	1SNA199420R2100		50	2.00
2	**End sections**	1 mm	0.039 in	Grey	FEDR61	1SNA117600R0300		25	0.80
3	**Lateral jumper bars**	10 poles	35 A		PC61-10	1SNA163311R2200		10	5.00
4	**Circuit separators**	0.3 mm	0.012 in	White	SCDR61	1SNA173016R1000		25	0.40
5	**Terminal block markers**	Blank card		White	RC65	1SNA232000R0000		1	3.60

Complete list of accessories is indicated in the terminal block datasheet.
Some accessories such as jumper bars may modify the terminal block's ratings: complete information in the accessories catalogue pages.

Technical data valid for copper conductors only.

1SNC161050S0201 - Rev. A

DR2.5/5.S screw clamp terminal blocks

Miniblocks - 5.08 mm 0.200 in spacing

2.5 mm²

1SNC161307F0014

DR2.5/5.S

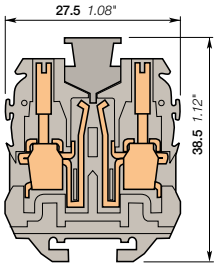

5.08 mm 0.200 in spacing

Description

- Save space with compact over-all dimensions terminal block,
- Ease your disconnect operations with the disconnect plug.

Ordering details

Description		Color	Type	Part Number		Pkg pce	Weight (1 pce) g
Miniblocks	Disconnect with 2 test sockets DIA 2 mm 0.079 in	Grey	DR2.5/5.S1	1SNA112098R1600		100	6.00

Main technical data

		IEC	UL	CSA
1 conductor per clamp	Rigid: Solid/Stranded	0.5-4 mm²		
	Flexible without ferrule	0.5-2.5 mm²		
	Flexible with insulated ferrule			
	Gauge			
Rated current / Rated cross section		3 A / 2.5 mm²		
Rated short-time withstand current (1s)		300 A		
Rated voltage		380 V		
Impulse withstand voltage				
Protection		IP20	NEMA 1	

Mounting instructions

Rail	TH 15-5.5
Wire stripping length	8.5 mm 0.335 in
Tool	Flat screwdriver Ø 3.5 mm Ø 0.138 in
Torque	0.4 - 0.6 Nm 3.5 - 5.3 lb.in

The connecting capacity data for one Rigid: Solid/Stranded, or one Flexible conductor (when applicable) is a mandatory information required by IEC, UL and CSA standards (Copper conductors). All other data are provided as supplementary information only. For more details, please consult our CB, UL or CSA certificates and technical datasheet available on http://www.TE.com

CE RoHS Gost R

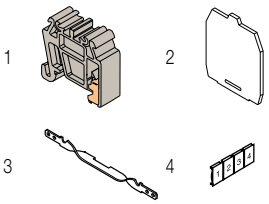

Accessories

	Description			Color	Type	Part Number		Pkg pce	Weight (1 pce) g
1	**End stops**	6.5 mm	0.256 in	Grey	BADRL	1SNA199420R2100		50	2.00
2	**End sections**	1 mm	0.039 in	Grey	FEDR51	1SNA117668R0200		25	1.00
3	**Shield connectors**				CBD5	1SNA167674R0200		25	
4	**Terminal block markers** Blank card			White	RC55	1SNA230000R1200		1	2.90

Complete list of accessories is indicated in the terminal block datasheet.
Some accessories such as jumper bars may modify the terminal block's ratings: complete information in the accessories catalogue pages.

Technical data valid for copper conductors only.

DR4/8.SF screw clamp terminal blocks

Miniblocks - 8 mm 0.315 in spacing

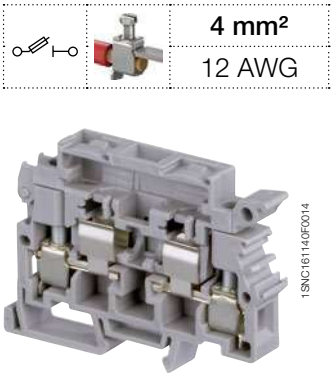

4 mm²	
12 AWG	

1SNC161140F0014

DR4/8.SF

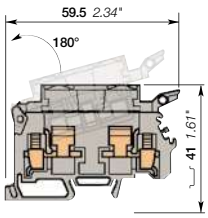

8 mm 0.315 in spacing

Description

- Save space with compact over-all dimensions terminal block,
- Protect your circuits with 5 x 20 and 5 x 25 fuse terminal blocks (fuse not supplied with terminal blocks).

Ordering details

Description		Color	Type	Part Number		Pkg pce	Weight (1 pce) g
Miniblocks	Fuse	Grey	DR4/8.SF	1SNA110368R1200		50	14.00

Main technical data

		IEC	UL	CSA
1 conductor per clamp	Rigid: Solid/Stranded	0.5-4 mm²		18 - 12 AWG
	Flexible without ferrule	0.5-4 mm²		
	Flexible with insulated ferrule			
	Gauge	A4		
Rated current / Rated cross section		6.3 A / 4 mm²		6.3 A / 12 AWG
Rated short-time withstand current (1s)		480 A		
Rated voltage		630 V		300 V
Impulse withstand voltage		8000 V		
Protection		IP20	NEMA 1	

Mounting instructions

Rail		TH 15-5.5
Wire stripping length		9.5 mm 0.37 in
Tool		Flat screwdriver Ø 4 mm Ø 0.157 in
Torque		0.5 - 0.8 Nm 4.4 - 7.1 lb.in

The connecting capacity data for one Rigid: Solid/Stranded, or one Flexible conductor (when applicable) is a mandatory information required by IEC, UL and CSA standards (Copper conductors). All other data are provided as supplementary information only. For more details, please consult our CB, UL or CSA certificates and technical datasheet available on http://www.TE.com

CE RoHS CSA Gost R

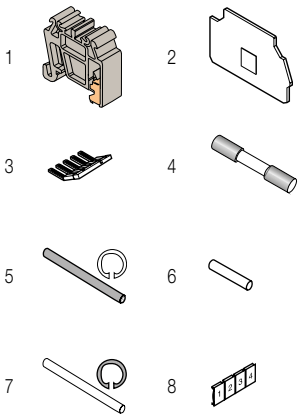

Accessories

	Description			Color	Type	Part Number		Pkg pce	Weight (1 pce) g
1	**End stops**	End stops	0.256 in	Grey	BADRL	1SNA199420R2100		50	2.00
2	**End sections**	1.5 mm	0.059 in	Grey	FEM8S	1SNA116951R1500		20	2.60
3	**Lateral jumper bars**	10 poles	35 A		PC81-10	1SNA173523R1100		10	5.00
4	**Fuses**	0.5 A			FU520	1SNA008288R1500		10	
		3.15 A				1SNA008289R1600		10	
		1 A				1SNA008290R1300		10	
		2 A				1SNA008291R0000		10	
		5 A				1SNA008292R0100		10	
5	**Assembly rods**	2 poles			TGA8	1SNA168672R1100		10	1.00
		3 poles				1SNA168673R1200		10	
		4 poles				1SNA168674R1300		10	
6	**Neutral cartridges**				CN5	1SNA179371R1600		10	3.90
7	**Spring retaining rings**				ANT	1SNA168675R1400		10	
8	**Terminal block markers**	Blank card		White	RC810	1SNA234000R0200		1	8.20

Complete list of accessories is indicated in the terminal block datasheet.
Some accessories such as jumper bars may modify the terminal block's ratings: complete information in the accessories catalogue pages.

1SNC161127S0201 - Rev. A

Technical data valid for copper conductors only.

DS2.5/5.2L spring terminal blocks
Miniblocks - 5 mm 0.197 in spacing

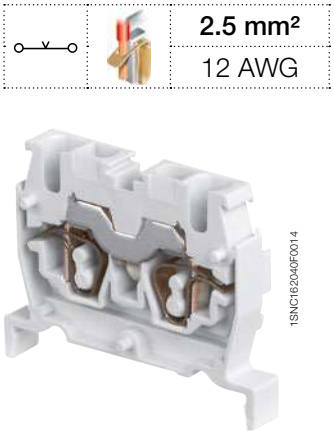

DS2.5/5.2L

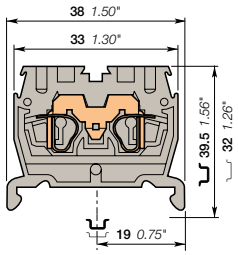

5 mm 0.197 in spacing

		2.5 mm²
		12 AWG

Description

- Save space with compact terminal blocks,
- Easy mounting on DIN rail TH35,
- Easy to access thanks to the front wiring entry,
- Clamping contact pressure non dependent on the operator and automatic creeping compensation.

Ordering details

Description		Color	Type	Part Number		Pkg pce	Weight (1 pce) g
Feed-through	2 connections	Grey	DS2.5/5.2L	1SNA290221R0400		100	4.00
		Blue	DS2.5/5.N.2L	1SNA290223R0600		100	4.00

Main technical data

		IEC	UL	CSA
1 conductor per clamp	Rigid: Solid/Stranded	0.12-4 mm²	26-12 AWG	
	Flexible without ferrule	0.12-2.5 mm²		
	Flexible with non insulated ferrule			
	Flexible with insulated ferrule	0.5-1.5 mm²		
	Gauge	A2		
Rated current / Rated cross section		24 A / 2.5 mm²	15 A / 12 AWG	
Rated short-time withstand current (1s)		300 A		
Rated voltage		800 V	600 V	
Impulse withstand voltage		8000 V		
Protection		IP20	NEMA 1	

Mounting instructions

Rail	TH 35-7.5, TH 35-15
Wire stripping length	9.5 mm 0.37 in
Tool	Flat screwdriver Ø 3.5 mm Ø 0.138 in

The connecting capacity data for one Rigid: Solid/Stranded, or one Flexible conductor (when applicable) is a mandatory information required by IEC, UL and CSA standards (Copper conductors). All other data are provided as supplementary information only. For more details, please consult our CB, UL or CSA certificates and technical datasheet available on http://www.TE.com

RoHS RoHS USR CNR Gost R

Notes

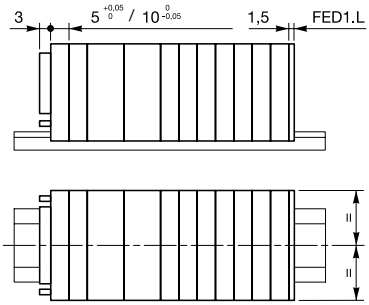

Accessories

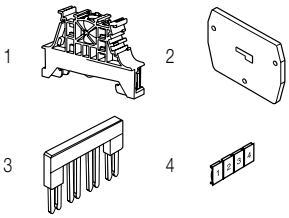

	Description			Color	Type	Part Number		Pkg pce	Weight (1 pce) g
1	**End stops**	5.2 mm	0.205 in	Dark grey	BAZ1	1SNK900002R0000		50	5.30
		10 mm	0.394 in		BAM4	1SNK900001R0000		50	14.00
2	**End sections**	1.5 mm	0.059 in	Grey	FED1.L	1SNA291301R0200		20	1.40
		4 mm	0.157 in		FED2.L	1SNA291311R2300		20	1.90
3	**Jumper bars**	2 poles	24 A	Orange	BJDL5-2	1SNA291102R2300		50	1.00
		3 poles			BJDL5-3	1SNA291103R2400		50	0.70
		4 poles			BJDL5-4	1SNA291104R2500		50	0.80
		5 poles			BJDL5-5	1SNA291105R2600		20	0.90
		10 poles			BJDL5-10	1SNA291110R2600		20	1.20
4	**Terminal block markers** Blank card			White	RC55	1SNA230000R1200		1	2.90

Complete list of accessories is indicated in the terminal block datasheet.
Some accessories such as jumper bars may modify the terminal block's ratings: complete information in the accessories catalogue pages.

Technical data valid for copper conductors only.

1SNC162090S0201 - Rev. B

DS2.5/10.4L spring terminal blocks
Miniblocks - 10 mm 0.394 in spacing

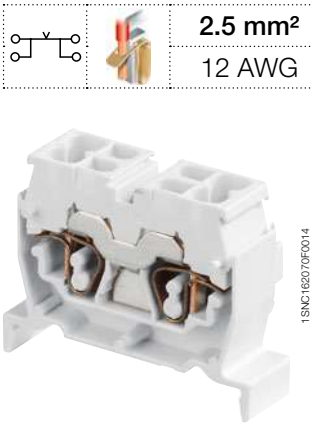

DS2.5/10.4L

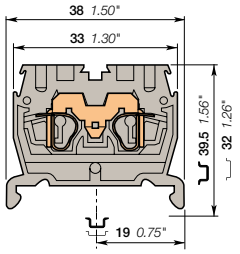

10 mm 0.394 in spacing

2.5 mm²
12 AWG

Description

- Save space with compact terminal blocks,
- Easy mounting on DIN rail TH35,
- Easy to access thanks to the front wiring entry,
- Clamping contact pressure non dependent on the operator and automatic creeping compensation.

Ordering details

Description		Color	Type	Part Number		Pkg pce	Weight (1 pce) g
Feed-through	4 connections	Grey	DS2.5/10.4L	1SNA290231R0600		100	6.00
		Blue	DS2.5/10.N.4L	1SNA290233R0000		100	6.00
		Yellow	DS2.5/10.4L.YL	1SNA290501R0000		100	6.00

Main technical data

		IEC	UL	CSA
1 conductor per clamp	Rigid: Solid/Stranded	0.12-4 mm²	26-12 AWG	
	Flexible without ferrule	0.12-2.5 mm²		
	Flexible with non insulated ferrule			
	Flexible with insulated ferrule	0.5-1.5 mm²		
	Gauge	A2		
Rated current / Rated cross section		24 A / 2.5 mm²	15 A / 12 AWG	
Rated short-time withstand current (1s)		300 A		
Rated voltage		800 V	600 V	
Impulse withstand voltage		8000 V		
Protection		IP20	NEMA 1	

Mounting instructions

Rail	TH 35-7.5, TH 35-15
Wire stripping length	9.5 mm 0.37 in
Tool	Flat screwdriver Ø 3.5 mm Ø 0.138 in

The connecting capacity data for one Rigid: Solid/Stranded, or one Flexible conductor (when applicable) is a mandatory information required by IEC, UL and CSA standards (Copper conductors). All other data are provided as supplementary information only. For more details, please consult our CB, UL or CSA certificates and technical datasheet available on http://www.TE.com

RoHS RoHS USR CNR Gost R

Notes

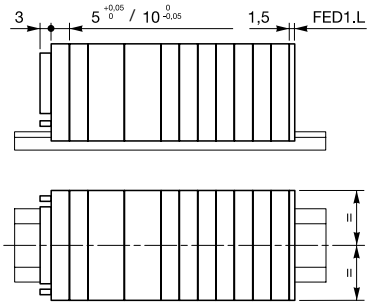

Accessories

	Description			Color	Type	Part Number		Pkg pce	Weight (1 pce) g
1	**End stops**	5.2 mm	0.205 in	Dark grey	BAZ1	1SNK900002R0000		50	5.30
		10 mm	0.394 in		BAM4	1SNK900001R0000		50	14.00
2	**End sections**	1.5 mm	0.059 in	Grey	FED1.L	1SNA291301R0200		20	1.40
		4 mm	0.157 in		FED2.L	1SNA291311R2300		20	1.90
3	**Jumper bars**	2 poles	24 A	Orange	BJDL10-2	1SNA291322R2600		50	1.00
		3 poles			BJDL10-3	1SNA291323R2700		50	1.00
		4 poles			BJDL10-4	1SNA291324R2000		20	2.00
		5 poles			BJDL10-5	1SNA291325R2100		20	2.00
4	**Terminal block markers** Blank card			White	RC55	1SNA230000R1200		1	2.90

1 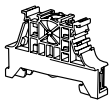
2 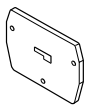
3 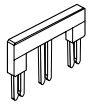
4

Complete list of accessories is indicated in the terminal block datasheet.
Some accessories such as jumper bars may modify the terminal block's ratings: complete information in the accessories catalogue pages.

Technical data valid for copper conductors only.

1SNC162091S0201 - Rev. B

DR2.5/5.2L spring terminal blocks
Miniblocks - 5 mm 0.197 in spacing

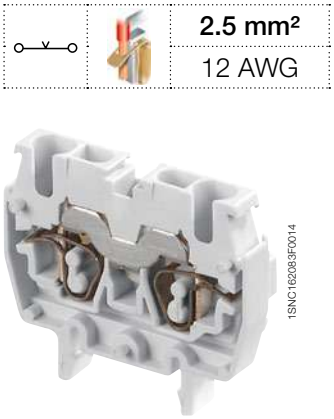

DR2.5/5.2L

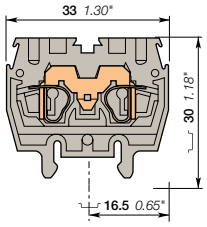

5 mm 0.197 in spacing

	2.5 mm²
	12 AWG

Description

- Save space with compact terminal blocks,
- Easy mounting on DIN rail TH15,
- Easy to access thanks to the front wiring entry,
- Clamping contact pressure non dependent on the operator and automatic creeping compensation.

Ordering details

Description		Color	Type	Part Number		Pkg pce	Weight (1 pce) g
Feed-through	2 connections	Grey	DR2.5/5.2L	1SNA290201R1100		100	4.00
		Blue	DR2.5/5.N.2L	1SNA290203R1300		100	4.00

Main technical data

		IEC	UL	CSA
1 conductor per clamp	Rigid: Solid/Stranded	0.12-4 mm²	26-12 AWG	
	Flexible without ferrule	0.12-2.5 mm²		
	Flexible with non insulated ferrule			
	Flexible with insulated ferrule	0.5-1.5 mm²		
	Gauge	A2		
Rated current / Rated cross section		24 A / 2.5 mm²	15 A / 12 AWG	
Rated short-time withstand current (1s)		300 A		
Rated voltage		800 V	600 V	
Impulse withstand voltage		8000 V		
Protection		IP20	NEMA 1	

The connecting capacity data for one Rigid: Solid/Stranded, or one Flexible conductor (when applicable) is a mandatory information required by IEC, UL and CSA standards (Copper conductors). All other data are provided as supplementary information only. For more details, please consult our CB, UL or CSA certificates and technical datasheet available on http://www.TE.com

RoHS RoHS · USR CNR · Gost R

Mounting instructions

Rail		TH 15-5.5
Wire stripping length		9.5 mm 0.37 in
Tool		Flat screwdriver Ø 3.5 mm Ø 0.138 in

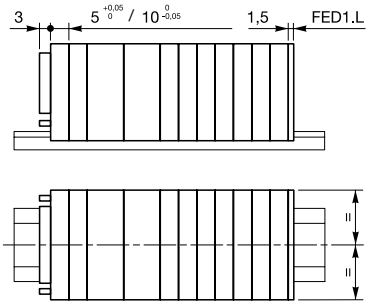

Accessories

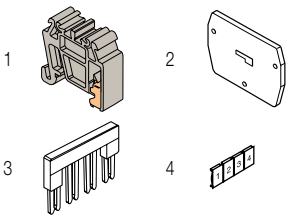

	Description			Color	Type	Part Number		Pkg pce	Weight (1 pce) g
1	**End stops**	6.5 mm	0.256 in	Grey	BADRL	1SNA199420R2100		50	2.00
2	**End sections**	1.5 mm	0.059 in	Grey	FED1.L	1SNA291301R0200		20	1.40
		4 mm	0.157 in		FED2.L	1SNA291311R2300		20	1.90
3	**Jumper bars**	2 poles	24 A	Orange	BJDL5-2	1SNA291102R2300		50	1.00
		3 poles			BJDL5-3	1SNA291103R2400		50	0.70
		4 poles			BJDL5-4	1SNA291104R2500		50	0.80
		5 poles			BJDL5-5	1SNA291105R2600		20	0.90
		10 poles			BJDL5-10	1SNA291110R2600		20	1.20
4	**Terminal block markers**	Blank card		White	RC55	1SNA230000R1200		1	2.90

Complete list of accessories is indicated in the terminal block datasheet.
Some accessories such as jumper bars may modify the terminal block's ratings: complete information in the accessories catalogue pages.

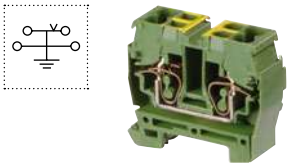

Ground spring terminal blocks

Description		Color	Type	Part Number		Pkg pce	Weight (1 pce) g
Ground	Profile aligned with DR2.5/...L	Green-yellow	DR2.5/10.P.4L	1SNA290219R1200		100	7.00

Technical data valid for copper conductors only.

DR2.5/10.4L spring terminal blocks

Miniblocks - 10 mm 0.394 in spacing

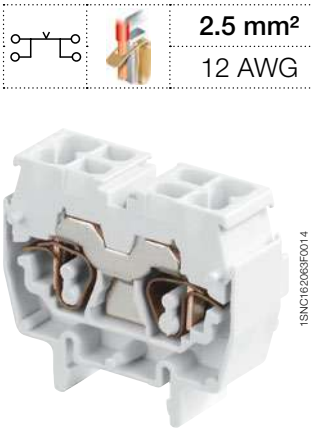

1SNC162063F0014

DR2.5/10.4L

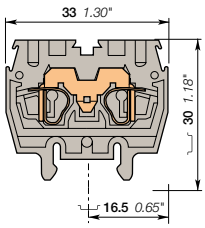

10 mm 0.394 in spacing

2.5 mm²

12 AWG

Description

- Save space with compact terminal blocks,
- Easy mounting on DIN rail TH15,
- Easy to access thanks to the front wiring entry,
- Clamping contact pressure non dependent on the operator and automatic creeping compensation.

Ordering details

Description		Color	Type	Part Number		Pkg pce	Weight (1 pce) g
Feed-through	4 connections	Grey	DR2.5/10.4L	1SNA290211R0200		100	6.00
		Blue	DR2.5/10.N.4L	1SNA290213R0400		100	6.00

Main technical data

		IEC	UL	CSA
1 conductor per clamp	Rigid: Solid/Stranded	0.12-4 mm²	26-12 AWG	
	Flexible without ferrule	0.12-2.5 mm²		
	Flexible with non insulated ferrule			
	Flexible with insulated ferrule	0.5-1.5 mm²		
	Gauge	A2		
Rated current / Rated cross section		24 A / 2.5 mm²	15 A / 12 AWG	
Rated short-time withstand current (1s)		300 A		
Rated voltage		800 V	600 V	
Impulse withstand voltage		8000 V		
Protection		IP20	NEMA 1	

Mounting instructions

Rail		TH 15-5.5
Wire stripping length		9.5 mm 0.37 in
Tool		Flat screwdriver Ø 3.5 mm Ø 0.138 in

The connecting capacity data for one Rigid: Solid/Stranded, or one Flexible conductor (when applicable) is a mandatory information required by IEC, UL and CSA standards (Copper conductors). All other data are provided as supplementary information only. For more details, please consult our CB, UL or CSA certificates and technical datasheet available on http://www.TE.com

RoHS RoHS USR CNR Gost R

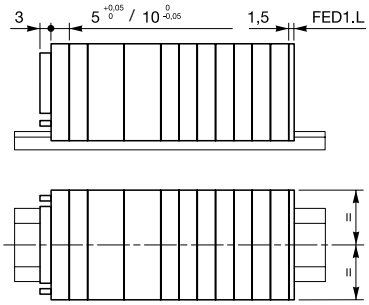

Accessories

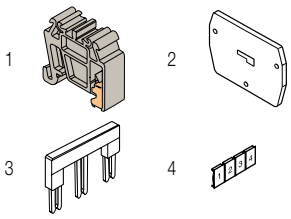

	Description			Color	Type	Part Number		Pkg pce	Weight (1 pce) g
1	**End stops**	6.5 mm	0.256 in	Grey	BADRL	1SNA199420R2100		50	2.00
2	**End sections**	1.5 mm	0.059 in	Grey	FED1.L	1SNA291301R0200		20	1.40
		4 mm	0.157 in		FED2.L	1SNA291311R2300		20	1.90
3	**Jumper bars**	2 poles	24 A	Orange	BJDL10-2	1SNA291322R2600		50	1.00
		3 poles			BJDL10-3	1SNA291323R2700		50	1.00
		4 poles			BJDL10-4	1SNA291324R2000		20	2.00
		5 poles			BJDL10-5	1SNA291325R2100		20	2.00
4	**Terminal block markers** Blank card			White	RC55	1SNA230000R1200		1	2.90

Complete list of accessories is indicated in the terminal block datasheet.
Some accessories such as jumper bars may modify the terminal block's ratings: complete information in the accessories catalogue pages.

Ground spring terminal blocks

Description		Color	Type	Part Number		Pkg pce	Weight (1 pce) g
Ground	Profile aligned with DR2.5/...L	Green-yellow	DR2.5/10.P.4L	1SNA290219R1200		100	7.00

Technical data valid for copper conductors only.

1SNC162093S0201 - Rev. B

DR2.5/10.P.4L spring terminal blocks

Miniblocks - 10 mm 0.394 in spacing

2.5 mm²

12 AWG

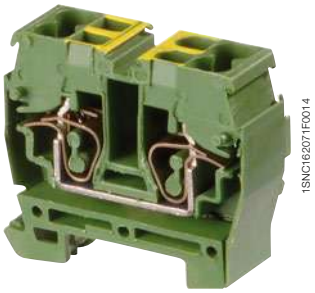

1SNC162071F0014

DR2.5/10.P.4L

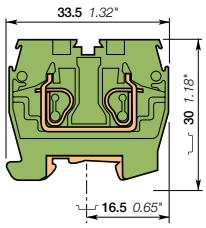

10 mm 0.394 in spacing

Description

- Save space with compact terminal blocks,
- Easy mounting on DIN rail TH15,
- Easy to access thanks to the front wiring entry,
- Clamping contact pressure non dependent on the operator and automatic creeping compensation.

Ordering details

Description		Color	Type	Part Number		Pkg pce	Weight (1 pce) g
Ground	Screwless rail connection	Green-yellow	DR2.5/10.P.4L	1SNA290219R1200		100	7.00

Main technical data

		IEC	UL	CSA
1 conductor per clamp	Rigid: Solid/Stranded	0.12-4 mm²		
	Flexible without ferrule	0.12-2.5 mm²		
	Flexible with non insulated ferrule			
	Flexible with insulated ferrule	0.5-1.5 mm²		
	Gauge	A2		
Rated cross section		2.5 mm²		
Rated short-time withstand current (1s)		300 A		
Protection		IP20	NEMA 1	

Mounting instructions

Rail		TH 15-5.5
Wire stripping length		9.5 mm 0.37 in
Tool		Flat screwdriver Ø 3.5 mm Ø 0.138 in

The connecting capacity data for one Rigid: Solid/Stranded, or one Flexible conductor (when applicable) is a mandatory information required by IEC, UL and CSA standards (Copper conductors). All other data are provided as supplementary information only. For more details, please consult our CB, UL or CSA certificates and technical datasheet available on http://www.TE.com

RoHS RoHS Gost R

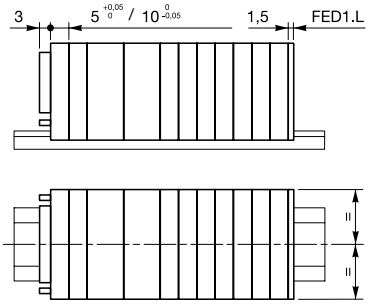

Accessories

	Description			Color	Type	Part Number		Pkg pce	Weight (1 pce) g
1	**End stops**	6.5 mm	0.256 in	Grey	BADRL	1SNA199420R2100		50	2.00
2	**End sections**	1.5 mm	0.059 in	Grey	FED1.L	1SNA291301R0200		20	1.40
3	**Terminal block markers**	Blank card		White	RC55	1SNA230000R1200		1	2.90

1 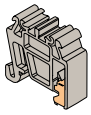

2 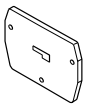

3

Complete list of accessories is indicated in the terminal block datasheet.
Some accessories such as jumper bars may modify the terminal block's ratings: complete information in the accessories catalogue pages.

Technical data valid for copper conductors only.

1SNC162094S0201 - Rev. B

DB2.5/5.2L spring terminal blocks
Miniblocks - 5 mm 0.197 in spacing

DB2.5/5.2L

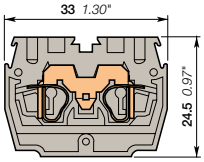

5 mm 0.197 in spacing

	2.5 mm²
	12 AWG

Description

- Save space with compact terminal blocks,
- Easy base mounting thanks to the usage of flanges,
- Easy to access thanks to the front wiring entry,
- Clamping contact pressure non dependent on the operator and automatic creeping compensation.

Ordering details

Description		Color	Type	Part Number		Pkg pce	Weight (1 pce) g
Feed-through	2 connections	Grey	DB2.5/5.2L	1SNA290241R1000		100	4.00
		Blue	DB2.5/5.N.2L	1SNA290243R1200		100	4.00

Main technical data

		IEC	UL	CSA
1 conductor per clamp	Rigid: Solid/Stranded	0.12-4 mm²	26-12 AWG	
	Flexible without ferrule	0.12-2.5 mm²		
	Flexible with non insulated ferrule			
	Flexible with insulated ferrule	0.5-1.5 mm²		
	Gauge	A2		
Rated current / Rated cross section		24 A / 2.5 mm²	15 A / 12 AWG	
Rated short-time withstand current (1s)		300 A		
Rated voltage		800 V	600 V	
Impulse withstand voltage		8000 V		
Protection		IP20	NEMA 1	

Mounting instructions

Rail		
Wire stripping length		9.5 mm 0.37 in
Tool		Flat screwdriver Ø 3.5 mm Ø 0.138 in

The connecting capacity data for one Rigid: Solid/Stranded, or one Flexible conductor (when applicable) is a mandatory information required by IEC, UL and CSA standards (Copper conductors). All other data are provided as supplementary information only. For more details, please consult our CB, UL or CSA certificates and technical datasheet available on http://www.TE.com

RoHS RoHS | USR CNR | Gost R

Notes

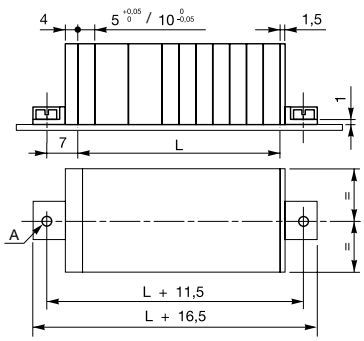

L = (N blocks x 5.05) + (N blocks x 10)

A: 2 holes DIA 3.2 mm for 3 mm screw with cylindrical head (not supplied)

Accessories

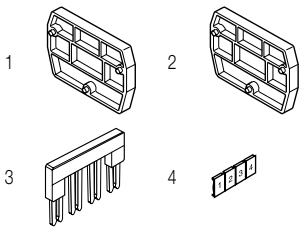

	Description			Color	Type	Part Number		Pkg pce	Weight (1 pce) g
1	**End section kits**			Grey	FEDB.L	1SNA290281R0100		20	3.00
2	**End sections**	4 mm	0.157 in	Grey	FED2.L	1SNA291311R2300		20	1.90
3	**Jumper bars**	2 poles	24 A	Orange	BJDL5-2	1SNA291102R2300		50	1.00
		3 poles			BJDL5-3	1SNA291103R2400		50	0.70
		4 poles			BJDL5-4	1SNA291104R2500		50	0.80
		5 poles			BJDL5-5	1SNA291105R2600		20	0.90
		10 poles			BJDL5-10	1SNA291110R2600		20	1.20
4	**Terminal block markers** Blank card			White	RC55	1SNA230000R1200		1	2.90

Complete list of accessories is indicated in the terminal block datasheet.
Some accessories such as jumper bars may modify the terminal block's ratings: complete information in the accessories catalogue pages.

Technical data valid for copper conductors only.

1SNC162095S0201 - Rev. B

DH2.5/5.2L spring terminal blocks

Miniblocks - 5 mm 0.197 in spacing

DH2.5/5.2L

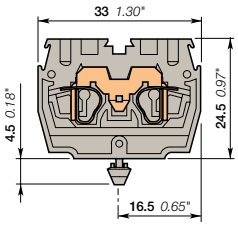

5 mm 0.197 in spacing

	2.5 mm²
	12 AWG

Description

- Save space with compact terminal blocks,
- Easy base mounting thanks to snap in mounting foot,
- Clamping contact pressure non dependent on the operator and automatic creeping compensation.

Ordering details

Description		Color	Type	Part Number		Pkg pce	Weight (1 pce) g
Feed-through	2 connections	Grey	DH2.5/5.2L	1SNA290261R1400		100	4.00

Main technical data

		IEC	UL	CSA
1 conductor per clamp	Rigid: Solid/Stranded	0.12-4 mm²	26-12 AWG	
	Flexible without ferrule	0.12-2.5 mm²		
	Flexible with non insulated ferrule			
	Flexible with insulated ferrule	0.5-1.5 mm²		
	Gauge	A2		
Rated current / Rated cross section		24 A / 2.5 mm²	15 A / 12 AWG	
Rated short-time withstand current (1s)		300 A		
Rated voltage		800 V	600 V	
Impulse withstand voltage		8000 V		
Protection		IP20	NEMA 1	

The connecting capacity data for one Rigid: Solid/Stranded, or one Flexible conductor (when applicable) is a mandatory information required by IEC, UL and CSA standards (Copper conductors). All other data are provided as supplementary information only. For more details, please consult our CB, UL or CSA certificates and technical datasheet available on http://www.TE.com

RoHS RoHS | USR CNR | Gost R

Mounting instructions

Rail		
Wire stripping length		9.5 mm 0.37 in
Tool		Flat screwdriver Ø 3.5 mm Ø 0.138 in

Notes

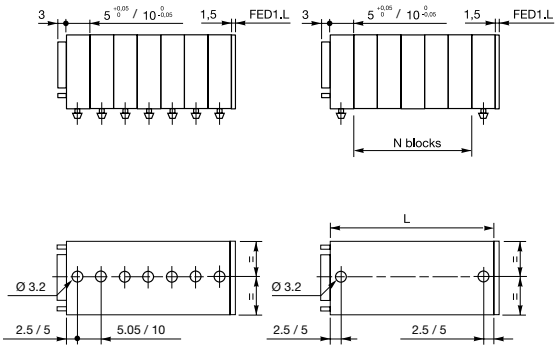

For 10 mm blocks, mount a DH block every 4 blocks.
For 5 mm blocks, mount a DH block every 8 blocks.

N blocks = 8 blocks max with 5 mm spacing
N blocks = 4 blocks max with 10 mm spacing

L = (N blocks x 5.05) + (N blocks x 10)
Panel thickness: 0.6 to 1.2 mm 0.024 to 0.047 in

Accessories

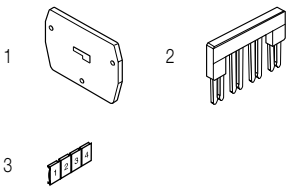

	Description			Color	Type	Part Number		Pkg pce	Weight (1 pce) g
1	**End sections**	1.5 mm	0.059 in	Grey	FED1.L	1SNA291301R0200		20	1.40
		4 mm	0.157 in		FED2.L	1SNA291311R2300		20	1.90
2	**Jumper bars**	2 poles	24 A	Orange	BJDL5-2	1SNA291102R2300		50	1.00
		3 poles			BJDL5-3	1SNA291103R2400		50	0.70
		4 poles			BJDL5-4	1SNA291104R2500		50	0.80
		5 poles			BJDL5-5	1SNA291105R2600		20	0.90
		10 poles			BJDL5-10	1SNA291110R2600		20	1.20
3	**Terminal block markers** Blank card			White	RC55	1SNA230000R1200		1	2.90

Complete list of accessories is indicated in the terminal block datasheet.
Some accessories such as jumper bars may modify the terminal block's ratings: complete information in the accessories catalogue pages.

Technical data valid for copper conductors only.

DS2.5/5.ADO IDC terminal blocks

Miniblocks ADO - screw clamp - 5 mm 0.197 in spacing

DS2.5/5.ADO

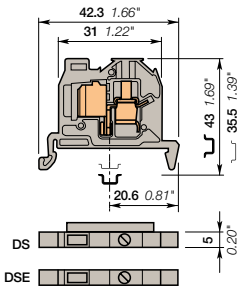

5 mm 0.197 in spacing

1 mm²
18 AWG

Description

- The mini blocks are particularly designed for applications where space is very restricted,
- With the TE Connectivity ADO System®, experience the fastest and most reliable connection on the market,
- This solution brings all the benefits of the ADO System® and allows installators to connect on standard screw clamp,
- Up to 2 wires per connection in the ADO System® connection.

Ordering details

Description		Color	Type	Part Number		Pkg pce	Weight (1 pce) g
Feed-through	With rib	Grey	DS2.5/5.ADO	1SNA399514R2300		100	4.00
	Without rib for TB assembly extremity	Grey	DSE2.5/5.ADO	1SNA399518R0700		20	4.00

Main technical data

		IEC	UL	CSA
ADO	Rigid: Solid/Stranded	0.2-1 mm²	24-18 AWG	
	Flexible without ferrule	0.22-1 mm²		
Screw clamp	Rigid: Solid/Stranded	0.2-4 mm²	24-12 AWG	
	Flexible without ferrule	0.22-2.5 mm²		
	Flexible with insulated ferrule			
	Gauge	A3		
Rated current / Rated cross section		13.5 A / 1 mm²	10 A / 18 AWG	
Rated short-time withstand current (1s)		120 A		
Rated voltage		800 V	600 V	
Impulse withstand voltage		8000 V		
Protection		IP20	NEMA 1	

Mounting instructions

Rail	TH 35-7.5, TH 35-15
Wire stripping length	9.5 mm 0.37 in
Tool	Flat screwdriver Ø 3.5 mm Ø 0.138 in
Torque	0.4 - 0.6 N.m 3.5 - 5.3 lb.in

The connecting capacity data for one Rigid: Solid/Stranded, or one Flexible conductor (when applicable) is a mandatory information required by IEC, UL and CSA standards (Copper conductors). All other data are provided as supplementary information only. For more details, please consult our CB, UL or CSA certificates and technical datasheet available on http://www.TE.com

RoHS — USR CNR — Gost R

Notes

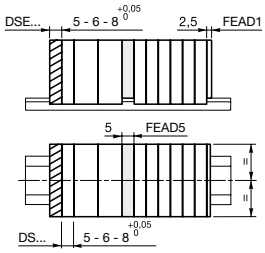

- End section FEAD1 to be mounted directly on the open part of the terminal block.
- End terminal block DSE has to be mounted at the end of the terminal blocks assembly: it reduces its size, because it suppresses the insulation rib (- 4 mm).
- Nota: This terminal block cannot be accidently located anywhere else into the terminal block assembly (without locking holes)
- Separator FEAD5 which snaps on the terminal blocks, separates and makes visible the different parts of the terminal blocks assembly.

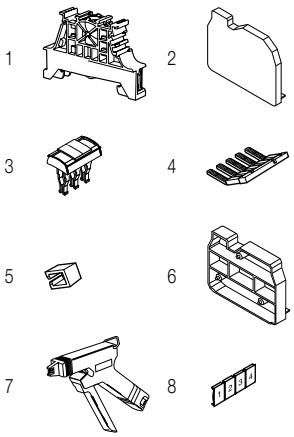

Accessories

	Description			Color	Type	Part Number		Pkg pce	Weight (1 pce) g
1	**End stops**	10 mm	0.394 in	Dark grey	BAM4	1SNK900001R0000		50	14.00
		5.2 mm	0.205 in		BAZ1	1SNK900002R0000		50	5.30
2	**End sections**	2.5 mm	0.098 in	Grey	FEAD1	1SNA199421R1600		20	1.30
3	**Jumper bars**	2 poles	13.5 A	Orange	BJADO5-2	1SNA205955R0300		20	1.00
		3 poles			BJADO5-3	1SNA205956R0400		20	1.00
		10 poles			BJADO5-10	1SNA205963R0300		10	5.00
4	**Lateral jumper bars**	2 poles	30 A	Grey	PC5-2	1SNA113542R1000		10	1.80
		10 poles			PC5-10	1SNA113544R1200		10	6.00
5	**Insulating tips**	For lateral jumper bars type PC...			EIP	1SNA113550R2400		10	
6	**Circuit separators**	5 mm	0.197 in	Grey	FEAD5	1SNA199433R1200		20	1.80
7	**Tools**	Semi automatic tool			OUPAD	1SNA178944R0400		1	205.00
		Hand tool			OUMAD	1SNA179466R0600		1	29.00
8	**Terminal block markers**	Blank card		White	RC55	1SNA230000R1200		1	2.90

Complete list of accessories is indicated in the terminal block datasheet.
Some accessories such as jumper bars may modify the terminal block's ratings: complete information in the accessories catalogue pages.

Technical data valid for copper conductors only.

DS4/6.ADO IDC terminal blocks

Miniblocks ADO - screw clamp - 6 mm 0.236 in spacing

1.5 mm²
16 AWG

1SNC163080F0014

DS4/6.ADO

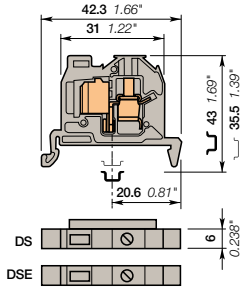

6 mm 0.236 in spacing

Description

- The mini blocks are particularly designed for applications where space is very restricted,
- With the TE Connectivity ADO System®, experience the fastest and most reliable connection on the market,
- This solution brings all the benefits of the ADO System® and allows installators to connect on standard screw clamp,
- Up to 2 wires per connection in the ADO System® connection.

Ordering details

Description		Color	Type	Part Number		Pkg pce	Weight (1 pce) g
Feed-through	With rib	Grey	DS4/6.ADO	1SNA299489R0700		100	5.00
	Without rib for TB assembly extremity	Grey	DSE4/6.ADO	1SNA299556R0100		20	5.00

Main technical data

		IEC	UL	CSA
ADO	Rigid: Solid/Stranded	0.28-1.5 mm²	22-16 AWG	
	Flexible without ferrule	0.34-1.5 mm²		
Screw clamp	Rigid: Solid/Stranded	0.2-4 mm²	22-10 AWG	
	Flexible without ferrule	0.22-4 mm²		
	Flexible with insulated ferrule			
	Gauge	A4		
Rated current / Rated cross section		17.5 A / 1.5 mm²	20 A / 16 AWG	
Rated short-time withstand current (1s)		180 A		
Rated voltage		800 V	600 V	
Impulse withstand voltage				
Protection		IP20	NEMA 1	

Mounting instructions

Rail	TH 35-7.5, TH 35-15
Wire stripping length	9.5 mm 0.37 in
Tool	Flat screwdriver Ø 4 mm Ø 0.157 in
Torque	0.5 - 0.8 N.m 4.4 - 7.1 lb.in

The connecting capacity data for one Rigid: Solid/Stranded, or one Flexible conductor (when applicable) is a mandatory information required by IEC, UL and CSA standards (Copper conductors). All other data are provided as supplementary information only. For more details, please consult our CB, UL or CSA certificates and technical datasheet available on http://www.TE.com

RoHS RoHS · USR CNR · Gost R

Notes

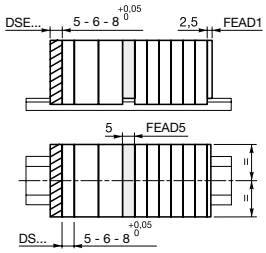

- End section FEAD1 to be mounted directly on the open part of the terminal block.
- End terminal block DSE has to be mounted at the end of the terminal blocks assembly: it reduces its size, because it suppresses the insulation rib (- 4 mm).
- Nota: This terminal block cannot be accidently located anywhere else into the terminal block assembly (without locking holes)
- Separator FEAD5 which snaps on the terminal blocks, separates and makes visible the different parts of the terminal blocks assembly.

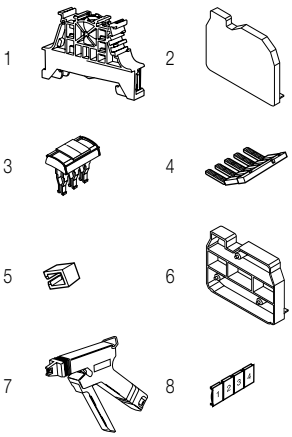

Accessories

	Description			Color	Type	Part Number		Pkg pce	Weight (1 pce) g
1	**End stops**	10 mm	0.394 in	Dark grey	BAM4	1SNK900001R0000		50	14.00
		5.2 mm	0.205 in		BAZ1	1SNK900002R0000		50	5.30
2	**End sections**	2.5 mm	0.098 in	Grey	FEAD1	1SNA199421R1600		20	1.30
3	**Jumper bars**	2 poles	17.5 A	Orange	BJADO6-2	1SNA205974R0600		20	1.00
		3 poles			BJADO6-3	1SNA205975R0700		20	1.00
		10 poles			BJADO6-10	1SNA205982R2700		10	6.00
4	**Lateral jumper bars**	2 poles	35 A	Grey	PC6-2	1SNA113546R1400		10	2.00
		3 poles			PC6-3	1SNA116536R0500		10	2.00
		4 poles			PC6-4	1SNA116537R0600		10	1.00
		10 poles			PC6-10	1SNA113548R2600		10	8.00
5	**Insulating tips**	For lateral jumper bars type PC...			EIP	1SNA113550R2400		10	
6	**Circuit separators**	5 mm	0.197 in	Grey	FEAD5	1SNA199433R1200		20	1.80
7	**Tools**	Semi automatic tool			OUPAD	1SNA178944R0400		1	205.00
		Hand tool			OUMAD	1SNA179466R0600		1	29.00
8	**Terminal block Markers**	Blank card		White	RC65	1SNA232000R0000		1	3.60

Complete list of accessories is indicated in the terminal block datasheet.
Some accessories such as jumper bars may modify the terminal block's ratings: complete information in the accessories catalogue pages.

Technical data valid for copper conductors only.

1SNC163028S0201 - Rev. A

DS4/8.ADO IDC terminal blocks

Miniblocks ADO - screw clamp - 8 mm 0.315 in spacing

DS4/8.ADO

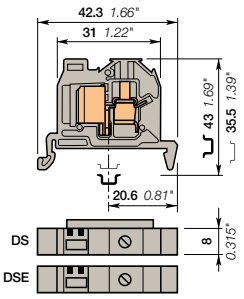

8 mm 0.315 in spacing

2.5 mm²
14 AWG

Description

- The mini blocks are particularly designed for applications where space is very restricted,
- With the TE Connectivity ADO System®, experience the fastest and most reliable connection on the market,
- This solution brings all the benefits of the ADO System® and allows installators to connect on standard screw clamp,
- Up to 2 wires per connection in the ADO System® connection.

Ordering details

Description		Color	Type	Part Number		Pkg pce	Weight (1 pce) g
Feed-through	With rib and 2 notches for wire size 1-2.5 mm² (16-14 AWG)	Grey	DS4/8.ADO	1SNA299493R2300		100	7.00
	Without rib for TB assembly extremity and 2 notches for wire size 1-2.5 mm² (16-14 AWG)	Grey	DSE4/8.ADO	1SNA299557R0200		20	7.00

Main technical data

		IEC	UL	CSA
ADO	Rigid: Solid/Stranded	1-2.5 mm²	16-14 AWG	
	Flexible without ferrule	1-2.5 mm²		
Screw clamp	Rigid: Solid/Stranded	0.2-4 mm²	22-10 AWG	
	Flexible without ferrule	0.22-4 mm²		
	Flexible with insulated ferrule			
	Gauge	A4		
Rated current / Rated cross section		24 A / 2.5 mm²	25 A / 14 AWG	
Rated short-time withstand current (1s)		300 A		
Rated voltage		1000 V	600 V	
Impulse withstand voltage				
Protection		IP20	NEMA 1	

The connecting capacity data for one Rigid: Solid/Stranded, or one Flexible conductor (when applicable) is a mandatory information required by IEC, UL and CSA standards (Copper conductors). All other data are provided as supplementary information only. For more details, please consult our CB, UL or CSA certificates and technical datasheet available on http://www.TE.com

RoHS RoHS | USR CNR | Gost R

Mounting instructions

Rail	TH 35-7.5, TH 35-15
Wire stripping length	9.5 mm 0.37 in
Tool	Flat screwdriver Ø 4 mm Ø 0.157 in
Torque	0.5 - 0.8 N.m 4.4 - 7.1 lb.in

Notes

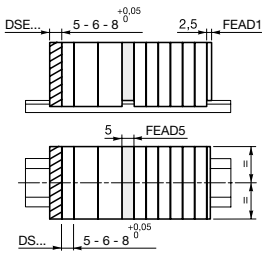

- End section FEAD1 to be mounted directly on the open part of the terminal block.
- End terminal block DSE has to be mounted at the end of the terminal blocks assembly: it reduces its size, because it suppresses the insulation rib (- 4 mm).
- Nota: This terminal block cannot be accidently located anywhere else into the terminal block assembly (without locking holes)
- Separator FEAD5 which snaps on the terminal blocks, separates and makes visible the different parts of the terminal blocks assembly.

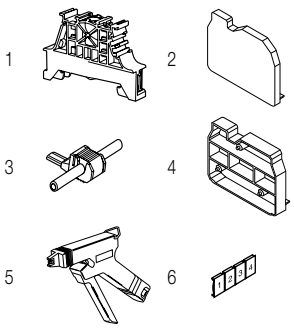

Accessories

	Description			Color	Type	Part Number		Pkg pce	Weight (1 pce) g
1	**End stops**	10 mm	0.394 in	Dark grey	BAM4	1SNK900001R0000		50	14.00
		5.2 mm	0.205 in		BAZ1	1SNK900002R0000		50	5.30
2	**End sections**	2.5 mm	0.098 in	Grey	FEAD1	1SNA199421R1600		20	1.30
3	**Jumper bars**	1 poles	24 A	Grey	AD2.5	1SNA114205R2000		50	1.60
4	**Circuit separators**	5 mm	0.197 in	Grey	FEAD5	1SNA199433R1200		20	1.80
5	**Tools**	Semi automatic tool			OUPAD	1SNA178944R0400		1	205.00
		Hand tool			OUMAD	1SNA179466R0600		1	29.00
6	**Terminal block markers**	Blank card			RCAL85	1SNA237000R0500		1	2.90

Complete list of accessories is indicated in the terminal block datasheet.
Some accessories such as jumper bars may modify the terminal block's ratings: complete information in the accessories catalogue pages.

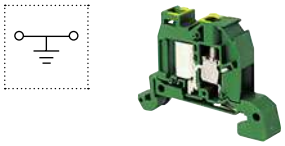

Ground IDC terminal blocks

Description		Color	Type	Part Number		Pkg pce	Weight (1 pce) g
Ground	Profile aligned with DS4/8.ADO	Green-yellow	DS4/8.P.ADO	1SNA199527R1000		100	8.00

Technical data valid for copper conductors only.

6

1SNC163029S0201 - Rev. A

DS4/8.P.ADO IDC terminal blocks

Miniblocks ADO - screw clamp - 8 mm 0.315 in spacing

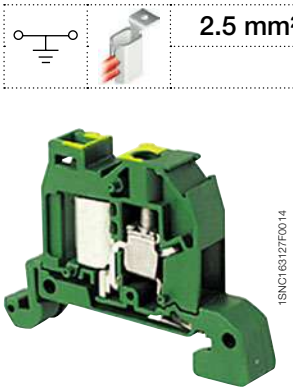

DS4/8.P.ADO

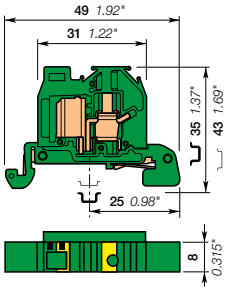

8 mm 0.315 in spacing

Description

- The mini blocks are particularly designed for applications where space is very restricted,
- Protect your installation in the event of a short-circuit thanks to our screwless rail contact non operator dependent,
- Secure mounting or removal from the rail,
- This solution brings all the benefits of the ADO System® and allows installators to connect on standard screw clamp,
- Up to 2 wires per connection in the ADO System® connection.

Ordering details

Description		Color	Type	Part Number		Pkg pce	Weight (1 pce) g
Ground	With 2 notches for wire size 1-2.5 mm² (16-14 AWG)	Green-yellow	DS4/8.P.ADO	1SNA199527R1000		100	8.00

Main technical data

		IEC	UL	CSA
ADO	Rigid: Solid/Stranded	1-2.5 mm²		
	Flexible without ferrule			
Screw clamp	Rigid: Solid/Stranded	0.2-4 mm²		
	Flexible without ferrule			
	Flexible with insulated ferrule			
	Gauge	A4		
Rated cross section		2.5 mm²		
Rated short-time withstand current (1s)		300 A		
Protection		IP20	NEMA 1	

Mounting instructions

Rail		TH 35-7.5, TH 35-15
Wire stripping length		9.5 mm 0.37 in
Tool		Flat screwdriver Ø 4 mm Ø 0.157 in
Torque		0.5 - 0.8 N.m 4 - 7.1 lb.in

The connecting capacity data for one Rigid: Solid/Stranded, or one Flexible conductor (when applicable) is a mandatory information required by IEC, UL and CSA standards (Copper conductors). All other data are provided as supplementary information only. For more details, please consult our CB, UL or CSA certificates and technical datasheet available on http://www.TE.com

RoHS RoHS | Gost R

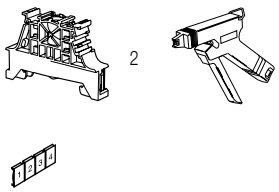

Accessories

	Description			Color	Type	Part Number		Pkg pce	Weight (1 pce) g
1	**End stops**	10 mm	0.394 in	Dark grey	BAM4	1SNK900001R0000		50	14.00
		5.2 mm	0.205 in		BAZ1	1SNK900002R0000		50	5.30
2	**Tools**	Semi automatic tool			OUPAD	1SNA178944R0400		1	205.00
		Hand tool			OUMAD	1SNA179466R0600		1	29.00
3	**Terminal block markers**	Blank card			RCAL85	1SNA237000R0500		1	2.90

Complete list of accessories is indicated in the terminal block datasheet.
Some accessories such as jumper bars may modify the terminal block's ratings: complete information in the accessories catalogue pages.

Technical data valid for copper conductors only.

1SNC163030S0201 - Rev. A

DR2.5/5.ADO IDC terminal blocks

Miniblocks ADO - screw clamp - 5 mm 0.197 in spacing

DR2.5/5.ADO

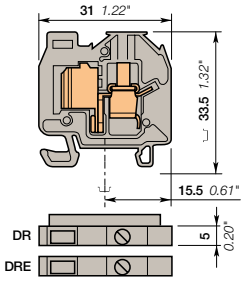

5 mm 0.197 in spacing

1 mm²
18 AWG

Description

- The mini blocks are particularly designed for applications where space is very restricted,
- With the TE Connectivity ADO System®, experience the fastest and most reliable connection on the market,
- This solution brings all the benefits of the ADO System® and allows installators to connect on standard screw clamp,
- Up to 2 wires per connection in the ADO System® connection.

Ordering details

Description		Color	Type	Part Number		Pkg pce	Weight (1 pce) g
Feed-through	With rib	Grey	DR2.5/5.ADO	1SNA399509R1700		100	4.00
	Without rib for TB assembly extremity	Grey	DRE2.5/5.ADO	1SNA399513R2200		20	4.00

Main technical data

		IEC	UL	CSA
ADO	Rigid: Solid/Stranded	0.2-1 mm²	24-18 AWG	
	Flexible without ferrule	0.22-1 mm²		
Screw clamp	Rigid: Solid/Stranded	0.2-4 mm²	24-12 AWG	
	Flexible without ferrule	0.22-2.5 mm²		
	Flexible with insulated ferrule			
	Gauge	A3		
Rated current / Rated cross section		13.5 A / 1 mm²	10 A / 18 AWG	
Rated short-time withstand current (1s)		120 A		
Rated voltage		800 V	600 V	
Impulse withstand voltage		8000 V		
Protection		IP20	NEMA 1	

Mounting instructions

Rail	TH 15-5.5
Wire stripping length	9.5 mm 0.374 in
Tool	Flat screwdriver Ø 3.5 mm Ø 0.138 in
Torque	0.4 - 0.6 N.m 3.5 - 5.3 lb.in

The connecting capacity data for one Rigid: Solid/Stranded, or one Flexible conductor (when applicable) is a mandatory information required by IEC, UL and CSA standards (Copper conductors). All other data are provided as supplementary information only. For more details, please consult our CB, UL or CSA certificates and technical datasheet available on http://www.TE.com

RoHS RoHS · USR CNR · Gost R

Notes

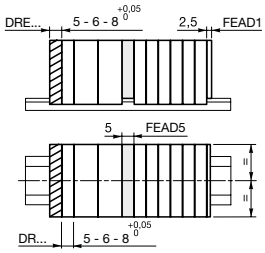

- End section FEAD1 to be mounted directly on the open part of the terminal block.
- End terminal block DRE has to be mounted at the end of the terminal blocks assembly: it reduces its size, because it suppresses the insulation rib (- 4 mm).
- Nota: This terminal block cannot be accidently located anywhere else into the terminal block assembly (without locking holes)
- Separator FEAD5 which snaps on the terminal blocks, separates and makes visible the different parts of the terminal blocks assembly.

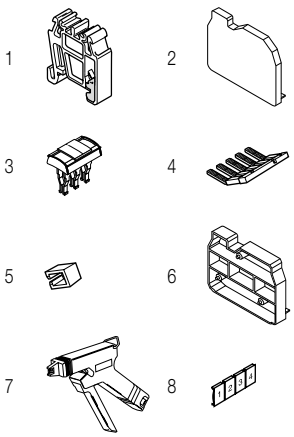

Accessories

	Description			Color	Type	Part Number		Pkg pce	Weight (1 pce) g
1	**End stops**	6.5 mm	0.256 in	Grey	BADRL	1SNA199420R2100		50	2.00
2	**End sections**	2.5 mm	0.098 in	Grey	FEAD1	1SNA199421R1600		20	1.30
3	**Jumper bars**	2 poles	13.5 A	Orange	BJADO5-2	1SNA205955R0300		20	1.00
		3 poles			BJADO5-3	1SNA205956R0400		20	1.00
		10 poles			BJADO5-10	1SNA205963R0300		10	5.00
4	**Lateral jumper bars**	2 poles	30 A	Grey	PC5-2	1SNA113542R1000		10	1.80
		10 poles			PC5-10	1SNA113544R1200		10	6.00
5	**Insulating tips**	For lateral jumper bars type PC...			EIP	1SNA113550R2400		10	
6	**Circuit separators**	5 mm	0.197 in	Grey	FEAD5	1SNA199433R1200		20	1.80
7	**Tools**	Semi automatic tool			OUPAD	1SNA178944R0400		1	205.00
		Hand tool			OUMAD	1SNA179466R0600		1	29.00
8	**Terminal block markers**	Blank card		White	RC55	1SNA230000R1200		1	2.90

Complete list of accessories is indicated in the terminal block datasheet.
Some accessories such as jumper bars may modify the terminal block's ratings: complete information in the accessories catalogue pages.

Technical data valid for copper conductors only.

1SNC163031S0201 - Rev. A

DR4/6.ADO IDC terminal blocks

Miniblocks ADO - screw clamp - 6 mm 0.236 in spacing

1SNC163073F0014

DR4/6.ADO

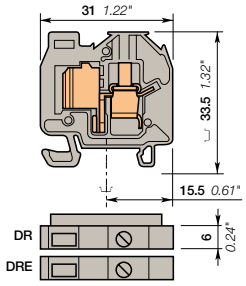

6 mm 0.236 in spacing

Description

- The mini blocks are particularly designed for applications where space is very restricted,
- With the TE Connectivity ADO System®, experience the fastest and most reliable connection on the market,
- This solution brings all the benefits of the ADO System® and allows installators to connect on standard screw clamp,
- Up to 2 wires per connection in the ADO System® connection.

Ordering details

Description		Color	Type	Part Number		Pkg pce	Weight (1 pce) g
Feed-through	With rib	Grey	DR4/6.ADO	1SNA199275R0300		100	5.00
	Without rib for TB assembly extremity	Grey	DRE4/6.ADO	1SNA299552R0500		20	5.00

Main technical data

		IEC	UL	CSA
ADO	Rigid: Solid/Stranded	0.28-1.5 mm²	22-16 AWG	
	Flexible without ferrule	0.34-1.5 mm²		
Screw clamp	Rigid: Solid/Stranded	0.2-4 mm²	22-10 AWG	
	Flexible without ferrule	0.22-4 mm²		
	Flexible with insulated ferrule			
	Gauge	A4		
Rated current / Rated cross section		17.5 A / 1.5 mm²	20 A / 16 AWG	
Rated short-time withstand current (1s)		180 A		
Rated voltage		800 V	600 V	
Impulse withstand voltage		8000 V		
Protection		IP20	NEMA 1	

Mounting instructions

Rail		TH 15-5.5
Wire stripping length		9.5 mm 0.374 in
Tool		Flat screwdriver Ø 4 mm Ø 0.157 in
Torque		0.5 - 0.8 N.m 4.4 - 7.1 lb.in

The connecting capacity data for one Rigid: Solid/Stranded, or one Flexible conductor (when applicable) is a mandatory information required by IEC, UL and CSA standards (Copper conductors). All other data are provided as supplementary information only. For more details, please consult our CB, UL or CSA certificates and technical datasheet available on http://www.TE.com

RoHS RoHS · USR CNR · Gost R

Notes

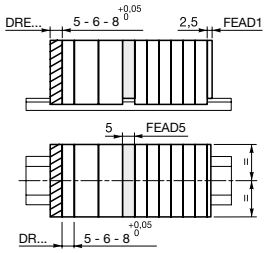

- End section FEAD1 to be mounted directly on the open part of the terminal block.
- End terminal block DRE has to be mounted at the end of the terminal blocks assembly: it reduces its size, because it suppresses the insulation rib (- 4 mm).
- Nota: This terminal block cannot be accidently located anywhere else into the terminal block assembly (without locking holes)
- Separator FEAD5 which snaps on the terminal blocks, separates and makes visible the different parts of the terminal blocks assembly.

Accessories

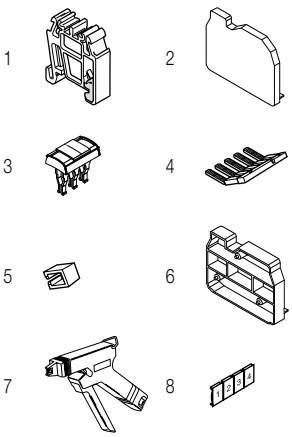

	Description			Color	Type	Part Number		Pkg pce	Weight (1 pce) g
1	**End stops**	6.5 mm	0.256 in	Grey	BADRL	1SNA199420R2100		50	2.00
2	**End sections**	2.5 mm	0.098 in	Grey	FEAD1	1SNA199421R1600		20	1.30
3	**Jumper bars**	2 poles	17.5 A	Orange	BJADO6-2	1SNA205974R0600		20	1.00
		3 poles			BJADO6-3	1SNA205975R0700		20	1.00
		10 poles			BJADO6-10	1SNA205982R2700		10	6.00
4	**Lateral jumper bars**	2 poles	35 A	Grey	PC6-2	1SNA113546R1400		10	2.00
		3 poles			PC6-3	1SNA116536R0500		10	2.00
		4 poles			PC6-4	1SNA116537R0600		10	1.00
		10 poles			PC6-10	1SNA113548R2600		10	8.00
5	**Insulating tips**	For lateral jumper bars type PC...			EIP	1SNA113550R2400		10	
6	**Circuit separators**	5 mm	0.197 in	Grey	FEAD5	1SNA199433R1200		20	1.80
7	**Tools**	Semi automatic tool			OUPAD	1SNA178944R0400		1	205.00
		Hand tool			OUMAD	1SNA179466R0600		1	29.00
8	**Terminal block markers**	Blank card		White	RC65	1SNA232000R0000		1	3.60

Complete list of accessories is indicated in the terminal block datasheet.
Some accessories such as jumper bars may modify the terminal block's ratings: complete information in the accessories catalogue pages.

Technical data valid for copper conductors only.

1SNC163032S0201 - Rev. A

DR4/8.ADO IDC terminal blocks

Miniblocks ADO - screw clamp - 8 mm 0.315 in spacing

DR4/8.ADO

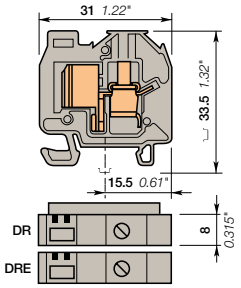

8 mm 0.315 in spacing

	2.5 mm²
	14 AWG

Description

- The mini blocks are particularly designed for applications where space is very restricted,
- With the TE Connectivity ADO System®, experience the fastest and most reliable connection on the market,
- This solution brings all the benefits of the ADO System® and allows installators to connect on standard screw clamp,
- Up to 2 wires per connection in the ADO System® connection.

Ordering details

Description		Color	Type	Part Number		Pkg pce	Weight (1 pce) g
Feed-through	With rib and 2 notches for wire size 1-2.5 mm² (16-14 AWG)	Grey	DR4/8.ADO	1SNA199279R1700		100	7.00

Main technical data

		IEC	UL	CSA
ADO	Rigid: Solid/Stranded	1-2.5 mm²	16-14 AWG	
	Flexible without ferrule	1-2.5 mm²		
Screw clamp	Rigid: Solid/Stranded	0.2-4 mm²	22-10 AWG	
	Flexible without ferrule	0.22-4 mm²		
	Flexible with insulated ferrule			
	Gauge	A4		
Rated current / Rated cross section		24 A / 2.5 mm²	25 A / 14 AWG	
Rated short-time withstand current (1s)		300 A		
Rated voltage		1000 V	600 V	
Impulse withstand voltage		8000 V		
Protection		IP20	NEMA 1	

Mounting instructions

Rail	TH 15-5.5
Wire stripping length	9.5 mm 0.374 in
Tool	Flat screwdriver Ø 4 mm Ø 0.157 in
Torque	0.5 - 0.8 N.m 4.4 - 7.1 lb.in

The connecting capacity data for one Rigid: Solid/Stranded, or one Flexible conductor (when applicable) is a mandatory information required by IEC, UL and CSA standards (Copper conductors). All other data are provided as supplementary information only. For more details, please consult our CB, UL or CSA certificates and technical datasheet available on http://www.TE.com

RoHS USR CNR Gost R

Notes

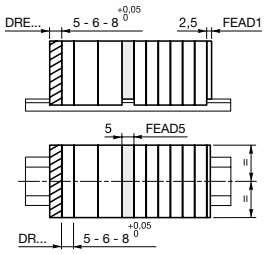

- End section FEAD1 to be mounted directly on the open part of the terminal block.
- End terminal block DRE has to be mounted at the end of the terminal blocks assembly: it reduces its size, because it suppresses the insulation rib (- 4 mm).
- Nota: This terminal block cannot be accidently located anywhere else into the terminal block assembly (without locking holes)
- Separator FEAD5 which snaps on the terminal blocks, separates and makes visible the different parts of the terminal blocks assembly.

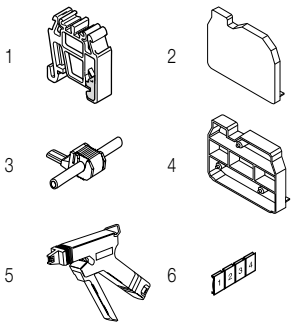

Accessories

	Description			Color	Type	Part Number		Pkg pce	Weight (1 pce) g
1	**End stops**	6.5 mm	0.256 in	Grey	BADRL	1SNA199420R2100		50	2.00
2	**End sections**	2.5 mm	0.098 in	Grey	FEAD1	1SNA199421R1600		20	1.30
3	**Jumper bars**	1 poles	24 A	Grey	AD2.5	1SNA114205R2000		50	1.60
4	**Circuit separators**	5 mm	0.197 in	Grey	FEAD5	1SNA199433R1200		20	1.80
5	**Tools**	Semi automatic tool			OUPAD	1SNA178944R0400		1	205.00
		Hand tool			OUMAD	1SNA179466R0600		1	29.00
6	**Terminal block markers**	Blank card			RCAL85	1SNA237000R0500		1	2.90

Complete list of accessories is indicated in the terminal block datasheet.
Some accessories such as jumper bars may modify the terminal block's ratings: complete information in the accessories catalogue pages.

Ground IDC terminal blocks

Description		Color	Type	Part Number		Pkg pce	Weight (1 pce) g
Ground	Profile aligned with DR4/8.ADO	Green-yellow	DR4/8.P.ADO	1SNA299632R0500		100	8.00

Technical data valid for copper conductors only.

1SNC163033S0201 - Rev. A

DR4/8.P.ADO IDC Terminal Blocks

Miniblocks ADO - screw clamp - 8 mm 0.315 in Spacing

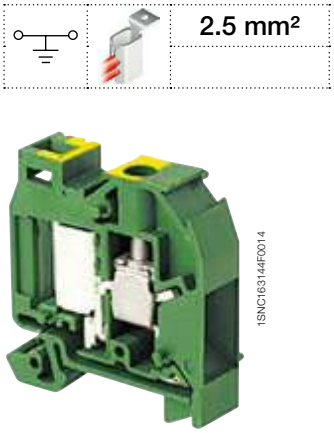

DR4/8.P.ADO

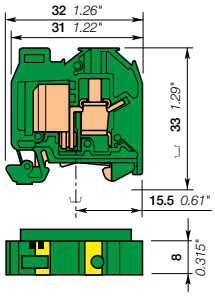

8 mm 0.315 in Spacing

2.5 mm²

Description

- The mini blocks are particularly designed for applications where space is very restricted,
- Protect your installation in the event of a short-circuit thanks to our screwless rail contact non operator dependent,
- Secure mounting or removal from the rail,
- This solution brings all the benefits of the ADO System® and allows installators to connect on standard screw clamp,
- Up to 2 wires per connection in the ADO System® connection.

Ordering Details

Description		Color	Type	Part Number		Pkg pce	Weight (1 pce) g
Ground	Ground with 2 notches for wire size 1-2.5 mm² (16-14 AWG)	Green-Yellow	DR4/8.P.ADO	1SNA299632R0500		100	8.00

Main Technical Data

		IEC	UL	CSA
ADO	Rigid: Solid/Stranded	1-2.5 mm²		
	Flexible without ferrule	1-2.5 mm²		
Screw clamp	Rigid: Solid/Stranded	0.2-4 mm²		
	Flexible without ferrule	0.22-4 mm²		
	Flexible with insulated ferrule			
	Gauge	A4		
Rated cross section		2.5 mm²		
Rated short-time withstand current (1s)		300 A		
Protection			NEMA	

Mounting Instructions

Rail	TH 15-5.5
Wire stripping length	9.5 mm 0.374 in
Tool	Flat screwdriver Ø 4 mm Ø 0.157 in
Torque	0.5 - 0.8 N.m 4.4 - 7.1 lb.in

The connecting capacity data for one Rigid: Solid/Stranded, or one Flexible conductor (when applicable) is a mandatory information required by IEC, UL and CSA standards (Copper conductors). All other data are provided as supplementary information only. For more details, please consult our CB, UL or CSA certificates and technical datasheet available on http://www.TE.com

RoHS RoHS Gost R

Accessories

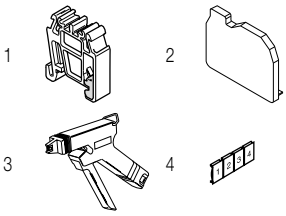

	Description			Color	Type	Part Number		Pkg pce	Weight (1 pce) g
1	**End Stops**	6.5 mm	0.256 in	Grey	BADRL	1SNA199420R2100		50	2.00
2	**End Sections**	2.5 mm	0.098 in	Grey	FEAD1	1SNA199421R1600		20	1.30
3	**Tools**	Semi automatic tool			OUPAD	1SNA178944R0400		1	205.00
		Hand tool			OUMAD	1SNA179466R0600		1	29.00
4	**Terminal block markers**	Blank card			RCAL85	1SNA237000R0500		1	2.90

Complete list of accessories is indicated in the terminal block datasheet.
Some accessories such as jumper bars may modify the terminal block's ratings: complete information in the accessories catalogue pages.

Technical data valid for copper conductors only.

DB2.5/5.ADO IDC terminal blocks

Miniblocks ADO - screw clamp - 5 mm 0.197 in spacing

DB2.5/5.ADO

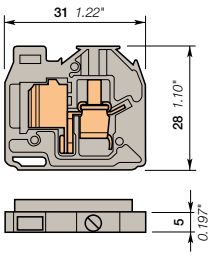

5 mm 0.197 in spacing

	1 mm²
	18 AWG

Description

- The mini blocks are particularly designed for applications where space is very restricted,
- With the TE Connectivity ADO System®, experience the fastest and most reliable connection on the market,
- This solution brings all the benefits of the ADO System® and allows installators to connect on standard screw clamp,
- Easy base mounting thanks to the usage of flanges,
- Up to 2 wires per connection in the ADO System® connection.

Ordering details

Description	Color	Type	Part Number		Pkg pce	Weight (1 pce) g
Feed-through	Grey	DB2.5/5.ADO	1SNA399519R0000		100	4.00

Main technical data

		IEC	UL	CSA
ADO	Rigid: Solid/Stranded	0.2-1 mm²	24-18 AWG	
	Flexible without ferrule	0.22-1 mm²		
Screw clamp	Rigid: Solid/Stranded	0.2-4 mm²	24-12 AWG	
	Flexible without ferrule	0.22-2.5 mm²		
	Flexible with insulated ferrule			
	Gauge	A3		
Rated current / Rated cross section		13.5 A / 1 mm²	10 A / 18 AWG	
Rated short-time withstand current (1s)		120 A		
Rated voltage		800 V	600 V	
Impulse withstand voltage		8000 V		
Protection		IP20	NEMA 1	

Mounting instructions

Rail		
Wire stripping length		9.5 mm 0.374 in
Tool		Flat screwdriver Ø 3.5 mm Ø 0.138 in
Torque		0.4 - 0.6 N.m 3.5 - 5.3 lb.in

The connecting capacity data for one Rigid: Solid/Stranded, or one Flexible conductor (when applicable) is a mandatory information required by IEC, UL and CSA standards (Copper conductors). All other data are provided as supplementary information only. For more details, please consult our CB, UL or CSA certificates and technical datasheet available on http://www.TE.com

RoHS RoHS · USR CNR · Gost R

Notes

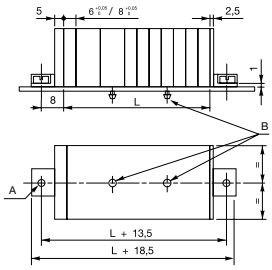

A: 2 holes DIA 3.2 mm for 3 mm screw max. with cylindrical head (not supplied).

L = (N blocks x 6) + (N blocks x 8)

Plate thickness 0.6 to 1.2 mm

Intermediate mounting of DH blocks every 2 blocks (spacing 8 mm) or 3 blocks (spacing 6 mm)

Accessories

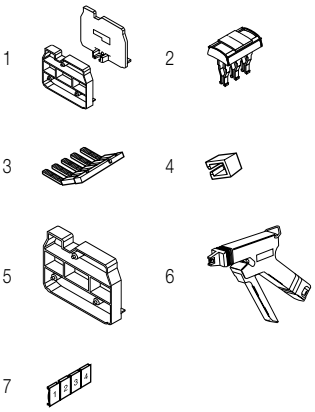

	Description			Color	Type	Part Number		Pkg pce	Weight (1 pce) g
1	**End section kits**			Grey	FEAD3	1SNA199437R1600		20	3.00
2	**Jumper bars**	2 poles	13.5 A	Orange	BJADO5-2	1SNA205955R0300		20	1.00
		3 poles			BJADO5-3	1SNA205956R0400		20	1.00
		10 poles			BJADO5-10	1SNA205963R0300		10	5.00
3	**Lateral jumper bars**	2 poles	30 A	Grey	PC5-2	1SNA113542R1000		10	1.80
		10 poles			PC5-10	1SNA113544R1200		10	6.00
4	**Insulating tips**	For lateral jumper bars type PC...			EIP	1SNA113550R2400		10	
5	**Circuit separators**	5 mm	0.197 in	Grey	FEAD5	1SNA199433R1200		20	1.80
6	**Tools**	Semi automatic tool			OUPAD	1SNA178944R0400		1	205.00
		Hand tool			OUMAD	1SNA179466R0600		1	29.00
7	**Terminal block markers**	Blank card		White	RC55	1SNA230000R1200		1	2.90

Complete list of accessories is indicated in the terminal block datasheet.
Some accessories such as jumper bars may modify the terminal block's ratings: complete information in the accessories catalogue pages.

Technical data valid for copper conductors only.

1SNC163035S0201 - Rev. A

DB4/6.ADO IDC terminal blocks

Miniblocks ADO - screw clamp - 6 mm 0.236 in spacing

1.5 mm²
16 AWG

DB4/6.ADO

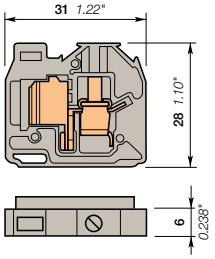

6 mm 0.236 in spacing

Description

- The mini blocks are particularly designed for applications where space is very restricted,
- With the TE Connectivity ADO System®, experience the fastest and most reliable connection on the market,
- This solution brings all the benefits of the ADO System® and allows installators to connect on standard screw clamp,
- Easy base mounting thanks to the usage of flanges,
- Up to 2 wires per connection in the ADO System® connection.

Ordering details

Description	Color	Type	Part Number		Pkg pce	Weight (1 pce) g
Feed-through	Grey	DB4/6.ADO	1SNA299505R0700		100	5.00

Main technical data

		IEC	UL	CSA
ADO	Rigid: Solid/Stranded	0.28-1.5 mm²	22-16 AWG	
	Flexible without ferrule	0.34-1.5 mm²	22-16 AWG	
Screw clamp	Rigid: Solid/Stranded	0.2-4 mm²	22-10 AWG	
	Flexible without ferrule	0.22-4 mm²		
	Flexible with insulated ferrule			
	Gauge	A4		
Rated current / Rated cross section		17.5 A / 1.5 mm²	20 A / 16 AWG	
Rated short-time withstand current (1s)		180 A		
Rated voltage		800 V	600 V	
Impulse withstand voltage		8000 V		
Protection		IP20	NEMA 1	

Mounting instructions

Rail		
Wire stripping length		9.5 mm 0.374 in
Tool		Flat screwdriver Ø 4 mm Ø 0.157 in
Torque		0.5 - 0.8 N.m 4.4 - 7.1 lb.in

The connecting capacity data for one Rigid: Solid/Stranded, or one Flexible conductor (when applicable) is a mandatory information required by IEC, UL and CSA standards (Copper conductors). All other data are provided as supplementary information only. For more details, please consult our CB, UL or CSA certificates and technical datasheet available on http://www.TE.com

RoHS / USR CNR / cCSAus / Gost R

Notes

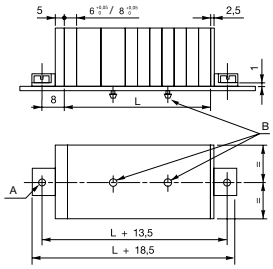

A: 2 holes DIA 3.2 mm for 3 mm screw max. with cylindrical head (not supplied)

L = (N blocks x 6) + (N blocks x 8)

Plate thickness 0.6 to 1.2 mm

Intermediate mounting of DH blocks every 2 blocks (spacing 8 mm) or 3 blocks (spacing 6 mm)

Accessories

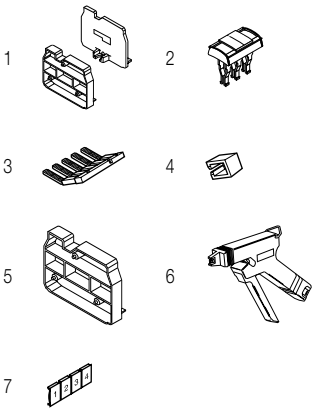

	Description			Color	Type	Part Number		Pkg pce	Weight (1 pce) g
1	End section kits			Grey	FEAD3	1SNA199437R1600		20	3.00
2	Jumper bars	2 poles	17.5 A	Orange	BJADO6-2	1SNA205974R0600		20	1.00
		3 poles			BJADO6-3	1SNA205975R0700		20	1.00
		10 poles			BJADO6-10	1SNA205982R2700		10	6.00
3	Lateral jumper bars	2 poles	35 A	Grey	PC6-2	1SNA113546R1400		10	2.00
		3 poles			PC6-3	1SNA116536R0500		10	2.00
		4 poles			PC6-4	1SNA116537R0600		10	1.00
		10 poles			PC6-10	1SNA113548R2600		10	8.00
4	Insulating tips	For lateral jumper bars type PC...			EIP	1SNA113550R2400		10	
5	Circuit separators	5 mm	0.197 in	Grey	FEAD5	1SNA199433R1200		20	1.80
6	Tools	Semi automatic tool			OUPAD	1SNA178944R0400		1	205.00
		Hand tool			OUMAD	1SNA179466R0600		1	29.00
7	Terminal block markers	Blank card		White	RC65	1SNA232000R0000		1	3.60

Complete list of accessories is indicated in the terminal block datasheet.
Some accessories such as jumper bars may modify the terminal block's ratings: complete information in the accessories catalogue pages.

Technical data valid for copper conductors only.

1SNC163036S0201 - Rev. A

DB4/8.ADO IDC terminal blocks

Miniblocks ADO - screw clamp - 8 mm 0.315 in spacing

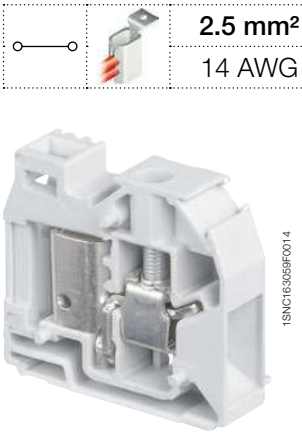

2.5 mm²
14 AWG

1SNC163059F0014

DB4/8.ADO

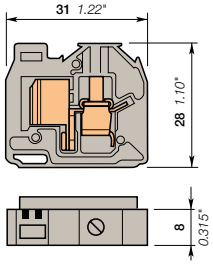

8 mm 0.315 in spacing

Description

- The mini blocks are particularly designed for applications where space is very restricted,
- With the TE Connectivity ADO System®, experience the fastest and most reliable connection on the market,
- This solution brings all the benefits of the ADO System® and allows installators to connect on standard screw clamp,
- Easy base mounting thanks to the usage of flanges,
- Up to 2 wires per connection in the ADO System® connection.

Ordering details

Description		Color	Type	Part Number		Pkg pce	Weight (1 pce) g
Feed-through	With 2 notches for wire size 1-2.5 mm² (16-14 AWG)	Grey	DB4/8.ADO	1SNA299509R1300		100	7.00

Main technical data

		IEC	UL	CSA
ADO	Rigid: Solid/Stranded	1-2.5 mm²	16-14 AWG	
	Flexible without ferrule	1-2.5 mm²		
Screw clamp	Rigid: Solid/Stranded	0.2-4 mm²	22-10 AWG	
	Flexible without ferrule	0.22-4 mm²		
	Flexible with insulated ferrule			
	Gauge	A4		
Rated current / Rated cross section		24 A / 2.5 mm²	25 A / 14 AWG	
Rated short-time withstand current (1s)		300 A		
Rated voltage		800 V	600 V	
Impulse withstand voltage		8000 V		
Protection		IP20	NEMA 1	

Mounting instructions

Rail		
Wire stripping length		9.5 mm 0.374 in
Tool		Flat screwdriver Ø 4 mm Ø 0.157 in
Torque		0.5 - 0.8 N.m 4.4 - 7.1 lb.in

The connecting capacity data for one Rigid: Solid/Stranded, or one Flexible conductor (when applicable) is a mandatory information required by IEC, UL and CSA standards (Copper conductors). All other data are provided as supplementary information only. For more details, please consult our CB, UL or CSA certificates and technical datasheet available on http://www.TE.com

RoHS — RoHS; USR CNR; Gost R

Notes

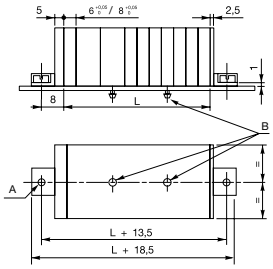

A: 2 holes DIA 3.2 mm for 3 mm screw max. with cylindrical head (not supplied)

L = (N blocks x 6) + (N blocks x 8)

Plate thickness 0.6 to 1.2 mm

Intermediate mounting of DH blocks every 2 blocks (spacing 8 mm) or 3 blocks (spacing 6 mm)

Accessories

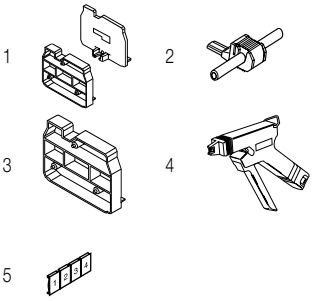

	Description			Color	Type	Part Number		Pkg pce	Weight (1 pce) g
1	**End section kits**			Grey	FEAD3	1SNA199437R1600		20	3.00
2	**Jumper bars**	1 poles	24 A	Grey	AD2.5	1SNA114205R2000		50	1.60
3	**Circuit separators**	5 mm	0.197 in	Grey	FEAD5	1SNA199433R1200		20	1.80
4	**Tools**	Semi automatic tool			OUPAD	1SNA178944R0400		1	205.00
		Hand tool			OUMAD	1SNA179466R0600		1	29.00
5	**Terminal block markers**	Blank card			RCAL85	1SNA237000R0500		1	2.90

Complete list of accessories is indicated in the terminal block datasheet.
Some accessories such as jumper bars may modify the terminal block's ratings: complete information in the accessories catalogue pages.

Technical data valid for copper conductors only.

1SNC163037S0201 - Rev. A

DH4/6.ADO IDC terminal blocks

Miniblocks ADO - screw clamp - 6 mm 0.236 in spacing

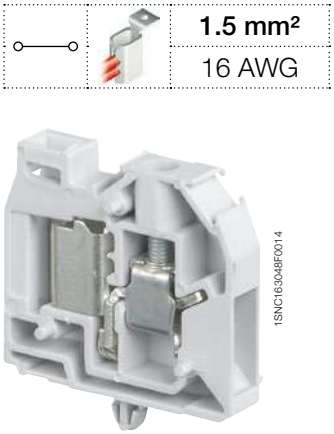

DH4/6.ADO

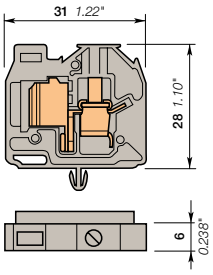

6 mm 0.236 in spacing

Description

- The mini blocks are particularly designed for applications where space is very restricted,
- With the TE Connectivity ADO System®, experience the fastest and most reliable connection on the market,
- This solution brings all the benefits of the ADO System® and allow installators to connect on standard screw clamp,
- Easy base mounting thanks to snap in mounting foot,
- Up to 2 wires per connection in the ADO System® connection.

Ordering details

Description	Color	Type	Part Number		Pkg pce	Weight (1 pce) g
Feed-through	Grey	DH4/6.ADO	1SNA299521R2600		100	5.00

Main technical data

		IEC	UL	CSA
ADO	Rigid: Solid/Stranded	0.28-1.5 mm²	22-16 AWG	
	Flexible without ferrule	0.34-1.5 mm²		
Screw clamp	Rigid: Solid/Stranded	0.2-4 mm²	22-10 AWG	
	Flexible without ferrule	0.22-4 mm²		
	Flexible with insulated ferrule			
	Gauge	A4		
Rated current / Rated cross section		17.5 A / 1.5 mm²	20 A / 16 AWG	
Rated short-time withstand current (1s)		180 A		
Rated voltage		800 V	600 V	
Impulse withstand voltage		8000 V		
Protection		IP20	NEMA 1	

Mounting instructions

Rail		
Wire stripping length		9.5 mm 0.374 in
Tool		Flat screwdriver Ø 4 mm Ø 0.157 in
Torque		0.5 - 0.8 N.m 4.4 - 7.1 lb.in

The connecting capacity data for one Rigid: Solid/Stranded, or one Flexible conductor (when applicable) is a mandatory information required by IEC, UL and CSA standards (Copper conductors). All other data are provided as supplementary information only. For more details, please consult our CB, UL or CSA certificates and technical datasheet available on http://www.TE.com

RoHS / USR CNR / Gost R

Notes

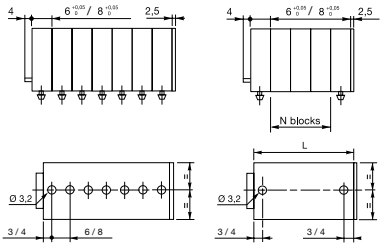

L = (N blocks x 6) + (N blocks x 8)

N blocks = 3 blocks max. with 6 mm spacing
2 blocks max. with 8 mm spacing

Plate thickness 0.6 to 1.2 mm

Accessories

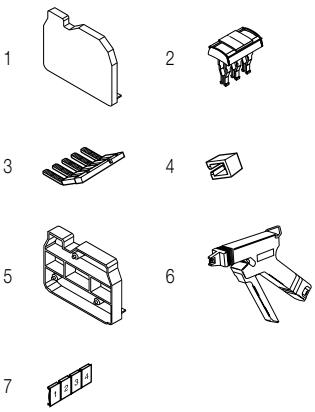

	Description			Color	Type	Part Number		Pkg pce	Weight (1 pce) g
1	End section			Grey	FEAD1	1SNA199421R1600		20	1.30
2	Jumper bars	2 poles	17.5 A	Orange	BJADO6-2	1SNA205974R0600		20	1.00
		3 poles			BJADO6-3	1SNA205975R0700		20	1.00
		10 poles			BJADO6-10	1SNA205982R2700		10	6.00
3	Lateral jumper bars	2 poles	35 A	Grey	PC6-2	1SNA113546R1400		10	2.00
		3 poles			PC6-3	1SNA116536R0500		10	2.00
		4 poles			PC6-4	1SNA116537R0600		10	1.00
		10 poles			PC6-10	1SNA113548R2600		10	8.00
4	Insulating tips	For lateral jumper bars type PC...			EIP	1SNA113550R2400		10	
5	Circuit separators	5 mm	0.197 in	Grey	FEAD5	1SNA199433R1200		20	1.80
6	Tools	Semi automatic tool			OUPAD	1SNA178944R0400		1	205.00
		Hand tool			OUMAD	1SNA179466R0600		1	29.00
7	Terminal block markers	Blank card		White	RC65	1SNA232000R0000		1	3.60

Complete list of accessories is indicated in the terminal block datasheet.
Some accessories such as jumper bars may modify the terminal block's ratings: complete information in the accessories catalogue pages.

Technical data valid for copper conductors only.

1SNC163038S0201 - Rev. A

DS1.5/6.ADO IDC terminal blocks

Miniblocks ADO-ADO - 6 mm 0.236 in spacing

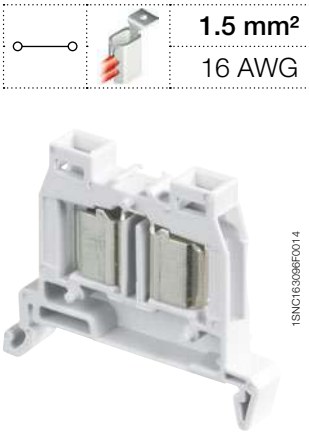

DS1.5/6.ADO

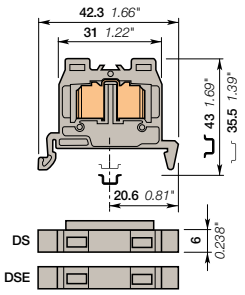

6 mm 0.236 in spacing

	1.5 mm²
	16 AWG

Description

- The mini blocks are particularly designed for applications where space is very restricted,
- With the TE Connectivity ADO System®, experience the fastest and most reliable connection on the market,
- Designed for control applications exposed to severe constrains (vibrations, shocks, corrosion etc.),
- Up to 2 wires per connection.

Ordering details

Description		Color	Type	Part Number		Pkg pce	Weight (1 pce) g
Feed-through	With rib	Grey	DS1.5/6.ADO	1SNA299497R2700		100	4.00
	Without rib for TB assembly extremity	Grey	DSE1.5/6.ADO	1SNA299558R1300		20	4.00

Main technical data

		IEC	UL	CSA
ADO	Rigid: Solid/Stranded	0.28-1.5 mm²	22-16 AWG	
	Flexible without ferrule	0.34-1.5 mm²		
Screw clamp	Rigid: Solid/Stranded			
	Flexible without ferrule			
	Flexible with insulated ferrule			
	Gauge			
Rated current / Rated cross section		17.5 A / 1.5 mm²	20 A / 16 AWG	
Rated short-time withstand current (1s)		180 A		
Rated voltage		1000 V	600 V	
Impulse withstand voltage				
Protection		IP20	NEMA 1	

Mounting instructions

Rail		TH 35-7.5, TH 35-15
Wire stripping length		
Tool		
Torque		

The connecting capacity data for one Rigid: Solid/Stranded Flexible conductor (when applicable) is a mandatory information required by IEC, UL and CSA standards (Copper conductors). All other data are provided as supplementary information only. For more details, please consult our CB, UL or CSA certificates and technical datasheet available on http://www.TE.com

RoHS RoHS | USR CNR | Gost R

Notes

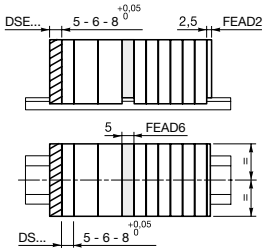

- End section FEAD2 to be mounted directly on the open part of the terminal block.
- End terminal block DSE has to be mounted at the end of the terminal blocks assembly: It reduces its size, because it suppresses the insulation rib (- 4 mm).
- Nota: This terminal block cannot be accidently located anywhere else into the terminal block assembly (without locking holes)
- Separator FEAD6 which snaps on the terminal blocks, separates and makes visible the different parts of the terminal blocks assembly.

Accessories

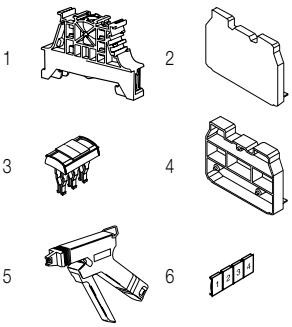

	Description			Color	Type	Part Number		Pkg pce	Weight (1 pce) g
1	**End stops**	10 mm	0.394 in	Dark grey	BAM4	1SNK900001R0000		50	14.00
		5.2 mm	0.205 in		BAZ1	1SNK900002R0000		50	5.30
2	**End sections**	2.5 mm	0.098 in	Grey	FEAD2	1SNA199423R1000		20	1.30
3	**Jumper bars**	2 poles	17.5 A	Orange	BJADO6-2	1SNA205974R0600		20	1.00
		3 poles			BJADO6-3	1SNA205975R0700		20	1.00
		10 poles			BJADO6-10	1SNA205982R2700		10	6.00
4	**Circuit separators**	5 mm	0.197 in	Grey	FEAD6	1SNA199435R1400		20	1.80
5	**Tools**	Semi automatic tool			OUPAD	1SNA178944R0400		1	205.00
		Hand tool			OUMAD	1SNA179466R0600		1	29.00
6	**Terminal block markers**	Blank card		White	RC65	1SNA232000R0000		1	3.60

Complete list of accessories is indicated in the terminal block datasheet.
Some accessories such as jumper bars may modify the terminal block's ratings: complete information in the accessories catalogue pages.

Technical data valid for copper conductors only.

1SNC163063S0201 Rev. A

DS2.5/8.ADO IDC terminal blocks

Miniblocks ADO-ADO - 8 mm 0.315 in spacing

2.5 mm²
14 AWG

1SNC163096F0014

DS2.5/8.ADO

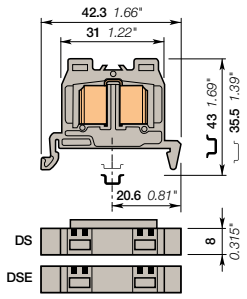

8 mm 0.315 in spacing

Description

- The mini blocks are particularly designed for applications where space is very restricted,
- With the TE Connectivity ADO System®, experience the fastest and most reliable connection on the market,
- Designed for control applications exposed to severe constrains (vibrations, shocks, corrosion etc.),
- Up to 2 wires per connection.

Ordering details

Description		Color	Type	Part Number		Pkg pce	Weight (1 pce) g
Feed-through	With rib and 2 notches for wire size 1-2.5 mm² (16-14 AWG)	Grey	DS2.5/8.ADO	1SNA299501R0300		100	6.00
	Without rib for TB assembly extremity and 2 notches for wire size 1-2.5 mm² (16-14 AWG)	Grey	DSE2.5/8.ADO	1SNA299559R1400		20	6.00

Main technical data

		IEC	UL	CSA
ADO	Rigid: Solid/Stranded	1-2.5 mm²	16-14 AWG	
	Flexible without ferrule	1-2.5 mm²		
Screw clamp	Rigid: Solid/Stranded			
	Flexible without ferrule			
	Flexible with insulated ferrule			
	Gauge			
Rated current / Rated cross section		24 A / 2.5 mm²	25 A / 14 AWG	
Rated short-time withstand current (1s)		300 A		
Rated voltage		1000 V	600 V	
Impulse withstand voltage				
Protection		IP20	NEMA 1	

Mounting instructions

Rail		TH 35-7.5, TH 35-15
Wire stripping length		
Tool		
Torque		

The connecting capacity data for one Rigid: Solid/Stranded, or one Flexible conductor (when applicable) is a mandatory information required by IEC, UL and CSA standards (Copper conductors). All other data are provided as supplementary information only. For more details, please consult our CB, UL or CSA certificates and technical datasheet available on http://www.TE.com

RoHS cCSAus Gost R

Notes

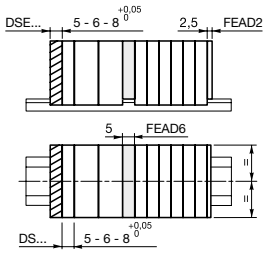

- End section FEAD2 to be mounted directly on the open part of the terminal block.
- End terminal block DSE has to be mounted at the end of the terminal blocks assembly: It reduces its size, because it suppresses the insulation rib (- 4 mm).
- Nota: This terminal block cannot be accidently located anywhere else into the terminal block assembly (without locking holes)
- Separator FEAD6 which snaps on the terminal blocks, separates and makes visible the different parts of the terminal blocks assembly.

Accessories

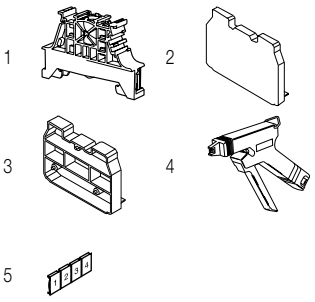

	Description			Color	Type	Part Number		Pkg pce	Weight (1 pce) g
1	**End stops**	10 mm	0.394 in	Dark grey	BAM4	1SNK900001R0000		50	14.00
		5.2 mm	0.205 in		BAZ1	1SNK900002R0000		50	5.30
2	**End sections**	2.5 mm	0.098 in	Grey	FEAD2	1SNA199423R1000		20	1.30
3	**Circuit separators**	5 mm	0.197 in	Grey	FEAD6	1SNA199435R1400		20	1.80
4	**Tools**	Semi automatic tool			OUPAD	1SNA178944R0400		1	205.00
		Hand tool			OUMAD	1SNA179466R0600		1	29.00
5	**Terminal block markers**	Blank card			RCAL85	1SNA237000R0500		1	2.90

Complete list of accessories is indicated in the terminal block datasheet.
Some accessories such as jumper bars may modify the terminal block's ratings: complete information in the accessories catalogue pages.

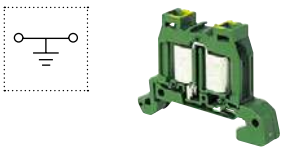

Ground IDC terminal blocks

Description		Color	Type	Part Number		Pkg pce	Weight (1 pce) g
Ground	Profile aligned with DS2.5/8.ADO	Green-yellow	DS2.5/8.P.ADO	1SNA199528R2100		100	10.00

Technical data valid for copper conductors only.

1SNC163064S0201 - Rev. A

DS2.5/8.P.ADO IDC terminal blocks

Miniblocks ADO-ADO - 8 mm 0.315 in spacing

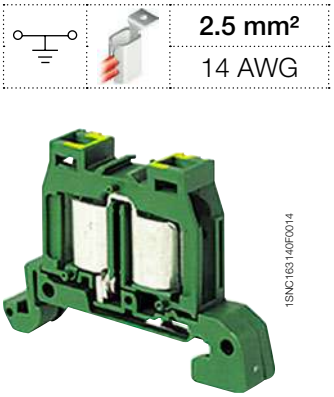

2.5 mm²
14 AWG

1SNC163140F0014

DS2.5/8.P.ADO

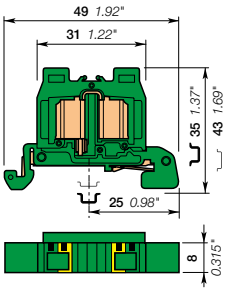

8 mm 0.315 in spacing

Description

- The mini blocks are particularly designed for applications where space is very restricted,
- Protect your installation in the event of a short-circuit thanks to our screwless rail contact non operator dependent,
- Secure mounting or removal from the rail,
- With the TE Connectivity ADO System®, experience the fastest and most reliable connection on the market,
- Up to 2 wires per connection.

Ordering details

Description		Color	Type	Part Number		Pkg pce	Weight (1 pce) g
Ground	With 2 notches for wire size 1-2.5 mm² (16-14 AWG)	Green-yellow	DS2.5/8.P.ADO	1SNA199528R2100		100	10.00

Main technical data

		IEC	UL	CSA
ADO	Rigid: Solid/Stranded	1-2.5 mm²	16-14 AWG	
	Flexible without ferrule	1-2.5 mm²		
Screw clamp	Rigid: Solid/Stranded			
	Flexible without ferrule			
	Flexible with insulated ferrule			
	Gauge			
Rated cross section		2.5 mm²	14 AWG	
Rated short-time withstand current (1s)		300 A		
Protection		IP20	NEMA 1	

Mounting instructions

Rail		TH 35-7.5, TH 35-15
Wire stripping length		
Tool		
Torque		

The connecting capacity data for one Rigid: Solid/Stranded, or one Flexible conductor (when applicable) is a mandatory information required by IEC, UL and CSA standards (Copper conductors). All other data are provided as supplementary information only. For more details, please consult our CB, UL or CSA certificates and technical datasheet available on http://www.TE.com

RoHS RoHS | cCSAus | Gost R

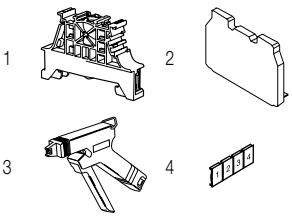

Accessories

	Description			Color	Type	Part Number		Pkg pce	Weight (1 pce) g
1	**End stops**	10 mm	0.394 in	Dark grey	BAM4	1SNK900001R0000		50	14.00
		5.2 mm	0.205 in		BAZ1	1SNK900002R0000		50	5.30
2	**End sections**	2.5 mm	0.098 in	Grey	FEAD2	1SNA199423R1000		20	1.30
3	**Tools**	Semi automatic tool			OUPAD	1SNA178944R0400		1	205.00
		Hand tool			OUMAD	1SNA179466R0600		1	29.00
4	**Terminal block markers**	Blank card			RCAL85	1SNA237000R0500		1	2.90

Complete list of accessories is indicated in the terminal block datasheet.
Some accessories such as jumper bars may modify the terminal block's ratings: complete information in the accessories catalogue pages.

Technical data valid for copper conductors only.

1SNC163065S0201 - Rev. A

DR1/5.ADO IDC terminal blocks

Miniblocks ADO-ADO - 5 mm 0.197 in spacing

1 mm²
18 AWG

DR1/5.ADO

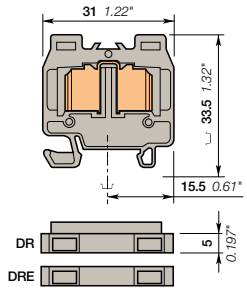

5 mm 0.197 in spacing

Description

- The mini blocks are particularly designed for applications where space is very restricted,
- With the TE Connectivity ADO System®, experience the fastest and most reliable connection on the market,
- Designed for control applications exposed to severe constrains (vibrations, shocks, corrosion etc.),
- Up to 2 wires per connection.

Ordering details

Description		Color	Type	Part Number		Pkg pce	Weight (1 pce) g
Feed-through	With rib	Grey	DR1/5.ADO	1SNA399491R2500		100	3.00
	Without rib for TB assembly extremity	Grey	DRE1/5.ADO	1SNA399495R2100		20	3.00

Main technical data

		IEC	UL	CSA
ADO	Rigid: Solid/Stranded	0.2-1 mm²	24-18 AWG	
	Flexible without ferrule	0.22-1 mm²		
Screw clamp	Rigid: Solid/Stranded			
	Flexible without ferrule			
	Flexible with insulated ferrule			
	Gauge			
Rated current / Rated cross section		13.5 A / 1 mm²	10 A / 18 AWG	
Rated short-time withstand current (1s)		120 A		
Rated voltage		1000 V	600 V	
Impulse withstand voltage		8000 V		
Protection		IP20	NEMA 1	

Mounting instructions

Rail		TH 15-5.5
Wire stripping length		
Tool		
Torque		

The connecting capacity data for one Rigid: Solid/Stranded, or one Flexible conductor (when applicable) is a mandatory information required by IEC, UL and CSA standards (Copper conductors). All other data are provided as supplementary information only. For more details, please consult our CB, UL or CSA certificates and technical datasheet available on http://www.TE.com

RoHS RoHS · USR CNR · Gost R

Notes

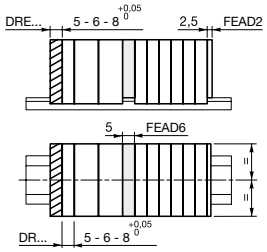

- End section FEAD1 to be mounted directly on the open part of the terminal block.
- End terminal block DRE has to be mounted at the end of the terminal blocks assembly: it reduces its size, because it suppresses the insulation rib (- 4 mm).
- Nota: This terminal block cannot be accidently located anywhere else into the terminal block assembly (without locking holes)
- Separator FEAD5 which snaps on the terminal blocks, separates and makes visible the different parts of the terminal blocks assembly.

Accessories

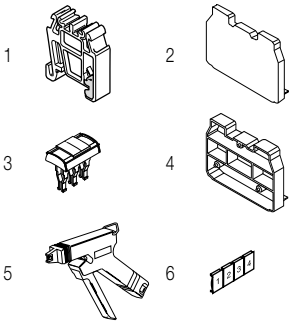

	Description			Color	Type	Part Number		Pkg pce	Weight (1 pce) g
1	**End stops**	6.5 mm	0.256 in	Grey	BADRL	1SNA199420R2100		50	2.00
2	**End sections**	2.5 mm	0.098 in	Grey	FEAD2	1SNA199423R1000		20	1.30
3	**Jumper bars**	2 poles	13.5 A	Orange	BJADO5-2	1SNA205955R0300		20	1.00
		3 poles			BJADO5-3	1SNA205956R0400		20	1.00
		10 poles			BJADO5-10	1SNA205963R0300		10	5.00
4	**Circuit separators**	5 mm	0.197 in	Grey	FEAD6	1SNA199435R1400		20	1.80
5	**Tools**	Semi automatic tool			OUPAD	1SNA178944R0400		1	205.00
		Hand tool			OUMAD	1SNA179466R0600		1	29.00
6	**Terminal block markers**	Blank card		White	RC55	1SNA230000R1200		1	2.90

Complete list of accessories is indicated in the terminal block datasheet.
Some accessories such as jumper bars may modify the terminal block's ratings: complete information in the accessories catalogue pages.

Technical data valid for copper conductors only.

1SNC163066S0201 - Rev. A

DR1.5/6.ADO IDC terminal blocks

Miniblocks ADO-ADO - 6 mm 0.236 in spacing

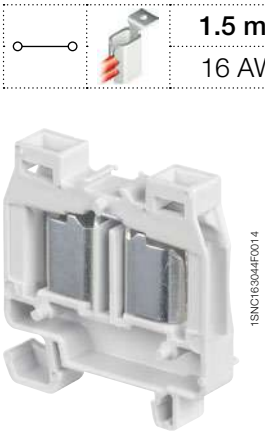

DR1.5/6.ADO

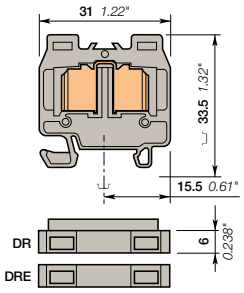

6 mm 0.236 in spacing

	1.5 mm²
	16 AWG

Description

- The mini blocks are particularly designed for applications where space is very restricted,
- With the TE Connectivity ADO System®, experience the fastest and most reliable connection on the market,
- Designed for control applications exposed to severe constrains (vibrations, shocks, corrosion etc.),
- Up to 2 wires per connection.

Ordering details

Description		Color	Type	Part Number		Pkg pce	Weight (1 pce) g
Feed-through	With rib	Grey	DR1.5/6.ADO	1SNA199283R2400		100	4.00
	Without rib for TB assembly extremity	Grey	DRE1.5/6.ADO	1SNA299554R0700		20	4.00

Main technical data

		IEC	UL	CSA
ADO	Rigid: Solid/Stranded	0.28-1.5 mm²	22-16 AWG	
	Flexible without ferrule	0.34-1.5 mm²	22-16 AWG	
Screw clamp	Rigid: Solid/Stranded			
	Flexible without ferrule			
	Flexible with insulated ferrule			
	Gauge			
Rated current / Rated cross section		17.5 A / 1.5 mm²	20 A / 16 AWG	
Rated short-time withstand current (1s)		180 A		
Rated voltage		1000 V	600 V	
Impulse withstand voltage		8000 V		
Protection		IP20	NEMA 1	

Mounting instructions

Rail		TH 15-5.5
Wire stripping length		
Tool		
Torque		

The connecting capacity data for one Rigid: Solid/Stranded, or one Flexible conductor (when applicable) is a mandatory information required by IEC, UL and CSA standards (Copper conductors). All other data are provided as supplementary information only. For more details, please consult our CB, UL or CSA certificates and technical datasheet available on http://www.TE.com

RoHS RoHS | cCSAus | Gost R

Notes

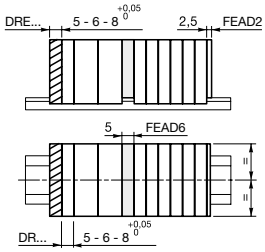

- End section FEAD1 to be mounted directly on the open part of the terminal block.
- End terminal block DRE has to be mounted at the end of the terminal blocks assembly: it reduces its size, because it suppresses the insulation rib (- 4 mm).
- Nota: This terminal block cannot be accidently located anywhere else into the terminal block assembly (without locking holes)
- Separator FEAD5 which snaps on the terminal blocks, separates and makes visible the different parts of the terminal blocks assembly.

Accessories

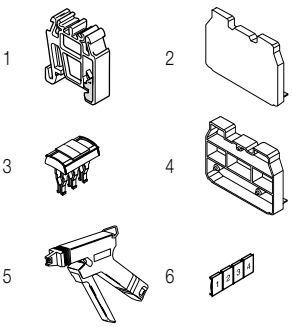

	Description			Color	Type	Part Number		Pkg pce	Weight (1 pce) g
1	**End stops**	6.5 mm	0.256 in	Grey	BADRL	1SNA199420R2100		50	2.00
2	**End sections**	2.5 mm	0.098 in	Grey	FEAD2	1SNA199423R1000		20	1.30
3	**Jumper bars**	2 poles	17.5 A	Orange	BJADO6-2	1SNA205974R0600		20	1.00
		3 poles			BJADO6-3	1SNA205975R0700		20	1.00
		10 poles			BJADO6-10	1SNA205982R2700		10	6.00
4	**Circuit separators**	5 mm	0.197 in	Grey	FEAD6	1SNA199435R1400		20	1.80
5	**Tools**	Semi automatic tool			OUPAD	1SNA178944R0400		1	205.00
		Hand tool			OUMAD	1SNA179466R0600		1	29.00
6	**Terminal block markers**	Blank card		White	RC65	1SNA232000R0000		1	3.60

Complete list of accessories is indicated in the terminal block datasheet.
Some accessories such as jumper bars may modify the terminal block's ratings: complete information in the accessories catalogue pages.

Technical data valid for copper conductors only.

1SNC163067S0201 - Rev. A

DR2.5/8.ADO IDC terminal blocks

Miniblocks ADO-ADO - 8 mm 0.315 in spacing

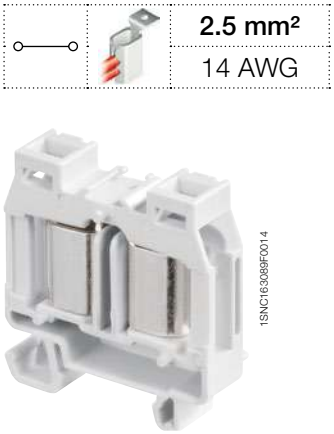

DR2.5/8.ADO

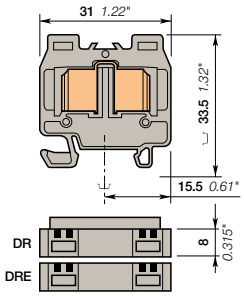

8 mm 0.315 in spacing

2.5 mm²
14 AWG

Description

- The mini blocks are particularly designed for applications where space is very restricted,
- With the TE Connectivity ADO System®, experience the fastest and most reliable connection on the market,
- Designed for control applications exposed to severe constrains (vibrations, shocks, corrosion etc.),
- Up to 2 wires per connection.

Ordering details

Description		Color	Type	Part Number		Pkg pce	Weight (1 pce) g
Feed-through	With rib and 2 notches for wire size 1-2.5 mm² (16-14 AWG)	Grey	DR2.5/8.ADO	1SNA199287R2000		100	6.00
	Without rib for TB assembly extremity and 2 notches for wire size 1-2.5 mm² (16-14 AWG)	Grey	DRE2.5/8.ADO	1SNA299555R0000		20	6.00

Main technical data

		IEC	UL	CSA
ADO	Rigid: Solid/Stranded	1-2.5 mm²	16-14 AWG	
	Flexible without ferrule	1-2.5 mm²	16-14 AWG	
Screw clamp	Rigid: Solid/Stranded			
	Flexible without ferrule			
	Flexible with insulated ferrule			
	Gauge			
Rated current / Rated cross section		24 A / 2.5 mm²	25 A / 14 AWG	
Rated short-time withstand current (1s)		8000 A		
Rated voltage		1000 V	600 V	
Impulse withstand voltage		8000 V		
Protection		IP20	NEMA 1	

Mounting instructions

Rail		TH 15-5.5
Wire stripping length		
Tool		
Torque		

The connecting capacity data for one Rigid: Solid/Stranded, or one Flexible conductor (when applicable) is a mandatory information required by IEC, UL and CSA standards (Copper conductors). All other data are provided as supplementary information only. For more details, please consult our CB, UL or CSA certificates and technical datasheet available on http://www.TE.com

RoHS RoHS | cCSAus | Gost R

Notes

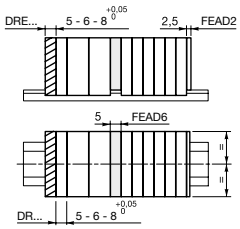

- End section FEAD1 to be mounted directly on the open part of the terminal block.
- End terminal block DRE has to be mounted at the end of the terminal blocks assembly: it reduces its size, because it suppresses the insulation rib (- 4 mm).
- Nota: This terminal block cannot be accidently located anywhere else into the terminal block assembly (without locking holes)
- Separator FEAD5 which snaps on the terminal blocks, separates and makes visible the different parts of the terminal blocks assembly.

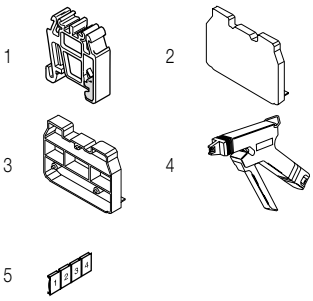

Accessories

	Description			Color	Type	Part Number		Pkg pce	Weight (1 pce) g
1	**End stops**	6.5 mm	0.256 in	Grey	BADRL	1SNA199420R2100		50	2.00
2	**End sections**	2.5 mm	0.098 in	Grey	FEAD2	1SNA199423R1000		20	1.30
3	**Circuit separators**	5 mm	0.197 in	Grey	FEAD6	1SNA199435R1400		20	1.80
4	**Tools**	Semi automatic tool			OUPAD	1SNA178944R0400		1	205.00
		Hand tool			OUMAD	1SNA179466R0600		1	29.00
5	**Terminal block markers**	Blank card			RCAL85	1SNA237000R0500		1	2.90

Complete list of accessories is indicated in the terminal block datasheet.
Some accessories such as jumper bars may modify the terminal block's ratings: complete information in the accessories catalogue pages.

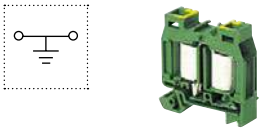

Ground IDC terminal blocks

Description		Color	Type	Part Number		Pkg pce	Weight (1 pce) g
Ground	Profile aligned with DR2.5/8.ADO	Green-yellow	DR2.5/8.P.ADO	1SNA299633R0600		100	8.00

Technical data valid for copper conductors only.

1SNC163068S0201 - Rev. A

DR2.5/8.P.ADO IDC terminal blocks

Miniblocks ADO-ADO - 8 mm 0.315 in spacing

DR2.5/8.P.ADO

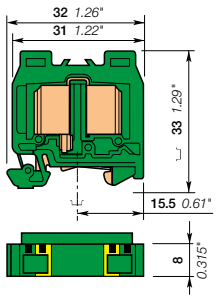

8 mm 0.315 in spacing

2.5 mm²	
14 AWG	

Description

- The mini blocks are particularly designed for applications where space is very restricted,
- Protect your installation in the event of a short-circuit thanks to our screwless rail contact non operator dependent,
- Secure mounting or removal from the rail,
- With the TE Connectivity ADO System®, experience the fastest and most reliable connection on the market,
- Up to 2 wires per connection.

Ordering details

Description		Color	Type	Part Number		Pkg pce	Weight (1 pce) g
Ground	With 2 notches for wire size 1-2.5 mm² (16-14 AWG)	Green-yellow	DR2.5/8.P.ADO	1SNA299633R0600		100	8.00

Main technical data

		IEC	UL	CSA
ADO	Rigid: Solid/Stranded	1-2.5 mm²	16-14 AWG	
	Flexible without ferrule	1-2.5 mm²		
Screw clamp	Rigid: Solid/Stranded			
	Flexible without ferrule			
	Flexible with insulated ferrule			
	Gauge			
Rated cross section		2.5 mm²	14 AWG	
Rated short-time withstand current (1s)		300 A		
Protection		IP20	NEMA 1	

Mounting instructions

Rail		TH 15-5.5
Wire stripping length		
Tool		
Torque		

The connecting capacity data for one Rigid: Solid/Stranded, or one Flexible conductor (when applicable) is a mandatory information required by IEC, UL and CSA standards (Copper conductors). All other data are provided as supplementary information only. For more details, please consult our CB, UL or CSA certificates and technical datasheet available on http://www.TE.com

RoHS RoHS | cCSAus | Gost R

6

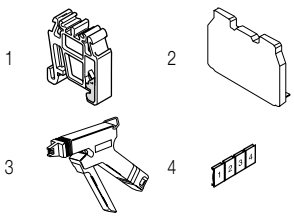

Accessories

	Description			Color	Type	Part Number		Pkg pce	Weight (1 pce) g
1	**End stops**	6.5 mm	0.256 in	Grey	BADRL	1SNA199420R2100		50	2.00
2	**End sections**	2.5 mm	0.098 in	Grey	FEAD2	1SNA199423R1000		20	1.30
3	**Tools**	Semi automatic tool			OUPAD	1SNA178944R0400		1	205.00
		Hand tool			OUMAD	1SNA179466R0600		1	29.00
4	**Terminal block markers**	Blank card			RCAL85	1SNA237000R0500		1	2.90

Complete list of accessories is indicated in the terminal block datasheet.
Some accessories such as jumper bars may modify the terminal block's ratings: complete information in the accessories catalogue pages.

Technical data valid for copper conductors only.

1SNC163069S0201 - Rev. A

DB1.5/6.ADO IDC terminal blocks

Miniblocks ADO-ADO - 6 mm 0.236 in spacing

1.5 mm²
16 AWG

DB1.5/6.ADO

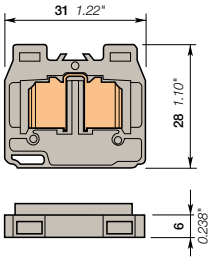

6 mm 0.236 in spacing

Description

- The mini blocks are particularly designed for applications where space is very restricted,
- With the TE Connectivity ADO System®, experience the fastest and most reliable connection on the market,
- Designed for control applications exposed to severe constrains (vibrations, shocks, corrosion etc.),
- Easy base mounting thanks to the usage of flanges,
- Up to 2 wires per connection.

Ordering details

Description	Color	Type	Part Number		Pkg pce	Weight (1 pce) g
Feed-through	Grey	DB1.5/6.ADO	1SNA299513R2600		100	4.00

Main technical data

		IEC	UL	CSA
ADO	Rigid: Solid/Stranded	0.28-1.5 mm²	22-16 AWG	
	Flexible without ferrule	0.34-1.5 mm²		
Screw clamp	Rigid: Solid/Stranded			
	Flexible without ferrule			
	Flexible with insulated ferrule			
	Gauge			
Rated current / Rated cross section		17.5 A / 1.5 mm²	20 A / 16 AWG	
Rated short-time withstand current (1s)		180 A		
Rated voltage		1000 V	600 V	
Impulse withstand voltage		8000 V		
Protection		IP20	NEMA 1	

Mounting instructions

Rail	
Wire stripping length	
Tool	
Torque	

The connecting capacity data for one Rigid: Solid/Stranded Flexible conductor (when applicable) is a mandatory information required by IEC, UL and CSA standards (Copper conductors). All other data are provided as supplementary information only. For more details, please consult our CB, UL or CSA certificates and technical datasheet available on http://www.TE.com

RoHS RoHS | cCSAus | Gost R

Notes

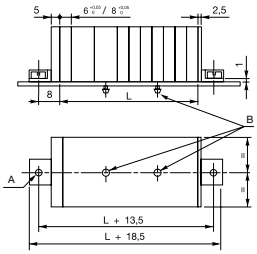

A: 2 holes DIA 3.2 mm for 3 mm screw max. with cylindrical head (not supplied)

L = (N blocks x 6) + (N blocks x 8)

Plate thickness 0.6 to 1.2 mm

Intermediate mounting of DH blocks every 2 blocks (spacing 8 mm) or 3 blocks (spacing 6 mm)

Accessories

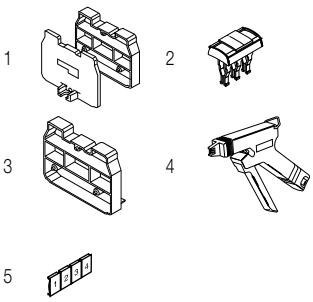

	Description			Color	Type	Part Number		Pkg pce	Weight (1 pce) g
1	End section kits			Grey	FEAD4	1SNA199439R2000		20	3.00
2	Jumper bars	2 poles	17.5 A	Orange	BJADO6-2	1SNA205974R0600		20	1.00
		3 poles			BJADO6-3	1SNA205975R0700		20	1.00
		10 poles			BJADO6-10	1SNA205982R2700		10	6.00
3	Circuit separators	5 mm	0.197 in	Grey	FEAD6	1SNA199435R1400		20	1.80
4	Tools	Semi automatic tool			OUPAD	1SNA178944R0400		1	205.00
		Hand tool			OUMAD	1SNA179466R0600		1	29.00
5	Terminal block markers	Blank card		White	RC65	1SNA232000R0000		1	3.60

Complete list of accessories is indicated in the terminal block datasheet.
Some accessories such as jumper bars may modify the terminal block's ratings: complete information in the accessories catalogue pages.

Technical data valid for copper conductors only.

1SNC163070S0201 Rev. A

DB2.5/8.ADO IDC terminal blocks

Miniblocks ADO-ADO - 8 mm 0.315 in spacing

DB2.5/8.ADO

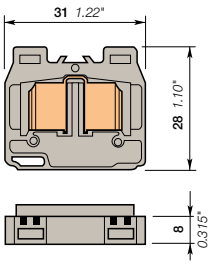

8 mm 0.315 in spacing

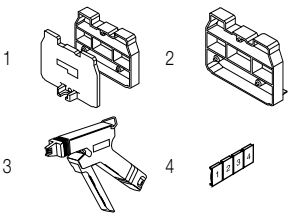

	2.5 mm²
	14 AWG

Description

- The mini blocks are particularly designed for applications where space is very restricted,
- With the TE Connectivity ADO System®, experience the fastest and most reliable connection on the market,
- Designed for control applications exposed to severe constrains (vibrations, shocks, corrosion etc.),
- Easy base mounting thanks to the usage of flanges,
- Up to 2 wires per connection.

Ordering details

Description		Color	Type	Part Number		Pkg pce	Weight (1 pce) g
Feed-through	With 2 notches for wire size 1-2.5 mm² (16-14 AWG)	Grey	DB2.5/8.ADO	1SNA299517R2200		100	6.00

Main technical data

		IEC	UL	CSA
ADO	Rigid: Solid/Stranded	1-2.5 mm²	16-14 AWG	
	Flexible without ferrule	1-2.5 mm²		
Screw clamp	Rigid: Solid/Stranded			
	Flexible without ferrule			
	Flexible with insulated ferrule			
	Gauge			
Rated current / Rated cross section		24 A / 2.5 mm²	25 A / 14 AWG	
Rated short-time withstand current (1s)		300 A		
Rated voltage		800 V	600 V	
Impulse withstand voltage		8000 V		
Protection		IP20	NEMA 1	

Mounting instructions

Rail	
Wire stripping length	
Tool	
Torque	

The connecting capacity data for one Rigid: Solid/Stranded, or one Flexible conductor (when applicable) is a mandatory information required by IEC, UL and CSA standards (Copper conductors). All other data are provided as supplementary information only. For more details, please consult our CB, UL or CSA certificates and technical datasheet available on http://www.TE.com

RoHS cCSAus Gost R

Notes

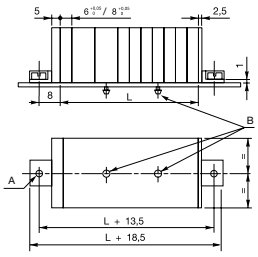

A: 2 holes DIA 3.2 mm for 3 mm screw max. with cylindrical head (not supplied)

L = (N blocks x 6) + (N blocks x 8)

Plate thickness 0.6 to 1.2 mm

Intermediate mounting of DH blocks every 2 blocks (spacing 8 mm) or 3 blocks (spacing 6 mm)

Accessories

	Description		Color	Type	Part Number		Pkg pce	Weight (1 pce) g
1	**End section kits**		Grey	FEAD4	1SNA199439R2000		20	3.00
2	**Circuit separators**	5 mm 0.197 in	Grey	FEAD6	1SNA199435R1400		20	1.80
3	**Tools**	Semi automatic tool		OUPAD	1SNA178944R0400		1	205.00
		Hand tool		OUMAD	1SNA179466R0600		1	29.00
4	**Terminal block markers**	Blank card		RCAL85	1SNA237000R0500		1	2.90

Complete list of accessories is indicated in the terminal block datasheet.
Some accessories such as jumper bars may modify the terminal block's ratings: complete information in the accessories catalogue pages.

Technical data valid for copper conductors only.

1SNC163071S0201 - Rev. A

DH1.5/6.ADO IDC terminal blocks

Miniblocks ADO-ADO - 6 mm 0.236 in spacing

1.5 mm²
16 AWG

DH1.5/6.ADO

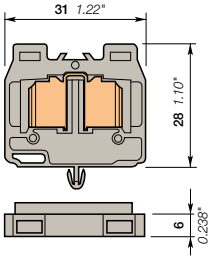

6 mm 0.236 in spacing

Description

- The mini blocks are particularly designed for applications where space is very restricted,
- With the TE Connectivity ADO System®, experience the fastest and most reliable connection on the market,
- Designed for control applications exposed to severe constrains (vibrations, shocks, corrosion etc.),
- Easy base mounting thanks to snap in mounting foot,
- Up to 2 wires per connection.

Ordering details

Description	Color	Type	Part Number		Pkg pce	Weight (1 pce) g
Feed-through	Grey	DH1.5/6.ADO	1SNA299529R0600		100	4.00

Main technical data

		IEC	UL	CSA
ADO	Rigid: Solid/Stranded	0.28-1.5 mm²	22-16 AWG	
	Flexible without ferrule	0.34-1.5 mm²		
Screw clamp	Rigid: Solid/Stranded			
	Flexible without ferrule			
	Flexible with insulated ferrule			
	Gauge			
Rated current / Rated cross section		17.5 A / 1.5 mm²	20 A / 16 AWG	
Rated short-time withstand current (1s)		180 A		
Rated voltage		1000 V	600 V	
Impulse withstand voltage		8000 V		
Protection		IP20	NEMA 1	

Mounting instructions

Rail	
Wire stripping length	
Tool	
Torque	

The connecting capacity data for one Rigid: Solid/Stranded, or one Flexible conductor (when applicable) is a mandatory information required by IEC, UL and CSA standards (Copper conductors). All other data are provided as supplementary information only. For more details, please consult our CB, UL or CSA certificates and technical datasheet available on http://www.TE.com

RoHS cCSAus Gost R

Notes

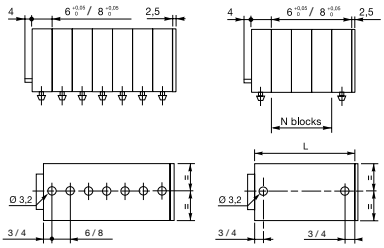

L = (N blocks x 6) + (N blocks x 8)

N blocks = 3 blocks max. with 6 mm spacing
2 blocks max. with 8 mm spacing

Plate thickness 0.6 to 1.2 mm

Accessories

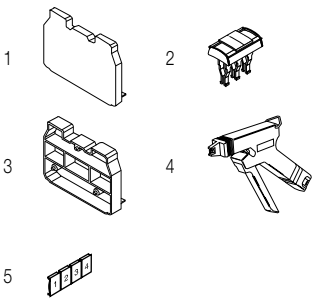

	Description			Color	Type	Part Number		Pkg pce	Weight (1 pce) g
1	End sections	2.5 mm	0.098 in	Grey	FEAD2	1SNA199423R1000		20	1.30
2	Jumper bars	2 poles	17.5 A	Orange	BJADO6-2	1SNA205974R0600		20	1.00
		3 poles			BJADO6-3	1SNA205975R0700		20	1.00
		10 poles			BJADO6-10	1SNA205982R2700		10	6.00
3	Circuit separators	5 mm	0.197 in	Grey	FEAD6	1SNA199435R1400		20	1.80
4	Tools	Semi automatic tool			OUPAD	1SNA178944R0400		1	205.00
		Hand tool			OUMAD	1SNA179466R0600		1	29.00
5	Terminal block markers	Blank card		White	RC65	1SNA232000R0000		1	3.60

Complete list of accessories is indicated in the terminal block datasheet.
Some accessories such as jumper bars may modify the terminal block's ratings: complete information in the accessories catalogue pages.

Technical data valid for copper conductors only.

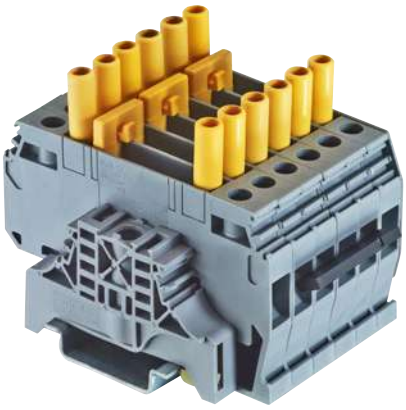

1SNC160100S0201

Dedicated applications terminal blocks
Test & measurement

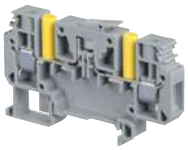

Technologies presentation			154
Overview			156

Screw clamp technology

Test disconnect with screwdriver sliding link

6 mm² / 8 AWG	**M6/8.ST**		157
	M6/8.ST1	With test	158
	M6/8.ST1.IP20	With insulated test sockets	159
	M6/8.ST3	With insulated rod	160
	M6/8.ST7	Feed-through	161
	M6/8.STA	With test	162

Test disconnect with blade

6 mm² / 8 AWG	**D6/10.SNBTB1**		163
	D6/10.SNBTB2	With test	164

Test disconnect with plug

4 mm² / 12 AWG	**M4/6.ST**		165
10 mm² / 8 AWG	**M10/10.ST-Sn**		166

Test disconnect with push-turn knob

6 mm² / 8 AWG	**M6/8.STP1**	With test	167
	M6/8.STP	With test	168

Spring loaded screw clamp technology

Test disconnect with screwdriver sliding link

6 mm² / 12 AWG	**D6/8.ST1.RS**	With test	169
	D6/8.ST1.RS.IP20	With insulated test sockets	170

1SNC160100S0201

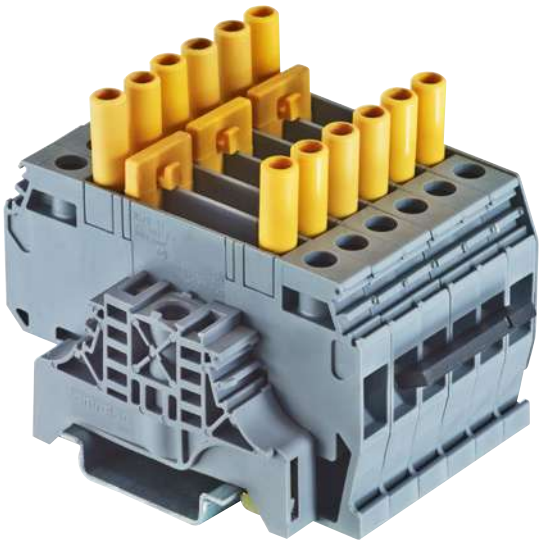

Secure your measurement operations

Our test & measurement terminal blocks benefit from our long experience in the energy applications.
A large choice of accessories make the test & measurement operation easy and secure.

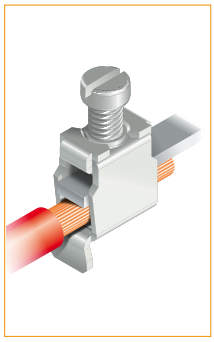

CE RoHS ISO 9001

A large choice of combinations and accessories

Short-circuit CT circuits safely and conveniently

TE connectivity's insulated short-circuit bridge allows secured short-circuit position thanks to AJS9 test sockets tightening.
Adapted hook shape maintains the bridge on terminal block in the non connected position.

Test your circuits with flexibility using AJS9 test sockets

The insulated test sockets AJS9 are available in 6 colors for convenient circuit identification.
They are compatible with standard DIA. 4 mm test plugs (IEC 60010-031).
Fully operated by screwdriver (DIA. 3.5 mm).

Convenient circuit distribution with lateral jumpers

TE Connectivity provides a whole set of lateral jumpers adapted to the various circuit configurations of our customers.

Secure your disconnect operation during short-circuiting

In non short-circuited position:
- The short circuiting bridge is opened. For security purpose, the access to the disconnect sliding unit is blocked (in closed position).

In short-circuited position:
- The short circuiting bridge is first positioned, authorizing access to the disconnect sliding unit for opening the circuit.

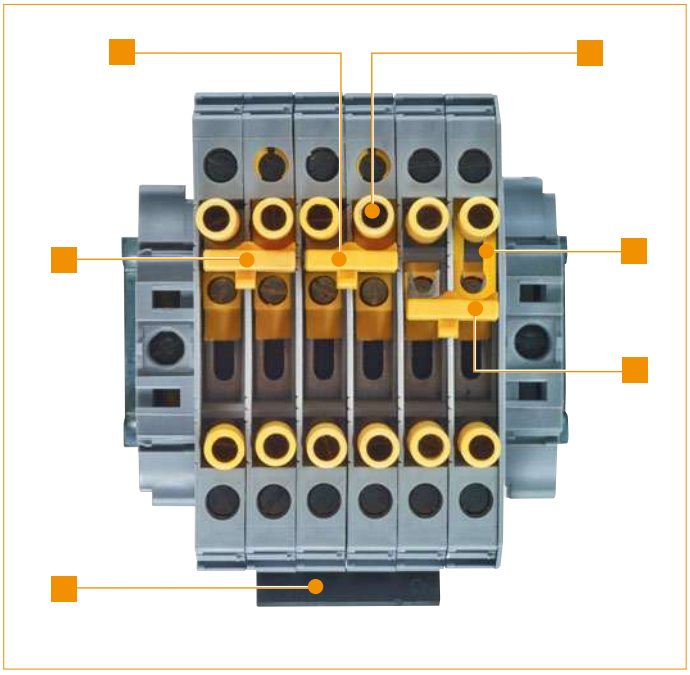

1SNC161164S0201

Common point on the transformers

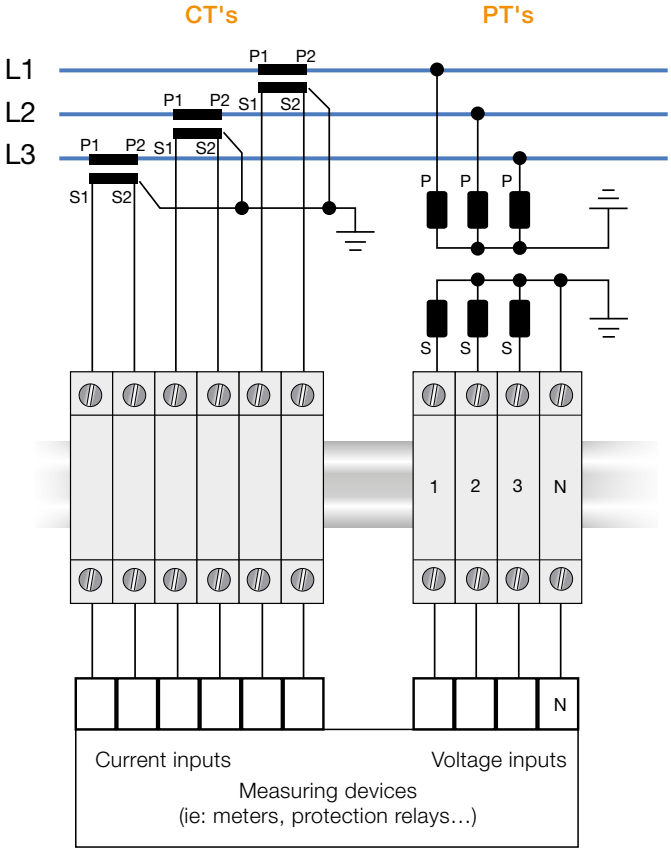

1SNC161165S0201

Screw clamp technology

Section IEC	UL/CSA	Test disconnect with screwdriver sliding link		Test disconnect with insulated rod sliding link	Feed-through	Test disconnect with screwdriver sliding link
6 mm²	8 AWG	M6/8.ST 6 mm 0.236 in	M6/8.ST1.IP20 6 mm 0.236 in	M6/8.ST3 8 mm 0.315 in	M6/8.ST7 8 mm 0.315 in	M6/8.STA 6 mm 0.236 in

Section IEC	UL/CSA	Test disconnect with blade	Test disconnect with plug	Test disconnect with push-turn knob	
4 mm²	12 AWG		M4/6.ST 6 mm 0.236 in		
6 mm²	8 AWG	D6/10.SNBTB 10 mm 0.394 in		M6/8.STP1 8 mm 0.315 in	M6/8.STP 8 mm 0.315 in
10 mm²	8 AWG		M10/10.ST-Sn 10 mm 0.394 in		

Spring loaded screw clamp technology

Section IEC	UL/CSA	Test disconnect with screwdriver sliding link
6 mm²	12 AWG	D6/8.ST1.RS.IP20 8 mm 0.315 in

1SNC161163S0201

M6/8.ST screw clamp terminal blocks

Test disconnect with a screwdriver sliding link - 8 mm 0.315 in spacing

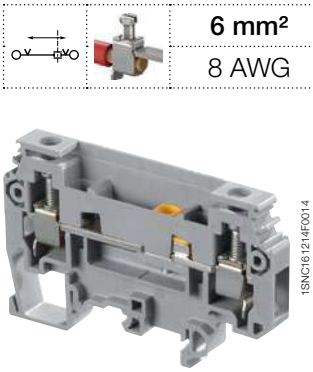

M6/8.ST

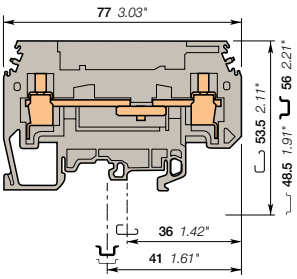

8 mm 0.315 in spacing

6 mm²
8 AWG

Description

Secure your disconnect operations with the disconnect sliding link operated with a screwdriver.

Ordering details

Description	Color	Type	Part Number		Pkg pce	Weight (1 pce) g
Disconnect	Grey	M6/8.ST	1SNA115236R1700		25	30.00

Main technical data

		IEC	UL	CSA
1 conductor per clamp	Rigid: Solid/Stranded	0.5-10 mm²	18 - 8 AWG	18-8 AWG
	Flexible without ferrule	0.5-6 mm²		
	Flexible with insulated ferrule			
	Gauge	A5		
Rated current / Rated cross section		40 A / 6 mm²	30 A / 8 AWG	30 A / 8 AWG
Rated short-time withstand current (1s)		720 A		
Rated voltage		630 V	150 V	150 V
Impulse withstand voltage				
Protection		IP20	NEMA 1	

Mounting instructions

Rail	G32, TH 35-7.5, TH 35-15
Wire stripping length	13 mm 0.51 in
Screw clamp Tool	Flat screwdriver Ø 5 mm Ø 0.197 in
Torque	0.8 - 1 N.m 7.1 - 8.9 lb.in
Disconnect device Tool	Flat screwdriver Ø 3.5 mm Ø 0.138 in
Torque	0.4 - 0.6 N.m 3.5 - 5.3 lb.in

The connecting capacity data for one Rigid: Solid/Stranded, or one Flexible conductor (when applicable) is a mandatory information required by IEC, UL and CSA standards (Copper conductors). All other data are provided as supplementary information only. For more details, please consult our CB, UL or CSA certificates and technical datasheet available on http://www.TE.com

CE RoHS USR CSA Gost R

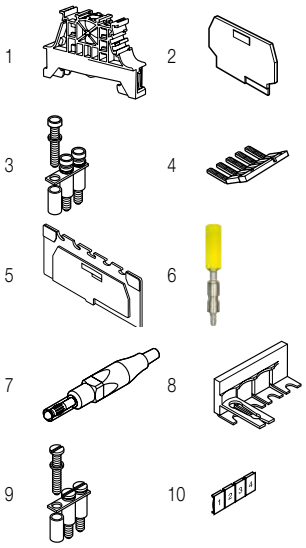

Accessories

	Description			Color	Type	Part Number		Pkg pce	Weight (1 pce) g
1	**End stops**	10 mm	0.394 in	Dark grey	BAM4	1SNK900001R0000		50	14.00
		5.2 mm	0.205 in		BAZ1	1SNK900002R0000		50	5.30
2	**End sections**	1 mm	0.039 in	Grey	FEMT2	1SNA113629R2700		10	2.00
3	**Jumper bars**	20 poles	41 A		BJS8-20	1SNA174789R0500		5	3.20
4	**Lateral jumper bars**	50 A		Black	PC8-10	1SNA163313R2400		10	14.00
					PC8-R1	1SNA400711R0600		10	6.60
					PC8-R2	1SNA400712R0700		10	7.84
					PC8-R3	1SNA400713R0000		10	9.00
					PC8-R4	1SNA400724R0300		10	4.50
5	**Circuit separators**	3 mm	0.118 in	Grey	SCFT2	1SNA114522R0500		20	
6	**Test sockets**	DIA 4 mm 0.157 in IP20		Yellow	AJS9	1SNA179726R0200		25	5.00
				Black	AJS9-1	1SNA206680R1500		25	3.60
				Green	AJS9-2	1SNA206681R0200		25	3.60
				Grey	AJS9-3	1SNA206682R0300		25	3.60
				Blue	AJS9-4	1SNA206683R0400		25	3.60
				Red	AJS9-5	1SNA206720R1400		25	3.60
		DIA 4 mm 0.157 in			AL4-M3	1SNA206721R0100		50	1.10
7	**Test plugs**	DIA 4 mm 0.157 in IP20		Red	FC4-1	1SNA167927R1000		10	11.00
8	**Short circuit bridges**	2 poles		Yellow	SC-JB8-2	1SNK900652R0000		25	2.00
		3 poles			SC-JB8-3	1SNK900653R0000		25	3.40
		4 poles			SC-JB8-4	1SNK900654R0000		25	4.70
9	**Fastening kits**	Sub assembly post + screw + washer			EV8S	1SNA168401R0300		20	3.00
10	**Terminal block markers**	Blank card		White	RC810	1SNA234000R0200		1	8.20

Complete list of accessories is indicated in the terminal block datasheet.
Some accessories such as jumper bars may modify the terminal block's ratings: complete information in the accessories catalogue pages.

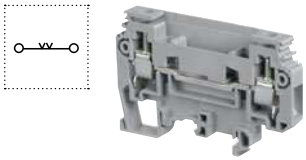

Feed-through screw clamp terminal blocks

Description		Color	Type	Part Number		Pkg pce	Weight (1 pce) g
Feed-through	Profile aligned with M6/8.ST...	Grey	M6/8.ST7	1SNA115243R2600		25	20.00

Technical data valid for copper conductors only.

1SNC161055S0201

M6/8.ST screw clamp terminal blocks

Test disconnect with a screwdriver sliding link - 8 mm 0.315 in spacing

6 mm²	
8 AWG	

M6/8.ST

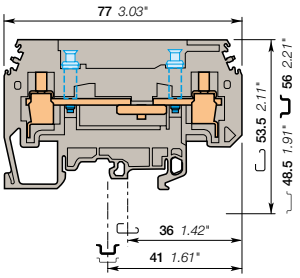

8 mm 0.315 in spacing

Description

- Secure your disconnect operations with the disconnect sliding link operated with a screwdriver,
- Ease your test operations with the 2 independent built-in test sockets compatible with DIA 4 mm 0.157 in test plugs.

Ordering details

Description		Color	Type	Part Number		Pkg pce	Weight (1 pce) g
Disconnect	With 2 test sockets DIA 4 mm 0.157 in	Grey	M6/8.ST1	1SNA115237R1000		25	30.00

Main technical data

		IEC	UL	CSA
1 conductor per clamp	Rigid: Solid/Stranded	0.5-10 mm²	18 - 8 AWG	18-8 AWG
	Flexible without ferrule	0.5-6 mm²		
	Flexible with insulated ferrule			
	Gauge	A5		
Rated current / Rated cross section		40 A / 6 mm²	30 A / 8 AWG	30 A / 8 AWG
Rated short-time withstand current (1s)		720 A		
Rated voltage		630 V	150 V	150 V
Impulse withstand voltage				
Protection			NEMA	

Mounting instructions

Rail	G32, TH 35-7.5, TH 35-15
Wire stripping length	13 mm 0.51 in
Screw clamp Tool	Flat screwdriver Ø 5 mm Ø 0.197 in
Torque	0.8 - 1 N.m 7.1 - 8.9 lb.in
Disconnect device Tool	Flat screwdriver Ø 3.5 mm Ø 0.138 in
Torque	0.4 - 0.6 N.m 3.5 - 5.3 lb.in

The connecting capacity data for one Rigid: Solid/Stranded, or one Flexible conductor (when applicable) is a mandatory information required by IEC, UL and CSA standards (Copper conductors). All other data are provided as supplementary information only. For more details, please consult our CB, UL or CSA certificates and technical datasheet available on http://www.TE.com

CE RoHS USR CSA Gost R

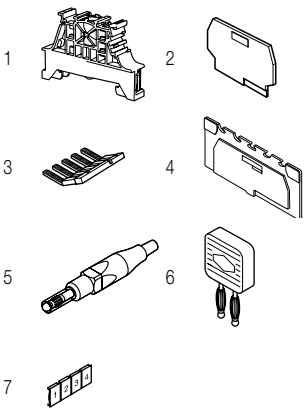

Accessories

	Description			Color	Type	Part Number		Pkg pce	Weight (1 pce) g
1	**End stops**	10 mm	0.394 in	Dark grey	BAM4	1SNK900001R0000		50	14.00
		9 mm	0.354 in		BAZ1	1SNK900002R0000		50	4.70
2	**End sections**	1 mm	0.039 in	Grey	FEMT2	1SNA113629R2700		10	2.00
3	**Lateral jumper bars**	50 A		Black	PC8-10	1SNA163313R2400		10	14.00
					PC8-R1	1SNA400711R0600		10	6.60
					PC8-R2	1SNA400712R0700		10	7.84
					PC8-R3	1SNA400713R0000		10	9.00
					PC8-R4	1SNA400724R0300		10	4.50
4	**Circuit separators**	3 mm	0.118 in	Grey	SCFT2	1SNA114522R0500		20	
5	**Test plugs**	DIA 4 mm 0.157 in IP20		Red	FC4-1	1SNA167927R1000		10	11.00
6	**Short circuit plugs**	DIA 4 mm 0.157 in			BP8.A4	1SNA173888R2000		10	
7	**Terminal block markers**	Blank card		White	RC810	1SNA234000R0200		1	8.20

Complete list of accessories is indicated in the terminal block datasheet.
Some accessories such as jumper bars may modify the terminal block's ratings: complete information in the accessories catalogue pages.

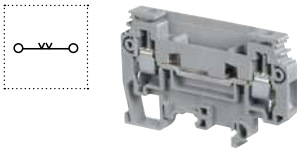

Feed-through screw clamp terminal blocks

Description		Color	Type	Part Number		Pkg pce	Weight (1 pce) g
Feed-through	Profile aligned with M6/8.ST...	Grey	M6/8.ST7	1SNA115243R2600		25	20.00

Technical data valid for copper conductors only.

1SNC161109S0201

M6/8.ST screw clamp terminal blocks

Test disconnect with a screwdriver sliding link - 8 mm 0.315 in spacing

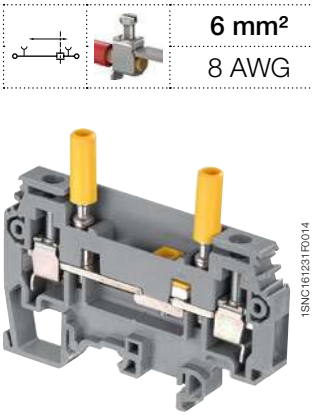

M6/8.ST

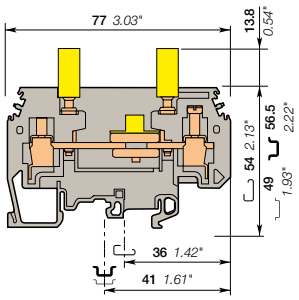

8 mm 0.315 in spacing

6 mm²
8 AWG

Description

- Terminal blocks especially designed for current transformers circuits:
- Easy and secured current measurement thanks to the two built-in test yellow sockets compatible with IP20 DIA 4 mm 0.157 in test plugs,
- Convenient short-circuit operations with the PCS sliding short circuiting bridges from 2 to 4 poles,
- Tests sockets available as well in black, green, grey and blue.

Ordering details

Description		Color	Type	Part Number		Pkg pce	Weight (1 pce) g
Disconnect	With two yellow test sockets DIA 4 mm 0.157 in	Grey	M6/8.ST1.IP20	1SNA115971R1000		25	40.00

Main technical data

		IEC	UL	CSA
1 conductor per clamp	Rigid: Solid/Stranded	0.5 - 10 mm²	18 - 8 AWG	18 - 8 AWG
	Flexible without ferrule	0.5 - 6 mm²		
	Flexible with insulated ferrule			
	Gauge	A5		
Rated current / Rated cross section		40 A / 6 mm²	30 A / 8 AWG	30 A / 8 AWG
Rated short-time withstand current (1s)		720 A		
Rated voltage		630 V	150 V	150 V
Impulse withstand voltage		8000 V		
Protection		IP20	NEMA 1	

Mounting instructions

Rail	G32, TH 35-7.5, TH 35-15
Wire stripping length	13 mm 0.51 in
Screw clamp Tool	Flat screwdriver Ø 3.5 mm Ø 0.138 in
Torque	0.8 - 1 N.m 7.1 - 8.9 lb.in
Disconnect device Tool	Flat screwdriver Ø 3.5 mm Ø 0.138 in
Torque	0.5 N.m 4.45 lb.in
Test socket Tool	Flat screwdriver Ø 3.5 mm Ø 0.138 in
Torque	0.6 N.m 5.34 lb.in

The connecting capacity data for one Rigid: Solid/Stranded, or one Flexible conductor (when applicable) is a mandatory information required by IEC, UL and CSA standards (Copper conductors). All other data are provided as supplementary information only. For more details, please consult our CB, UL or CSA certificates and technical datasheet available on http://www.TE.com

CE RoHS USR CSA Gost R

Accessories

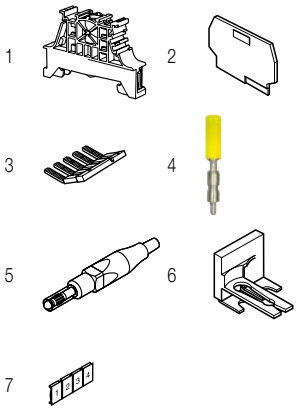

	Description			Color	Type	Part Number		Pkg pce	Weight (1 pce) g
1	**End stops**	10 mm	0.394 in	Dark grey	BAM4	1SNK900001R0000		50	14.00
		9 mm	0.354 in		BAZ1	1SNK900002R0000		50	4.70
2	**End sections**	1 mm	0.039 in	Grey	FEMT2	1SNA113629R2700		10	2.00
3	**Lateral jumper bars**	50 A		Black	PC8-10	1SNA163313R2400		10	14.00
					PC8-R1	1SNA400711R0600		10	6.60
					PC8-R2	1SNA400712R0700		10	7.84
					PC8-R3	1SNA400713R0000		10	9.00
					PC8-R4	1SNA400724R0300		10	4.50
4	**Test sockets**	DIA 4 mm 0.157 in IP20		Black	AJS9-1	1SNA206680R1500		25	3.60
				Green	AJS9-2	1SNA206681R0200		25	3.60
				Grey	AJS9-3	1SNA206682R0300		25	3.60
				Blue	AJS9-4	1SNA206683R0400		25	3.60
				Red	AJS9-5	1SNA206720R1400		25	3.60
5	**Test plugs**	DIA 4 mm 0.157 in IP20		Red	FC4-1	1SNA167927R1000		10	11.00
6	**Short circuit bridges**	2 poles		Yellow	SC-JB8-2	1SNK900652R0000		25	2.00
		3 poles			SC-JB8-3	1SNK900653R0000		25	3.40
		4 poles			SC-JB8-4	1SNK900654R0000		25	4.70
7	**Terminal block markers**	Blank card		White	RC810	1SNA234000R0200		1	8.20

Complete list of accessories is indicated in the terminal block datasheet.
Some accessories such as jumper bars may modify the terminal block's ratings: complete information in the accessories catalogue pages.

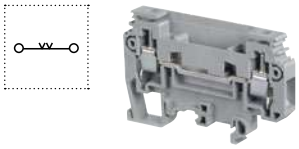

Feed-through screw clamp terminal blocks

Description		Color	Type	Part Number		Pkg pce	Weight (1 pce) g
Feed-through	Profile aligned with M6/8.ST...	Grey	M6/8.ST7	1SNA115243R2600		25	20.00

Technical data valid for copper conductors only.

1SNC161111S0201

M6/8.ST screw clamp terminal blocks

Test disconnect with insulated rod sliding link - 8 mm 0.315 in spacing

6 mm²
8 AWG

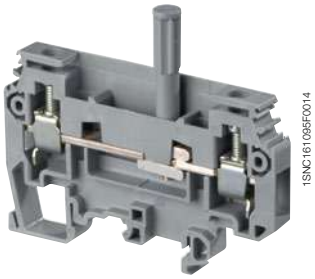

M6/8.ST

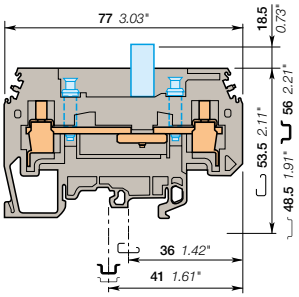

8 mm 0.315 in spacing

Description

- Secure your disconnect operations with the disconnect sliding link operated with a screwdriver,
- Ease your test operations with the two independent built-in test sockets compatible with DIA 4 mm 0.157 in test plugs.

Ordering details

Description		Color	Type	Part Number		Pkg pce	Weight (1 pce) g
Disconnect	With 2 test sockets DIA 4 mm 0.157 in	Grey	M6/8.ST3	1SNA115239R2200		25	30.00

Main technical data

		IEC	UL	CSA
1 conductor per clamp	Rigid: Solid/Stranded	0.5-10 mm²	18 - 8 AWG	18-8 AWG
	Flexible without ferrule	0.5-6 mm²		
	Flexible with insulated ferrule			
	Gauge	A5		
Rated current / Rated cross section		40 A / 6 mm²	30 A / 8 AWG	30 A / 8 AWG
Rated short-time withstand current (1s)		720 A		
Rated voltage		630 V	150 V	150 V
Impulse withstand voltage				
Protection			NEMA	

Mounting instructions

Rail	G32, TH 35-7.5, TH 35-15
Wire stripping length	
Screw clamp Tool	Flat screwdriver Ø 5 mm Ø 0.197 in
Torque	0.8 - 1 N.m 7.1 - 8.9 lb.in
Disconnect device Tool	Flat screwdriver Ø 3.5 mm Ø 0.138 in
Torque	0.4 - 0.6 N.m 3.5 - 5.3 lb.in

The connecting capacity data for one Rigid: Solid/Stranded, or one Flexible conductor (when applicable) is a mandatory information required by IEC, UL and CSA standards (Copper conductors). All other data are provided as supplementary information only. For more details, please consult our CB, UL or CSA certificates and technical datasheet available on http://www.TE.com

CE RoHS USR CSA Gost R

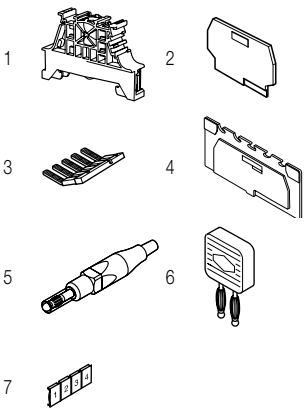

Accessories

	Description			Color	Type	Part Number		Pkg pce	Weight (1 pce) g
1	**End stops**	10 mm		Dark grey	BAM4	1SNK900001R0000		50	14.00
		9 mm			BAZ1	1SNK900002R0000		50	4.70
2	**End sections**	1 mm	0.039 in	Grey	FEMT2	1SNA113629R2700		10	2.00
3	**Lateral jumper bars**	50 A		Black	PC8-10	1SNA163313R2400		10	14.00
					PC8-R1	1SNA400711R0600		10	6.60
					PC8-R2	1SNA400712R0700		10	7.84
					PC8-R3	1SNA400713R0000		10	9.00
					PC8-R4	1SNA400724R0300		10	4.50
4	**Circuit separators**	3 mm	0.118 in	Grey	SCFT2	1SNA114522R0500		20	
5	**Test plugs**	DIA 4 mm 0.157 in IP20		Red	FC4-1	1SNA167927R1000		10	11.00
6	**Short circuit plugs**	DIA 4 mm 0.157 in			BP8.A4	1SNA173888R2000		10	
7	**Terminal block markers**	Blank card		White	RC810	1SNA234000R0200		1	8.20

Complete list of accessories is indicated in the terminal block datasheet.
Some accessories such as jumper bars may modify the terminal block's ratings: complete information in the accessories catalogue pages.

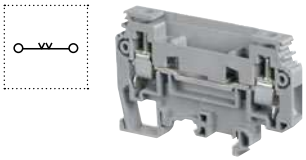

Feed-through screw clamp terminal blocks

Description		Color	Type	Part Number		Pkg pce	Weight (1 pce) g
Feed-through	Profile aligned with M6/8.ST...	Grey	M6/8.ST7	1SNA115243R2600		25	20.00

Technical data valid for copper conductors only.

1SNC161110S0201

M6/8.ST screw clamp terminal blocks
Feed-through - 8 mm 0.315 in spacing

6 mm²
8 AWG

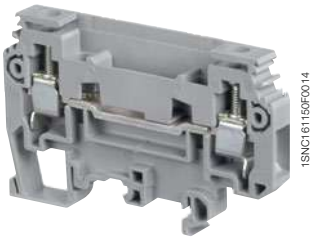

M6/8.ST

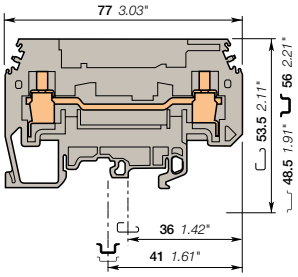

8 mm 0.315 in spacing

Description

Profile aligned with M6/8 ST.

Ordering details

Description	Color	Type	Part Number		Pkg pce	Weight (1 pce) g
Feed-through	Grey	M6/8.ST7	1SNA115243R2600		25	20.00

Main technical data

		IEC	UL	CSA
1 conductor per clamp	Rigid: Solid/Stranded	0.5-10 mm²	18 - 8 AWG	18-8 AWG
	Flexible without ferrule	0.5-6 mm²		
	Flexible with insulated ferrule			
	Gauge	A5		
Rated current / Rated cross section		40 A / 6 mm²	40 A / 8 AWG	40 A / 8 AWG
Rated short-time withstand current (1s)		720 A		
Rated voltage		630 V	150 V	150 V
Impulse withstand voltage				
Protection			NEMA	

Mounting instructions

Rail	G32, TH 35-7.5, TH 35-15
Wire stripping length	13 mm 0.51 in
Tool	Flat screwdriver Ø 5 mm Ø 0.197 in
Torque	0.8 - 1 N.m 7.1 - 8.9 lb.in

The connecting capacity data for one Rigid: Solid/Stranded, or one Flexible conductor (when applicable) is a mandatory information required by IEC, UL and CSA standards (Copper conductors). All other data are provided as supplementary information only. For more details, please consult our CB, UL or CSA certificates and technical datasheet available on http://www.TE.com

CE RoHS USR CSA Gost R

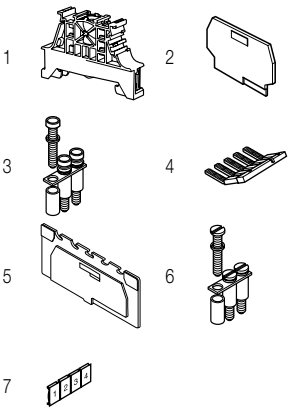

Accessories

	Description			Color	Type	Part Number		Pkg pce	Weight (1 pce) g
1	End stops	10 mm	0.394 in	Dark grey	BAM4	1SNK900001R0000		50	14.00
		9 mm	0.354 in		BAZ1	1SNK900002R0000		50	4.70
2	End sections	1 mm	0.039 in	Grey	FEMT2	1SNA113629R2700		10	2.00
3	Jumper bars	20 poles	41 A		BJS8-20	1SNA174789R0500		5	3.20
4	Lateral jumper bars	2 poles	50 A	Black	PC8-2	1SNA116538R1700		10	3.00
		3 poles			PC8-3	1SNA116539R1000		10	4.00
		4 poles			PC8-4	1SNA116540R2500		10	6.00
		10 poles			PC8-10	1SNA163313R2400		10	14.00
					PC8-R1	1SNA400711R0600		10	6.60
					PC8-R2	1SNA400712R0700		10	7.84
					PC8-R3	1SNA400713R0000		10	9.00
					PC8-R4	1SNA400724R0300		10	4.50
5	Circuit separators	3 mm	0.118 in	Grey	SCFT2	1SNA114522R0500		20	
6	Fastening kits	Sub assembly post + screw + washer			EV8S	1SNA168401R0300		20	3.00
7	Terminal block markers	Blank card		White	RC810	1SNA234000R0200		1	8.20

Complete list of accessories is indicated in the terminal block datasheet.
Some accessories such as jumper bars may modify the terminal block's ratings: complete information in the accessories catalogue pages.

1SNC161069S0201

Technical data valid for copper conductors only.

M6/8.ST screw clamp terminal blocks

Test disconnect with a screwdriver sliding link - 8 mm 0.315 in spacing

6 mm²
8 AWG

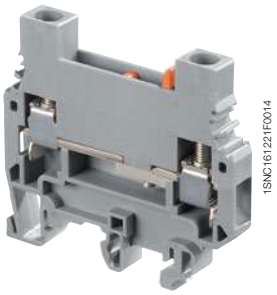

M6/8.ST

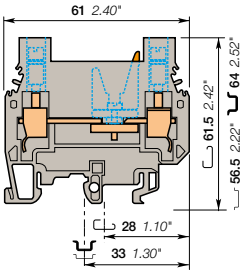

8 mm 0.315 in spacing

Description

- Compact disconnect terminal blocks:
- Secure your disconnect operations with the disconnect orange sliding link operated with a screwdriver,
- Ease your test operations with the two built-in test sockets screws compatible with DIA 4 mm 0.157 in test plugs.

Ordering details

Description		Color	Type	Part Number		Pkg pce	Weight (1 pce) g
Disconnect	With 2 test sockets DIA 4 mm 0.157 in	Grey	M6/8.STA	1SNA115359R0200		25	30.00

Main technical data

		IEC	UL	CSA
1 conductor per clamp	Rigid: Solid/Stranded	0.5-10 mm²	22 - 8 AWG	
	Flexible without ferrule	0.5-6 mm²		
	Flexible with insulated ferrule			
	Gauge	A5		
Rated current / Rated cross section		30 A / 6 mm²	50 A / 8 AWG	
Rated short-time withstand current (1s)		480 A		
Rated voltage		500 V	600 V	
Impulse withstand voltage				
Protection		IP20	NEMA 1	

Mounting instructions

Rail		G32, TH 35-7.5, TH 35-15
Wire stripping length		11 mm 0.43 in
Screw clamp Tool		Flat screwdriver Ø 5.5 mm Ø 0.217 in
Torque		0.8 - 1 N.m 7.1 - 8.9 lb.in
Disconnect device Tool		Flat screwdriver Ø 4 mm Ø 0.157 in
Torque		0.4 - 0.6 N.m 3.5 - 5.3 lb.in

The connecting capacity data for one Rigid: Solid/Stranded, or one Flexible conductor (when applicable) is a mandatory information required by IEC, UL and CSA standards (Copper conductors). All other data are provided as supplementary information only. For more details, please consult our CB, UL or CSA certificates and technical datasheet available on http://www.TE.com

CE RoHS USR Gost R

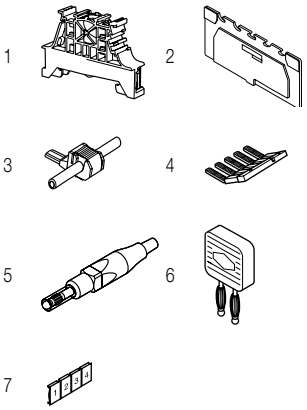

Accessories

	Description			Color	Type	Part Number		Pkg pce	Weight (1 pce) g
1	**End stops**	10 mm	0.394 in	Dark grey	BAM4	1SNK900001R0000		50	14.00
		9 mm	0.354 in		BAZ1	1SNK900002R0000		50	4.70
2	**End sections**	3 mm	0.118 in	Grey	FEMT4	1SNA114778R0500		10	5.60
					FEMSTA	1SNA116979R2100		10	3.60
3	**Jumper bars**	1 poles	24 A	Grey	AD2.5	1SNA114205R2000		50	1.60
4	**Lateral jumper bars**	2 poles	50 A	Black	PC8-2	1SNA116538R1700		10	3.00
		3 poles			PC8-3	1SNA116539R1000		10	4.00
		4 poles			PC8-4	1SNA116540R2500		10	6.00
		10 poles			PC8-10	1SNA163313R2400		10	14.00
5	**Test plugs**	DIA 4 mm 0.157 in IP20		Red	FC4-1	1SNA167927R1000		10	11.00
6	**Short circuit plugs**				BP8.A4	1SNA173888R2000		10	
7	**Terminal block markers**	Blank card		White	RC810	1SNA234000R0200		1	8.20

Complete list of accessories is indicated in the terminal block datasheet.
Some accessories such as jumper bars may modify the terminal block's ratings: complete information in the accessories catalogue pages.

1SNC161031S0201

Technical data valid for copper conductors only.

D6/10.SNBTB screw clamp terminal blocks

Test disconnect with blade - 10 mm 0.394 in spacing

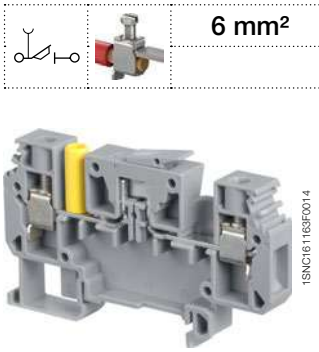

D6/10.SNBTB

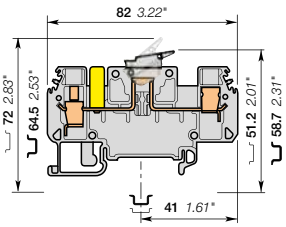

10 mm 0.394 in spacing

6 mm²

Description

- Ease your disconnect operations with the disconnect blade,
- Ease your test operations with built-in test sockets compatible with DIA 4 mm 0.157 in test plugs.

Ordering details

Description		Color	Type	Part Number		Pkg pce	Weight (1 pce) g
Disconnect	With 1 isolated test socket DIA 4 mm 0.157 in	Grey	D6/10.SNBTB1	1SNA115928R1500		20	25.00

Main technical data

		IEC	UL	CSA
1 conductor per clamp	Rigid: Solid/Stranded	0.5-10 mm²		
	Flexible without ferrule	0.5-6 mm²		
	Flexible with insulated ferrule			
	Gauge	A5		
Rated current / Rated cross section		15 A / 6 mm²		
Rated short-time withstand current (1s)		720 A		
Rated voltage		500 V		
Impulse withstand voltage		6000 V		
Protection		IP20	NEMA 1	

Mounting instructions

Rail	G32, TH 35-7.5, TH 35-15
Wire stripping length	12 mm 0.47 in
Tool	Flat screwdriver Ø 4 mm Ø 0.157 in
Torque	0.8 N.m 7.1 lb.in

The connecting capacity data for one Rigid: Solid/Stranded, or one Flexible conductor (when applicable) is a mandatory information required by IEC, UL and CSA standards (Copper conductors). All other data are provided as supplementary information only. For more details, please consult our CB, UL or CSA certificates and technical datasheet available on http://www.TE.com

CE RoHS Gost R

Accessories

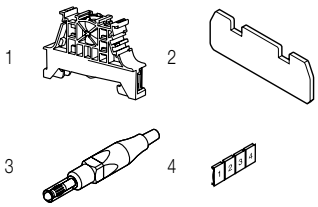

	Description			Color	Type	Part Number		Pkg pce	Weight (1 pce) g
1	**End stops**	10 mm	0.394 in	Dark grey	BAM4	1SNK900001R0000		50	14.00
		5.2 mm	0.205 in		BAZ1	1SNK900002R0000		50	5.30
2	**End sections**	2 mm	0.079 in	Grey	FED10S1	1SNA215999R2100		20	3.35
3	**Test plugs**	DIA 4 mm 0.157 in IP20		Red	FC4-1	1SNA167927R1000		10	11.00
4	**Terminal block markers**	Blank card		White	RC1010	1SNA238000R1600		1	1.30

Complete list of accessories is indicated in the terminal block datasheet.
Some accessories such as jumper bars may modify the terminal block's ratings: complete information in the accessories catalogue pages.

Technical data valid for copper conductors only.

1SNC161154S0201 - Rev. A

D6/10.SNBTB screw clamp terminal blocks

Test disconnect with blade - 10 mm 0.394 in spacing

6 mm²

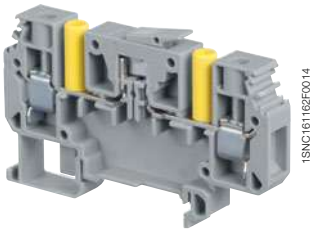

D6/10.SNBTB

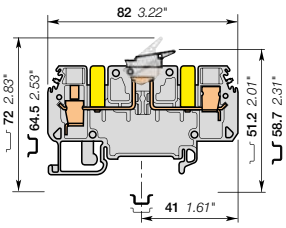

10 mm 0.394 in spacing

Description

- Ease your disconnect operations with the disconnect blade,
- Ease your test operations with built-in test sockets compatible with DIA 4 mm 0.157 in test plugs.

Ordering details

Description		Color	Type	Part Number		Pkg pce	Weight (1 pce) g
Disconnect	With 2 isolated test sockets DIA 4 mm 0.157 in	Grey	D6/10.SNBTB2	1SNA115929R1600		20	25.00

Main technical data

		IEC	UL	CSA
1 conductor per clamp	Rigid: Solid/Stranded	0.5-10 mm²		
	Flexible without ferrule	0.5-6 mm²		
	Flexible with insulated ferrule			
	Gauge	A5		
Rated current / Rated cross section		15 A / 6 mm²		
Rated short-time withstand current (1s)		720 A		
Rated voltage		500 V		
Impulse withstand voltage		6000 V		
Protection		IP20	NEMA 1	

Mounting instructions

Rail	G32, TH 35-7.5, TH 35-15
Wire stripping length	12 mm 0.47 in
Tool	Flat screwdriver Ø 4 mm Ø 0.157 in
Torque	0.8 N.m 7.1 lb.in

The connecting capacity data for one Rigid: Solid/Stranded, or one Flexible conductor (when applicable) is a mandatory information required by IEC, UL and CSA standards (Copper conductors). All other data are provided as supplementary information only. For more details, please consult our CB, UL or CSA certificates and technical datasheet available on http://www.TE.com

CE RoHS Gost R

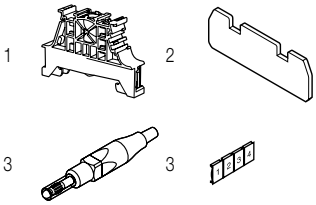

Accessories

	Description			Color	Type	Part Number		Pkg pce	Weight (1 pce) g
1	**End stops**	10 mm	0.394 in	Dark grey	BAM4	1SNK900001R0000		50	14.00
		5.2 mm	0.205 in		BAZ1	1SNK900002R0000		50	5.30
2	**End sections**	2 mm	0.079 in	Grey	FED10S1	1SNA215999R2100		20	3.35
3	**Test plugs**	DIA 4 mm 0.157 in IP20		Red	FC4-1	1SNA167927R1000		10	11.00
4	**Terminal block markers**	Blank card		White	RC1010	1SNA238000R1600		1	1.30

Complete list of accessories is indicated in the terminal block datasheet.
Some accessories such as jumper bars may modify the terminal block's ratings: complete information in the accessories catalogue pages.

Technical data valid for copper conductors only.

1SNC161155S0201 - Rev. A

M4/6.ST screw clamp terminal blocks

Test disconnect with plug - 6 mm 0.236 in spacing

M4/6.ST

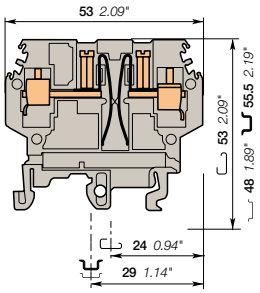

6 mm 0.236 in spacing

	4 mm²
	12 AWG

Description

- Test disconnect terminal blocks operated with plug,
- Dedicated "make before break" plug for current circuit (green plug) or "break before make" for voltage circuit (red plug).

Ordering details

Description		Color	Type	Part Number		Pkg pce	Weight (1 pce) g
Disconnect	Tinned contact blades	Grey	M4/6.ST.Sn	1SNA115313R1400		20	14.00
	Gold contact blades		M4/6.ST.Au	1SNA115314R1500		20	14.00

Main technical data

		IEC	UL	CSA
1 conductor per clamp	Rigid: Solid/Stranded	0.5 - 4 mm²		22-12 AWG
	Flexible without ferrule	0.5 - 4 mm²		
	Flexible with insulated ferrule			
	Gauge	A4		
Rated current / Rated cross section		5 A / 4 mm²		5 A / 12 AWG
Rated short-time withstand current (1s)		480 A		
Rated voltage		500 V		150 V
Impulse withstand voltage				
Protection		IP10	NEMA	

Mounting instructions

Rail	G32, TH 35-7.5, TH 35-15
Wire stripping length	9.5 mm 0.374 in
Tool	Flat screwdriver Ø 4 mm Ø 0.157 in
Torque	0.5 - 0.8 Nm 4.4 - 7.1 lb.in

The connecting capacity data for one Rigid: Solid/Stranded, or one Flexible conductor (when applicable) is a mandatory information required by IEC, UL and CSA standards (Copper conductors). All other data are provided as supplementary information only. For more details, please consult our CB, UL or CSA certificates and technical datasheet available on http://www.TE.com

CE RoHS CSA Gost R

Utilization of each type of plug

Number of operations: 200
On request, the plugs can be replaced by an insertable printed circuit for diagnosis testing.

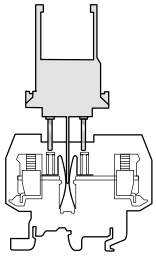

BNT1 ("voltage" plug)

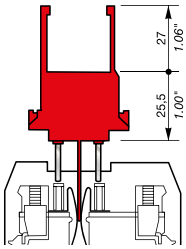

1st step: the plug cuts the circuit.
2nd step: the test circuit connection is made.

BNT2 ("polarity" plug)

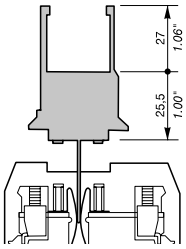

Plug not equipped with pins cuts the circuit.

BNT3 ("current" plug)

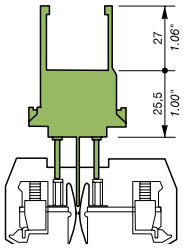

1st step: the test circuit is established
2nd step: the plug opens the circuit.

Accessories

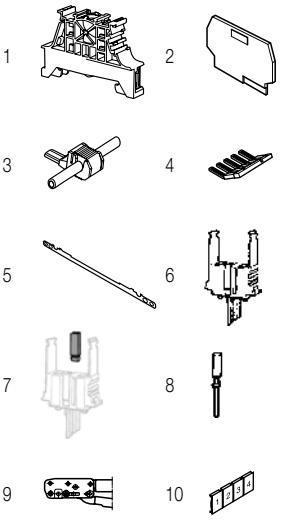

	Description			Color	Type	Part Number		Pkg pce	Weight (1 pce) g
1	**End stops**	10 mm	0.394 in	Dark grey	BAM4	1SNK900001R0000		50	14.00
		5.2 mm	0.205 in		BAZ1	1SNK900002R0000		50	5.30
2	**End sections**	2.5 mm	0.098 in	Grey	FEMT3	1SNA114328R2200		20	2.70
3	**Jumper bars**	1 poles	24 A	Grey	AD2.5	1SNA114205R2000		50	1.60
4	**Lateral jumper bars**	10 poles	35 A		PC61-10	1SNA163311R2200		10	5.00
5	**Shield connectors**				CBM5	1SNA178745R1400		50	
6	**Short circuit plugs**	"Polarity" plug		Grey	BNT2	1SNA114329R2300		20	3.00
		"Voltage" plug		Red	BNT1	1SNA199135R1700		20	8.00
		"Current" plug		Green	BNT3	1SNA199136R1000		20	8.00
7	**Assembly pins for plugs**				CVABM	1SNA183436R0500		10	0.40
8	**Pins**	0.5 mm²	24-20 AWG		BRC-0.5	1SNA174558R0500		10	1.40
		1 mm²	18 AWG		BRC-1	1SNA173906R2200		10	2.00
		1.5 mm²	16 AWG		BRC-1.5	1SNA173907R2300		10	2.00
		2.5 mm²	14 AWG		BRC-2.5	1SNA173908R0400		10	2.00
		4 mm²	12 AWG		BRC-4	1SNA174601R0100		10	2.00
9	**Tools**	Connecting capacity: 1 to 2.5 mm²			PSC	1SNA173181R1300		1	
10	**Terminal block markers**	Blank card		White	RC610	1SNA233000R0100		1	7.50

Complete list of accessories is indicated in the terminal block datasheet.
Some accessories such as jumper bars may modify the terminal block's ratings: complete information in the accessories catalogue pages.

Technical data valid for copper conductors only.

1SNC161140S0201 - Rev. A

M10/10.ST-Sn screw clamp terminal blocks

Test disconnect with plug - 10 mm 0.394 in spacing

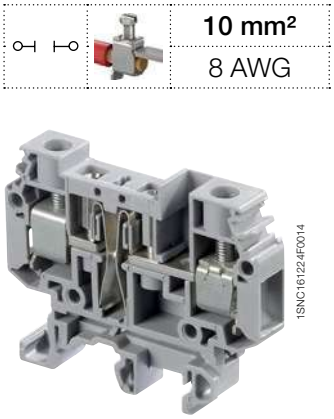

M10/10.ST-Sn

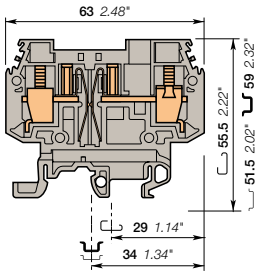

10 mm 0.394 in spacing

10 mm²	8 AWG

Description

- Test disconnect terminal blocks operated with plug,
- Dedicated "make before break" plug for current circuit (green plug) or "break before make" for voltage circuit (red plug).

Ordering details

Description		Color	Type	Part Number		Pkg pce	Weight (1 pce) g
Disconnect	Tinned contact blades	Grey	M10/10.ST-Sn	1SNA115539R1700		20	27.00

Main technical data

		IEC	UL	CSA
1 conductor per clamp	Rigid: Solid/Stranded	0.5-16 mm²		8 AWG
	Flexible without ferrule	0.5-10 mm²		
	Flexible with insulated ferrule			
	Gauge	B6		
Rated current / Rated cross section		15 A / 10 mm²		10 A / 8 AWG
Rated short-time withstand current (1s)		1200 A		
Rated voltage		500 V		300 V
Impulse withstand voltage				
Protection		IP20	NEMA 1	

Mounting instructions

Rail	G32, TH 35-7.5, TH 35-15
Wire stripping length	12 mm 0.472 in
Tool	Flat screwdriver Ø 5.5 - 6 mm Ø 0.217 - 0.236 in
Torque	1.2 - 1.4 Nm 10.6 - 12.3 lb.in

The connecting capacity data for one Rigid: Solid/Stranded, or one Flexible conductor (when applicable) is a mandatory information required by IEC, UL and CSA standards (Copper conductors). All other data are provided as supplementary information only. For more details, please consult our CB, UL or CSA certificates and technical datasheet available on http://www.TE.com

CE RoHS CSA Gost R

Utilization of each type of plug

Number of operations: 200
On request, the plugs can be replaced by an insertable printed circuit for diagnosis testing.

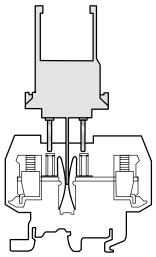

BNT1 ("voltage" plug)

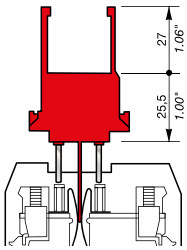

1st step: the plug cuts the circuit.
2nd step: the test circuit connection is made.

BNT2 ("polarity" plug)

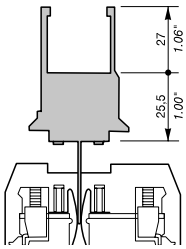

Plug not equipped with pins cuts the circuit.

BNT3 ("current" plug)

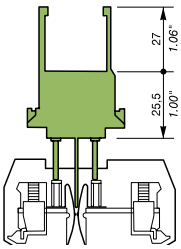

1st step: the test circuit is established
2nd step: the plug opens the circuit.

Accessories

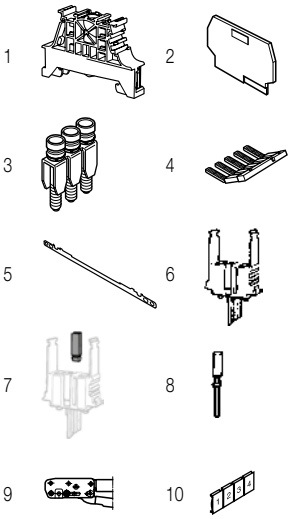

	Description			Color	Type	Part Number		Pkg pce	Weight (1 pce) g
1	**End stops**	10 mm	0.394 in	Dark grey	BAM4	1SNK900001R0000		50	14.00
		5.2 mm	0.205 in		BAZ1	1SNK900002R0000		50	5.30
2	**End sections**	2.5 mm	0.098 in	Grey	FEMT5	1SNA116781R1300		20	3.00
3	**Jumper bars**	2 poles	57 A		BJMI10-2	1SNA176675R0400		10	5.00
		3 poles			BJMI10-3	1SNA176676R0500		10	8.00
		4 poles			BJMI10-4	1SNA176677R0600		10	11.00
		5 poles			BJMI10-5	1SNA176678R1700		10	13.00
		10 poles			BJMI10-10	1SNA176679R1000		10	27.00
4	**Lateral jumper bars**	10 poles	70 A		PC10-10	1SNA163315R2600		10	23.00
5	**Shield connectors**				CBM5	1SNA178745R1400		50	
6	**Short circuit plugs**	"Polarity" plug		Grey	BNT2	1SNA114329R2300		20	3.00
		"Voltage" plug		Red	BNT1	1SNA199135R1700		20	8.00
		"Current" plug		Green	BNT3	1SNA199136R1000		20	8.00
7	**Assembly pins for plugs**				CVABM1	1SNA116783R1500		20	
8	**Pins**	0.5 mm²	24-20 AWG		BRC-0.5	1SNA174558R0500		10	1.40
		1 mm²	18 AWG		BRC-1	1SNA173906R2200		10	2.00
		1.5 mm²	16 AWG		BRC-1.5	1SNA173907R2300		10	2.00
		2.5 mm²	14 AWG		BRC-2.5	1SNA173908R0400		10	2.00
		4 mm²	12 AWG		BRC-4	1SNA174601R0100		10	2.00
9	**Tools**	Connecting capacity: 1 to 2.5 mm²			PSC	1SNA173181R1300		1	
10	**Terminal block markers**	Blank card		White	RC1010	1SNA238000R1600		1	1.30

Complete list of accessories is indicated in the terminal block datasheet.
Some accessories such as jumper bars may modify the terminal block's ratings: complete information in the accessories catalogue pages.

Technical data valid for copper conductors only.

1SNC161147S0201 - Rev. A

M6/8.STP screw clamp terminal blocks

Disconnect with push-turn knob - with test socket - 8 mm 0.315 in spacing

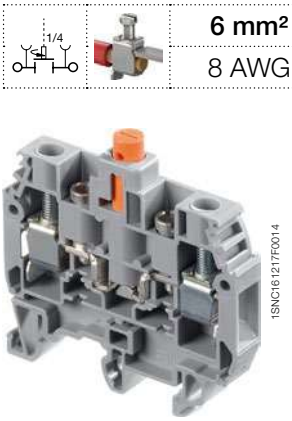

6 mm²
8 AWG

M6/8.STP

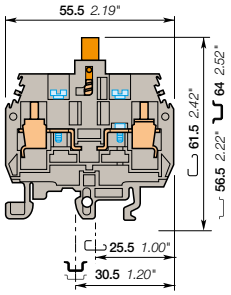

8 mm 0.315 in spacing

Description

- Ease your disconnect operations with the disconnect ¼ turn push-turn knob,
- Possibility to seal in the open and closed position,
- Ease your test operations with the built-in test socket.

Ordering details

Description		Color	Type	Part Number		Pkg qty	Weight (1 pce) g
Disconnect	With 2 test sockets DIA 4 mm 0.157 in	Grey, orange	M6/8.STP1	1SNA115529R1500		25	21.00

Main technical data

Connecting capacity		IEC	UL	CSA
1 conductor per clamp	Rigid: Solid/Stranded	0.5-10 mm²		8 AWG
	Flexible without ferrule	0.5-6 mm²		
	Flexible with insulated ferrule			
	Gauge			
Rated current / Rated cross section		15 A / 6 mm²		15 A / 8 AWG
Rated short-time withstand current (1s)		720 A		
Rated voltage		500 V		600 V
Impulse withstand voltage				
Protection		IP10	NEMA	

Mounting instructions

Rail	G32, TH 35-7.5, TH 35-15
Wire stripping length	11 mm 0.433 in
Tool	Flat screwdriver Ø 4 mm Ø 0.157 in
Torque	0.8 - 1 N.m 7.1 - 8.9 lb.in

The connecting capacity data for one Rigid: Solid/Stranded, or one Flexible conductor (when applicable) is a mandatory information required by IEC, UL and CSA standards (Copper conductors). All other data are provided as supplementary information only. For more details, please consult our CB, UL or CSA certificates and technical datasheet available on http://www.TE.com

RoHS CSA Gost R

Notes

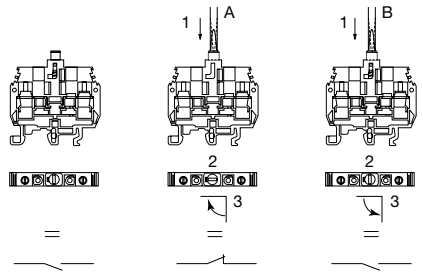

A: Closing operation
B: Opening operation
1: Push
2: Turn
3: Stop

Accessories

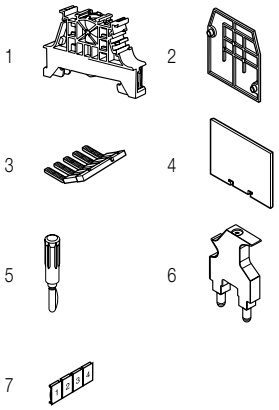

	Description			Color	Type	Part Number		Pkg qty	Weight (1 pce) g
1	**End stops**	10 mm	0.394 in	Dark grey	BAM4	1SNK900001R0000		50	14.00
		9 mm	0.354 in		BAZ1	1SNK900002R0000		50	4.70
2	**End sections**	2.8 mm	0.110 in	Grey	FEMT1	1SNA113137R0200		50	2.00
3	**Lateral jumper bars**	2 poles	50 A		PC8-2	1SNA116538R1700		10	3.00
		3 poles			PC8-3	1SNA116539R1000		10	4.00
		4 poles			PC8-4	1SNA116540R2500		10	6.00
		10 poles			PC8-10	1SNA163313R2400		10	14.00
4	**Circuit separators**	1 mm	0.039 in	Grey	SCFT1	1SNA103588R2600		20	20.00
5	**Test plugs**	DIA 4 mm 0.157 in		White	FC4	1SNA167860R0100		10	10.00
		DIA 4 mm 0.157 in IP20		Red	FC4-1	1SNA167927R1000		10	11.00
6	**Short circuit plugs**	DIA 4 mm 0.157 in			BP8.A4	1SNA173888R2000		10	
				Red	BNSTP2	1SNA196789R2400		20	10.00
		With test DIA 4 mm 0.157 in		Beige	BNSTP1	1SNA196792R1700		20	14.00
7	**Terminal block markers**	Blank card		White	RC810	1SNA234000R0200		1	8.20

Complete list of accessories is indicated in the terminal block datasheet.
Some accessories such as jumper bars may modify the terminal block's ratings: complete information in the accessories catalogue pages.

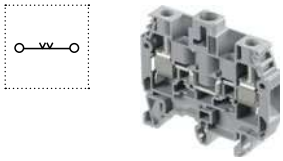

Feed-through screw clamp terminal blocks

Description		Color	Type	Part Number		Pkg qty	Weight (1 pce) g
Feed-through	Profile aligned with M6/8 STP...	Grey	M6/8.STP3	1SNA115500R2500		25	21.00

Technical data valid for copper conductors only.

M6/8.STP screw clamp terminal blocks

Disconnect with push-turn knob - with test socket - 8 mm 0.315 in spacing

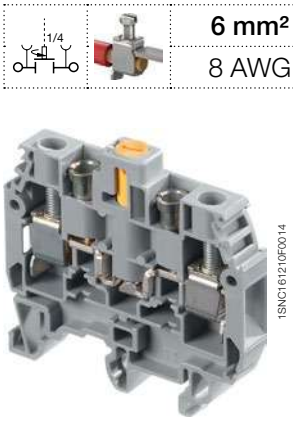

6 mm²
8 AWG

M6/8.STP

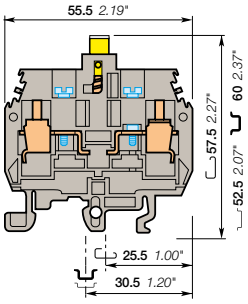

8 mm 0.315 in spacing

Description

- Ease your disconnect operations with the disconnect ¼ turn push-turn knob,
- Possibility to seal in the open position,
- Ease your test operations with the built-in test socket.

Ordering details

Description		Color	Type	Part Number		Pkg qty	Weight (1 pce) g
Disconnect	With 2 test sockets DIA 4 mm 0.157 in	Grey, yellow	M6/8.STP	1SNA115277R2000		25	21.00
		Grey, black	M6/8.STP	1SNA105141R2700		25	21.00
		Grey, red	M6/8.STP	1SNA105142R2000		25	21.00

Main technical data

Connecting capacity		IEC	UL	CSA
1 conductor per clamp	Rigid: Solid/Stranded	0.5-10 mm²	22-8 AWG	8 AWG
	Flexible without ferrule	0.5-6 mm²		
	Flexible with insulated ferrule			
	Gauge			
Rated current / Rated cross section		15 A / 6 mm²	40 A / 8 AWG	15 A / 8 AWG
Rated short-time withstand current (1s)		180 A		
Rated voltage		500 V	600 V	600 V
Impulse withstand voltage				
Protection		IP10	NEMA	

Mounting instructions

Rail		G32, TH 35-7.5, TH 35-15
Wire stripping length		11 mm 0.433 in
Tool		Flat screwdriver Ø 4 mm Ø 0.157 in
Torque		0.8 - 1 N.m 7.1 - 8.9 lb.in

The connecting capacity data for one Rigid: Solid/Stranded, or one Flexible conductor (when applicable) is a mandatory information required by IEC, UL and CSA standards (Copper conductors). All other data are provided as supplementary information only. For more details, please consult our CB, UL or CSA certificates and technical datasheet available on http://www.TE.com

RoHS USR CSA Gost R

Notes

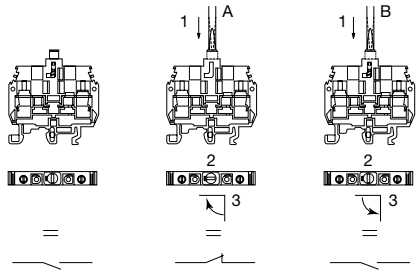

A: Closing operation
B: Opening operation
1: Push
2: Turn
3: Stop

Accessories

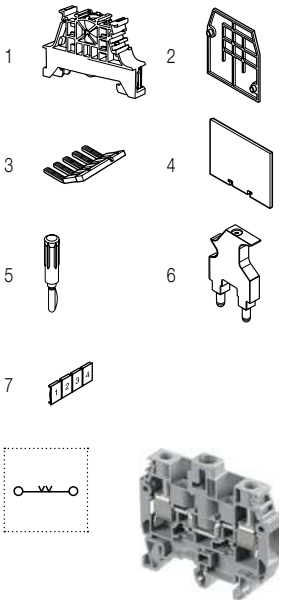

	Description			Color	Type	Part Number		Pkg qty	Weight (1 pce) g
1	**End stops**	10 mm	0.394 in	Dark grey	BAM4	1SNK900001R0000		50	14.00
		9 mm	0.354 in		BAZ1	1SNK900002R0000		50	4.70
2	**End sections**	2.8 mm	0.110 in	Grey	FEMT1	1SNA113137R0200		50	2.00
3	**Lateral jumper bars**	2 poles	50 A		PC8-2	1SNA116538R1700		10	3.00
		3 poles			PC8-3	1SNA116539R1000		10	4.00
		4 poles			PC8-4	1SNA116540R2500		10	6.00
		10 poles			PC8-10	1SNA163313R2400		10	14.00
4	**Circuit separators**	1 mm	0.039 in	Grey	SCFT1	1SNA103588R2600		20	20.00
5	**Test plugs**	DIA 4 mm 0.157 in		White	FC4	1SNA167860R0100		10	10.00
		DIA 4 mm 0.157 in IP20		Red	FC4-1	1SNA167927R1000		10	11.00
6	**Short circuit plugs**	DIA 4 mm 0.157 in			BP8.A4	1SNA173888R2000		10	
				Red	BNSTP2	1SNA196789R2400		20	10.00
		With test DIA 4 mm 0.157 in		Beige	BNSTP1	1SNA196792R1700		20	14.00
7	**Terminal block markers**	Blank card		White	RC810	1SNA234000R0200		1	8.20

Complete list of accessories is indicated in the terminal block datasheet.
Some accessories such as jumper bars may modify the terminal block's ratings: complete information in the accessories catalogue pages.

Feed-through screw clamp terminal blocks

Description		Color	Type	Part Number		Pkg qty	Weight (1 pce) g
Feed-through	Profile aligned with M6/8 STP...	Grey	M6/8.STP3	1SNA115500R2500		25	21.00

Technical data valid for copper conductors only.

D6/8.ST.RS spring loaded screw clamp terminal blocks

Test disconnect with a screwdriver sliding link - 8 mm 0.315 in spacing

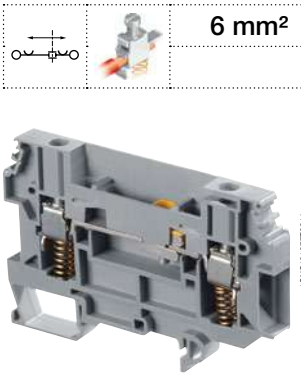

6 mm²

1SNC161277F0014

D6/8.ST.RS

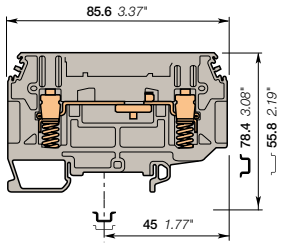

8 mm 0.315 in spacing

Description

- Mainly dedicated to energy markets for security purposes on CT circuits,
- Security: specific shape in linking bar to lock the ferrule, spring clamp can maintain contact pressure even if screw clamp is loose.

Ordering details

Description	Color	Type	Part Number		Pkg pce	Weight (1 pce) g
Disconnect	Grey	D6/8.ST.RS	1SNA115914R0700		32	28.00

Main technical data

		IEC	BS TS 5018	CSA
1 conductor per clamp	Rigid: Solid/Stranded	0.5-10 mm²		
	Flexible without ferrule	0.5-6 mm²		
	Flexible with insulated ferrule			
Lugs	Flexible with insulated ferrule		0.28-2.5 mm²	
	Gauge	A5		
Rated current / Rated cross section		24 A / 6 mm²		
Rated short-time withstand current (1s)		720 A		
Rated voltage		400 V		
Impulse withstand voltage		6000 V		
Protection			NEMA	

Mounting instructions

Rail		G32, TH 35-7.5, TH 35-15
Wire stripping length		16 mm 0.51 in
Tool		Flat screwdriver Ø 3.5 mm Ø 0.138 in
Torque		0.8 - 1 Nm 7.1 - 8.9 lb.in

The connecting capacity data for one Rigid: Solid/Stranded, or one Flexible conductor (when applicable) is a mandatory information required by IEC, UL and CSA standards (Copper conductors). All other data are provided as supplementary information only. For more details, please consult our CB, UL or CSA certificates and technical datasheet available on http://www.TE.com

CE RoHS Gost R

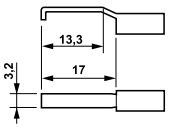

Each screw clamp holds up to 2 bent lugs as shown (not supplied)

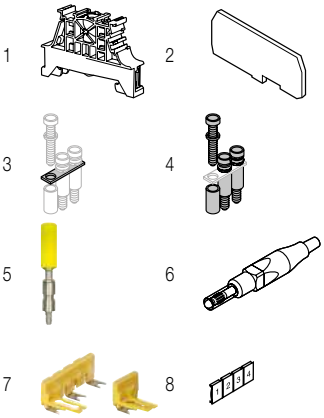

Accessories

	Description			Color	Type	Part Number		Pkg pce	Weight (1 pce) g
1	End stops	End stops	0.394 in	Dark grey	BAM4	1SNK900001R0000		50	14.00
			0.205 in		BAZ1	1SNK900002R0000		50	5.30
2	End sections	1 mm	0.039 in	Grey	FEM8T6	1SNA215266R0100		10	4.40
3	Jumper bars	2 poles	41 A		BJS8	1SNA164581R1300		10	3.10
		3 poles				1SNA164582R1400		10	3.10
		4 poles				1SNA164583R1500		10	3.10
		20 poles			BJS8-20	1SNA174789R0500		5	3.20
4	Fastening kits	Sub assembly post + screw + washer			EV6I	1SNA206394R0200		20	2.00
5	Test sockets	DIA 4 mm 0.157 in IP20		Yellow	AJS9	1SNA179726R0200		25	3.60
				Black	AJS9-1	1SNA206680R1500		25	3.60
				Green	AJS9-2	1SNA206681R0200		25	3.60
				Grey	AJS9-3	1SNA206682R0300		25	3.60
				Blue	AJS9-4	1SNA206683R0400		25	3.60
				Red	AJS9-5	1SNA206720R1400		25	3.60
		DIA 4 mm 0.157 in			AL4-M3	1SNA206721R0100		50	1.10
6	Test plugs	DIA 4 mm 0.157 in IP20		Red	FC4-1	1SNA167927R1000		10	11.00
7	Short circuit bridges	2 poles		Yellow	SC-JB8-2	1SNK900652R0000		25	2.00
		3 poles			SC-JB8-3	1SNK900653R0000		25	3.40
		4 poles			SC-JB8-4	1SNK900654R0000		25	4.70
8	Terminal block markers	Blank card		White	RC810	1SNA234000R0200		1	8.20

Complete list of accessories is indicated in the terminal block datasheet.
Some accessories such as jumper bars may modify the terminal block's ratings: complete information in the accessories catalogue pages.

Technical data valid for copper conductors only.

1SNC161153S0201 - Rev. A

D6/8.ST.RS spring loaded screw clamp terminal blocks

Test disconnect with a screwdriver sliding link - 8 mm 0.315 in spacing

6 mm²

1SNC161233F0014

D6/8.ST.RS

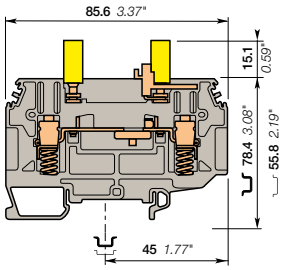

8 mm 0.315 in spacing

Description

- Mainly dedicated to energy markets for security purposes on CT circuits,
- Security: specific shape in linking bar to lock the ferrule, spring clamp can maintain contact pressure even if screw clamp is loose.

Ordering details

Description		Color	Type	Part Number		Pkg pce	Weight (1 pce) g
Disconnect	With 2 yellow test sockets DIA 4 mm 0.157 in	Grey	D6/8.ST1.RS.IP20	1SNA115831R0400		32	38.00

Main technical data

		IEC	BS TS 5018	CSA
1 conductor per clamp	Rigid: Solid/Stranded	0.5-10 mm²		
	Flexible without ferrule	0.5-6 mm²		
	Flexible with insulated ferrule			
Lugs	Flexible with insulated ferrule		0.28-2.5 mm²	
	Gauge	A5		
Rated current / Rated cross section		24 A / 6 mm²		
Rated short-time withstand current (1s)		720 A		
Rated voltage		400 V		
Impulse withstand voltage		6000 V		
Protection			NEMA	

Mounting instructions

Rail	G32, TH 35-7.5, TH 35-15
Wire stripping length	16 mm 0.51 in
Screw clamp Tool	Flat screwdriver Ø 3.5 mm Ø 0.138 in
Torque	0.8 - 1 Nm 7.1 - 8.9 lb.in
Disconnect device Tool	Flat screwdriver Ø 3.5 mm Ø 0.138 in
Torque	0.4 - 0.6 N.m 3.5 - 5.3 lb.in
Test socket Tool	Ø 3.5 mm Ø 0.138 in
Torque	0.6 N.m 5.34 lb.in

The connecting capacity data for one Rigid: Solid/Stranded, or one Flexible conductor (when applicable) is a mandatory information required by IEC, UL and CSA standards (Copper conductors). All other data are provided as supplementary information only. For more details, please consult our CB, UL or CSA certificates and technical datasheet available on http://www.TE.com

CE RoHS Gost R

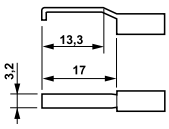

Each screw clamp holds up to 2 bent lugs as shown (not supplied)

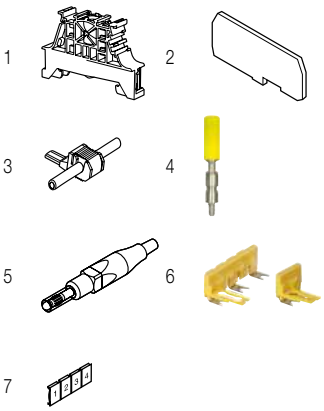

Accessories

	Description			Color	Type	Part Number		Pkg pce	Weight (1 pce) g
1	**End stops**	10 mm	0.394 in	Dark grey	BAM4	1SNK900001R0000		50	14.00
		5.2 mm	0.205 in		BAZ1	1SNK900002R0000		50	5.30
2	**End sections**	1 mm	0.039 in	Grey	FEM8T6	1SNA215266R0100		10	4.40
3	**Jumper bars**	1 poles	24 A	Grey	AD2.5	1SNA114205R2000		50	1.60
4	**Test sockets**	DIA 4 mm 0.157 in IP20		Black	AJS9-1	1SNA206680R1500		25	3.60
				Green	AJS9-2	1SNA206681R0200		25	3.60
				Grey	AJS9-3	1SNA206682R0300		25	3.60
				Blue	AJS9-4	1SNA206683R0400		25	3.60
				Red	AJS9-5	1SNA206720R1400		25	3.60
5	**Test plugs**	DIA 4 mm 0.157 in IP20		Red	FC4-1	1SNA167927R1000		10	11.00
6	**Short circuit bridges**	2 poles		Yellow	SC-JB8-2	1SNK900652R0000		25	2.00
		3 poles			SC-JB8-3	1SNK900653R0000		25	3.40
		4 poles			SC-JB8-4	1SNK900654R0000		25	4.70
7	**Terminal block markers**	Blank card		White	RC810	1SNA234000R0200		1	8.20

Complete list of accessories is indicated in the terminal block datasheet.
Some accessories such as jumper bars may modify the terminal block's ratings: complete information in the accessories catalogue pages.

Technical data valid for copper conductors only.

1SNC161095S0201 - Rev. A

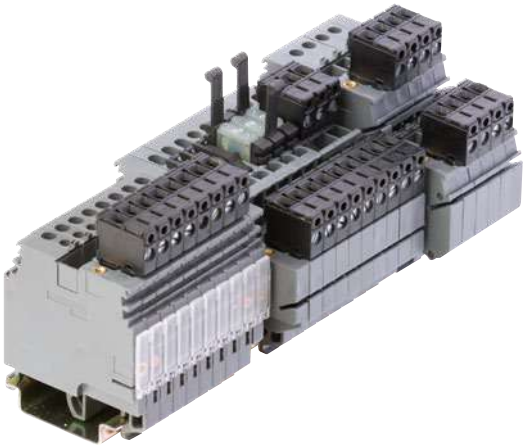

1SNC164011S0201

Dedicated applications terminal blocks
Pluggable

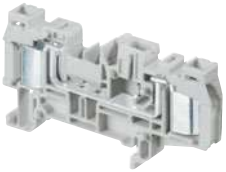

Technologies presentation			174
Overview			175

Screw clamp technology

Feed-through

2.5 mm² / 12 AWG	**MA2.5/5-CPE**		176
	MA2.5/5-2CPE		178

Double deck

2.5 mm² / 12 AWG	**MA2.5/5D2-2CPE**	2 feed-through circuits	180
	MA2.5/5.D-2CPE	1 feed-through circuit	181

Disconnect with blade

2.5 mm² / 12 AWG	**MA2.5/5-SNB-CPE**		182

ADO technology

Feed-through

1.5 mm² / 16 AWG	**D1.5/7.ADO-CPE**	1 ADO - 1 pluggable	183
	D1.5/7.2ADO-CPE	2 ADO - 1 pluggable	185
2.5 mm² / 14 AWG	**D2.5/7.ADO-CPE**	1 ADO - 1 pluggable	184
	D2.5/7.2ADO-CPE	2 ADO - 1 pluggable	186

1SNC164011S0201

Optimize your equipment assembly process!

TE connectivity's pluggable terminal blocks offer the possibility to use pre-assembled cables and connectors which improve wiring efficiency.
Pluggable technology offers following advantages:

- Wiring can be pre-defined and pre-tested before final assembling
- During assembling, the pre-assembled cables help in saving time (plug & play solution) and reduce wiring errors
- During servicing, rail assemblies or components can be quickly replaced.

The preferred solution for OEM's and panel builders handling cabinets made of multiple separate modules.

CE RoHS ISO 9001

A large choice of solutions and technologies

Screw clamp pluggable technology

TE connectivity's screw clamp pluggable range combines the advantage of a fast connection associated with the standard easy to use screw technology.
The range features various functions such as: feed-through, neutral, double deck, disconnect and fuse.

PI-Spring screwless pluggable technology

Our PI-Spring pluggable range combines fast assembly and fast wiring thanks to our exclusive tool-free direct insertion connection technology.
The range features functions adapted to OEM's applications such as 2 jumper channels for distribution, testing,high density wiring with dual connection on both side.
Find more in out SNK series catalog.

ADO System® screwless pluggable technology

Combines fast assembly with the Fastest and the Most Reliable Connection on the Market.
Our ADO System® range features high ratings 4 mm²/24 A max and high density wiring with dual connection and up to 2 wires per ADO System® connection.

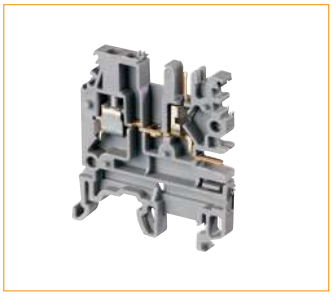

Screw clamp pluggable terminal block

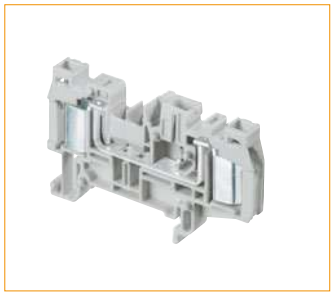

ADO System® pluggable terminal block

1SNC164010S0201

Screw clamp technology

Section		Feed-through		Double deck	
IEC	UL/CSA				
2.5 mm²	12 AWG	MA2.5/5-CPE 5 mm 0.197 in	MA2.5/5-2CPE 5 mm 0.197 in	MA2.5/5D2-2CPE 5 mm 0.197 in	MA2.5/5.D-2CPE 5 mm 0.197 in

Disconnect with blade

Section		
IEC	UL/CSA	
2.5 mm²	12 AWG	MA2.5/5-SNB-CPE 5 mm 0.197 in

ADO technology

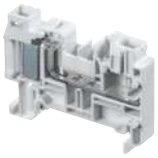
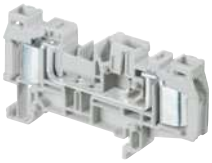

Feed-through

Section			
IEC	UL/CSA		
1.5 mm²	16 AWG	D1.5/7.ADO-CPE 7.62 mm 0.300 in	D1.5/7.2ADO-CPE 7.62 mm 0.300 in
2.5 mm²	14 AWG	D2.5/7.ADO-CPE 7.62 mm 0.300 in	D2.5/7.2ADO-CPE 7.62 mm 0.300 in

1SNC160060S0201

MA2.5/5-CPE pluggable terminal blocks

Feed-through - 5.08 mm 0.200 in spacing

2.5 mm²
12 AWG

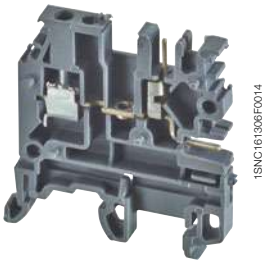

MA2.5/5-CPE

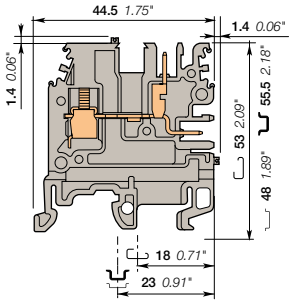

5.08 mm 0.200 in spacing

Description

- Save in flexibility, reliability and simplicity thanks to the pluggable terminal blocks,
- They are particularly well adapted to solve the connecting problems of equipment composed of sub-assemblies (complex machines such as elevators or trains, panel boards with extension boxes...),
- They can then be easily connected through patchcords with CPFT2 plugs connected to the pluggable terminal blocks outputs.

Ordering details

Description		Color	Type	Part Number		Pkg pce	Weight (1 pce) g
Feed-through	1 feed-through circuit	Grey	MA2.5/5-CPE	1SNA400814R0000		50	7.00
		Blue	MA2.5/5-CPE	1SNA400827R0000		50	7.00

Main technical data

		IEC	UL	CSA
1 conductor per clamp	Rigid: Solid/Stranded	0.2-4 mm²	24-12 AWG	
	Flexible without ferrule	0.22-2.5 mm²		
	Flexible with insulated ferrule			
	Gauge	A3		
Rated current / Rated cross section		12 A / 2.5 mm²	10 A / 12 AWG	
Rated short-time withstand current (1s)		300 A		
Rated voltage		320 V	300 V	
Impulse withstand voltage		4000 V		
Protection		IP20	NEMA 1	

Mounting instructions

Rail	G32, TH 35-7.5, TH 35-15
Wire stripping length	8.5 mm 0.33 in
Tool	Flat screwdriver Ø 3.5 mm Ø 0.138 in
Torque	0.4 - 0.6 Nm 3.5 - 5.3 lb.in

The connecting capacity data for one Rigid: Solid/Stranded, or one Flexible conductor (when applicable) is a mandatory information required by IEC, UL and CSA standards (Copper conductors). All other data are provided as supplementary information only. For more details, please consult our CB, UL or CSA certificates and technical datasheet available on http://www.TE.com

CE RoHS USR CNR cCSAus Gost R

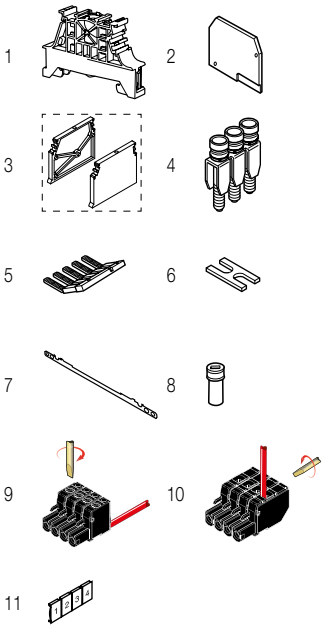

Accessories

	Description				Color	Type	Part Number		Pkg pce	Weight (1 pce) g
1	**End stops**	10 mm	0.394 in		Dark grey	BAM4	1SNK900001R0000		50	14.00
		5.2 mm	0.205 in			BAZ1	1SNK900002R0000		50	5.30
2	**End sections**	2.8 mm	0.110 in		Grey	FEM6	1SNA400824R0000		20	2.40
3	**End section-flange kit (R+L)**				Grey	ENS.FE-BCP	1SNA400819R0000		10	7.00
4	**Jumper bars**	2 poles	24 A			BJMI5-2	1SNA176278R1600		10	3.30
		3 poles				BJMI5-3	1SNA176279R1700		10	5.00
		4 poles				BJMI5-4	1SNA176280R0500		10	6.70
		10 poles				BJMI5-10	1SNA176282R2300		10	16.90
5	**Lateral jumper bars**	2 poles	30 A		Grey	PC5-2	1SNA113542R1000		10	1.80
		10 poles				PC5-10	1SNA113544R1200		10	6.00
6	**Cross spacing jumpers**	5 mm 0.200 in - 6 mm 0.236 in - 8 mm 0.315 in				EL6	1SNA173627R2100		10	0.10
7	**Shield connectors**					CBM5	1SNA178745R1400		50	
8	**Coding pegs**					COCF 32	1SNA173660R1600		10	0.10
						COC 1	1SNA299777R1600		10	
9	**Female plugs wires parallel**	5.08 mm	0.200 in	2 poles	Black	CPFT2/2	1SNA094302R2100		120	3.20
				3 poles		CPFT2/3	1SNA094303R2200		80	4.80
				4 poles		CPFT2/4	1SNA094304R2300		60	6.40
				10 poles		CPFT2/10	1SNA094310R2400		20	16.00
10	**Female plugs wires perpendicular**	5.08 mm	0.200 in	2 poles	Black	CPFT2/R-2	1SNA094352R2200		120	3.80
				3 poles		CPFT2/R-3	1SNA094353R2300		80	5.70
				4 poles		CPFT2/R-4	1SNA094354R2400		60	7.60
				10 poles		CPFT2/R-10	1SNA094360R0600		20	19.00
11	**Terminal block markers**	Blank card			White	RC510	1SNA231000R0700		1	5.20

Complete list of accessories is indicated in the terminal block datasheet.
Some accessories such as jumper bars may modify the terminal block's ratings: complete information in the accessories catalogue pages.

Technical data valid for copper conductors only.

1SNC164001S0201 - Rev. B

MA2.5/5-CPE pluggable terminal blocks

Feed-through - 5.08 mm 0.200 in spacing

2.5 mm²
12 AWG

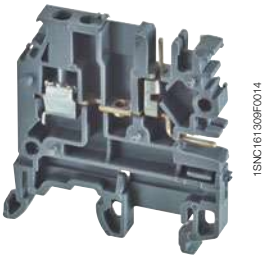

MA2.5/5-CPE

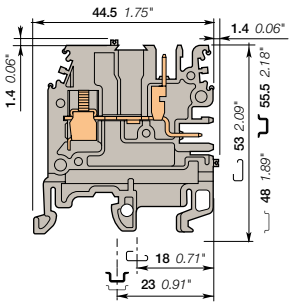

5.08 mm 0.200 in spacing

Description

- Save in flexibility, reliability and simplicity thanks to the pluggable terminal blocks,
- They are particularly well adapted to solve the connecting problems of equipment composed of sub-assemblies (complex machines such as elevators or trains, panel boards with extension boxes...),
- They can then be easily connected through patchcords with CPFT2 plugs connected to the pluggable terminal blocks outputs.

Ordering details

Description		Color	Type	Part Number		Pkg pce	Weight (1 pce) g
Feed-through	1 feed-through circuit with partition	Grey	MA2.5/5-CPE.1	1SNA400822R0000		50	7.00

Main technical data

		IEC	UL	CSA
1 conductor per clamp	Rigid: Solid/Stranded	0.2-4 mm²	24-12 AWG	
	Flexible without ferrule	0.22-2.5 mm²		
	Flexible with insulated ferrule			
	Gauge	A3		
Rated current / Rated cross section		12 A / 2.5 mm²	10 A / 12 AWG	
Rated short-time withstand current (1s)		300 A		
Rated voltage		320 V	300 V	
Impulse withstand voltage		4000 V		
Protection		IP20	NEMA 1	

The connecting capacity data for one Rigid: Solid/Stranded, or one Flexible conductor (when applicable) is a mandatory information required by IEC, UL and CSA standards (Copper conductors). All other data are provided as supplementary information only. For more details, please consult our CB, UL or CSA certificates and technical datasheet available on http://www.TE.com

CE RoHS USR CNR cCSAus Gost R

Mounting instructions

Rail		G32, TH 35-7.5, TH 35-15
Wire stripping length		8.5 mm 0.33 in
Tool		Flat screwdriver Ø 3.5 mm Ø 0.138 in
Torque		0.4 - 0.6 Nm 3.5 - 5.3 lb.in

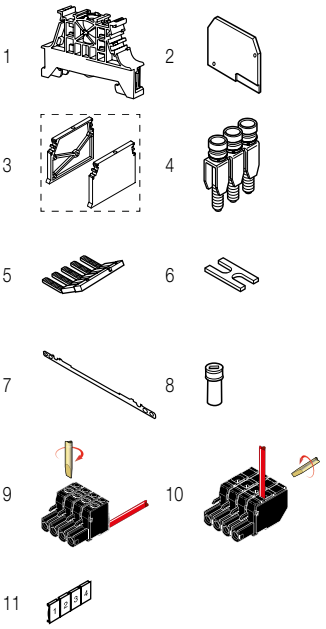

Accessories

	Description				Color	Type	Part Number		Pkg pce	Weight (1 pce) g
1	**End stops**	10 mm	0.394 in		Dark grey	BAM4	1SNK900001R0000		50	14.00
		5.2 mm	0.205 in			BAZ1	1SNK900002R0000		50	5.30
2	**End sections**	2.8 mm	0.110 in		Grey	FEM6	1SNA400824R0000		20	2.40
3	**End section-flange kit (R+L)**					ENS.FE-BCP	1SNA400819R0000		10	7.00
4	**Jumper bars**	2 poles	24 A			BJMI5-2	1SNA176278R1600		10	3.30
		3 poles				BJMI5-3	1SNA176279R1700		10	5.00
		4 poles				BJMI5-4	1SNA176280R0500		10	6.70
		10 poles				BJMI5-10	1SNA176282R2300		10	16.90
5	**Lateral jumper bars**	2 poles	30 A		Grey	PC5-2	1SNA113542R1000		10	1.80
		10 poles				PC5-10	1SNA113544R1200		10	6.00
6	**Cross spacing jumpers**	5 mm 0.200 in - 6 mm 0.236 in - 8 mm 0.315 in				EL6	1SNA173627R2100		10	0.10
7	**Shield connectors**					CBM5	1SNA178745R1400		50	
8	**Coding pegs**					COCF 32	1SNA173660R1600		10	0.10
						COC 1	1SNA299777R1600		10	
9	**Female plugs wires parallel**	5.08 mm	0.200 in	2 poles	Black	CPFT2/2	1SNA094302R2100		120	3.20
				3 poles		CPFT2/3	1SNA094303R2200		80	4.80
				4 poles		CPFT2/4	1SNA094304R2300		60	6.40
				10 poles		CPFT2/10	1SNA094310R2400		20	16.00
10	**Female plugs wires perpendicular**	5.08 mm	0.200 in	2 poles	Black	CPFT2/R-2	1SNA094352R2200		120	3.80
				3 poles		CPFT2/R-3	1SNA094353R2300		80	5.70
				4 poles		CPFT2/R-4	1SNA094354R2400		60	7.60
				10 poles		CPFT2/R-10	1SNA094360R0600		20	19.00
11	**Terminal block markers**	Blank card			White	RC510	1SNA231000R0700		1	5.20

Complete list of accessories is indicated in the terminal block datasheet.
Some accessories such as jumper bars may modify the terminal block's ratings: complete information in the accessories catalogue pages.

Technical data valid for copper conductors only.

1SNC164002S0201 - Rev. B

MA2.5/5-2CPE pluggable terminal blocks

Feed-through - 5.08 mm 0.200 in spacing

2.5 mm²
12 AWG

MA2.5/5-2CPE

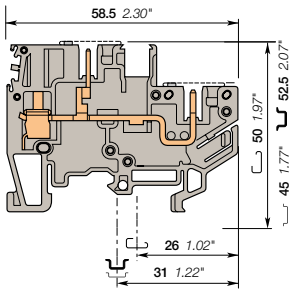

5.08 mm 0.200 in spacing

Description

- Save in flexibility, reliability and simplicity thanks to the pluggable terminal blocks,
- They are particularly well adapted to solve the connecting problems of equipment composed of sub-assemblies (complex machines such as elevators or trains, panel boards with extension boxes...),
- They can then be easily connected through patchcords with CPFT2 plugs connected to the pluggable terminal blocks outputs.

Ordering details

Description		Color	Type	Part Number		Pkg pce	Weight (1 pce) g
Feed-through	1 feed-through circuit	Grey	MA2.5/5-2CPE	1SNA400817R0000		50	7.00
		Blue	MA2.5/5-2CPE	1SNA125711R1500		50	7.00

Main technical data

		IEC	UL	CSA
1 conductor per clamp	Rigid: Solid/Stranded	0.2-4 mm²	24-12 AWG	
	Flexible without ferrule	0.22-2.5 mm²		
	Flexible with insulated ferrule			
	Gauge	A3		
Rated current / Rated cross section		12 A / 2.5 mm²	10 A / 12 AWG	
Rated short-time withstand current (1s)		300 A		
Rated voltage		320 V	300 V	
Impulse withstand voltage		4000 V		
Protection		IP20	NEMA 1	

The connecting capacity data for one Rigid: Solid/Stranded, or one Flexible conductor (when applicable) is a mandatory information required by IEC, UL and CSA standards (Copper conductors). All other data are provided as supplementary information only. For more details, please consult our CB, UL or CSA certificates and technical datasheet available on http://www.TE.com

CE RoHS USR CNR Gost R

Mounting instructions

Rail	G32, TH 35-7.5, TH 35-15
Wire stripping length	10 mm 0.394 in
Tool	Flat screwdriver Ø 3.5 mm Ø 0.138 in
Torque	0.4 - 0.6 Nm 3.5 - 5.3 lb.in

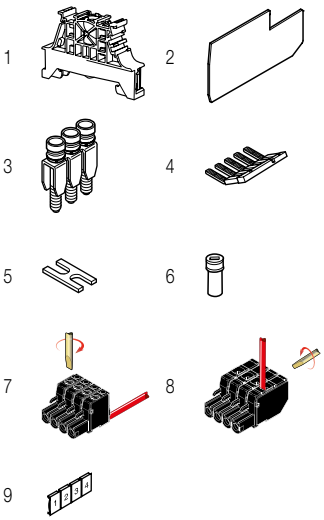

Accessories

	Description				Color	Type	Part Number		Pkg pce	Weight (1 pce) g
1	**End stops**	10 mm	0.394 in		Dark grey	BAM4	1SNK900001R0000		50	14.00
		5.2 mm	0.205 in			BAZ1	1SNK900002R0000		50	5.30
2	**End sections**	2.8 mm	0.110 in		Grey	FE2CPE	1SNA400826R0000		20	2.50
3	**Jumper bars**	2 poles	24 A			BJMI5-2	1SNA176278R1600		10	3.30
		3 poles				BJMI5-3	1SNA176279R1700		10	5.00
		4 poles				BJMI5-4	1SNA176280R0500		10	6.70
		5 poles				BJMI5-5	1SNA176281R2200		10	8.40
		10 poles				BJMI5-10	1SNA176282R2300		10	16.90
4	**Lateral jumper bars**	2 poles	30 A		Grey	PC5-2	1SNA113542R1000		10	1.80
		10 poles				PC5-10	1SNA113544R1200		10	6.00
5	**Cross spacing jumpers**	5 mm 0.200 in - 6 mm 0.236 in - 8 mm 0.315 in				EL6	1SNA173627R2100		10	0.10
6	**Coding pegs**					COCF 32	1SNA173660R1600		10	0.10
						COC 1	1SNA299777R1600		10	
7	**Female plugs wires parallel**	5.08 mm	0.200 in	2 poles	Black	CPFT2/2	1SNA094302R2100		120	3.20
				3 poles		CPFT2/3	1SNA094303R2200		80	4.80
				4 poles		CPFT2/4	1SNA094304R2300		60	6.40
				10 poles		CPFT2/10	1SNA094310R2400		20	16.00
8	**Female plugs wires perpendicular**	5.08 mm	0.200 in	2 poles	Black	CPFT2/R-2	1SNA094352R2200		120	3.80
				3 poles		CPFT2/R-3	1SNA094353R2300		80	5.70
				4 poles		CPFT2/R-4	1SNA094354R2400		60	7.60
				10 poles		CPFT2/R-10	1SNA094360R0600		20	19.00
9	**Terminal block markers**	Blank card			White	RC510	1SNA231000R0700		1	5.20

Complete list of accessories is indicated in the terminal block datasheet.
Some accessories such as jumper bars may modify the terminal block's ratings: complete information in the accessories catalogue pages.

Technical data valid for copper conductors only.

1SNC164003S0201 - Rev. A

MA2.5/5-2CPE pluggable terminal blocks

Feed-through - 5.08 mm 0.200 in spacing

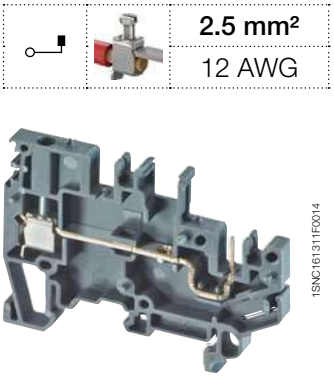

2.5 mm²
12 AWG

1SNC1613111F0014

MA2.5/5-2CPE

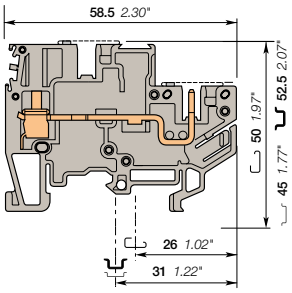

5.08 mm 0.200 in spacing

Description

- Save in flexibility, reliability and simplicity thanks to the pluggable terminal blocks,
- They are particularly well adapted to solve the connecting problems of equipment composed of sub-assemblies (complex machines such as elevators or trains, panel boards with extension boxes...),
- They can then be easily connected through patchcords with CPFT2 plugs connected to the pluggable terminal blocks outputs.

Ordering details

Description		Color	Type	Part Number		Pkg pce	Weight (1 pce) g
Feed-through	1 feed-through circuit for use in combination with disconnect blocks	Grey	MA2.5/5-2CPE1-Pb	1SNA400821R0000		50	7.00

Main technical data

		IEC	UL	CSA
1 conductor per clamp	Rigid: Solid/Stranded	0.2-4 mm²	24-12 AWG	
	Flexible without ferrule	0.22-2.5 mm²		
	Flexible with insulated ferrule			
	Gauge	A3		
Rated current / Rated cross section		12 A / 2.5 mm²	10 A / 12 AWG	
Rated short-time withstand current (1s)		300 A		
Rated voltage		320 V	300 V	
Impulse withstand voltage		4000 V		
Protection		IP20	NEMA 1	

Mounting instructions

Rail	G32, TH 35-7.5, TH 35-15
Wire stripping length	10 mm 0.394 in
Tool	Flat screwdriver Ø 3.5 mm Ø 0.138 in
Torque	0.4 - 0.6 Nm 3.5 - 5.3 lb.in

The connecting capacity data for one Rigid: Solid/Stranded, or one Flexible conductor (when applicable) is a mandatory information required by IEC, UL and CSA standards (Copper conductors). All other data are provided as supplementary information only. For more details, please consult our CB, UL or CSA certificates and technical datasheet available on http://www.TE.com

CE RoHS USR CNR Gost R

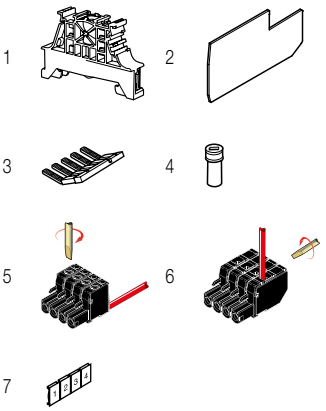

Accessories

	Description				Color	Type	Part Number		Pkg pce	Weight (1 pce) g
1	**End stops**	10 mm	0.394 in		Dark grey	BAM4	1SNK900001R0000		50	14.00
		5.2 mm	0.205 in			BAZ1	1SNK900002R0000		50	5.30
2	**End sections**	2.8 mm	0.110 in		Grey	FE2CPE	1SNA400826R0000		20	2.50
3	**Lateral jumper bars**	2 poles	30 A		Grey	PC5-2	1SNA113542R1000		10	1.80
		10 poles				PC5-10	1SNA113544R1200		10	6.00
4	**Coding pegs**					COCF 32	1SNA173660R1600		10	0.10
						COC 1	1SNA299777R1600		10	
5	**Female plugs wires parallel**	5.08 mm	0.200 in	2 poles	Black	CPFT2/2	1SNA094302R2100		120	3.20
				3 poles		CPFT2/3	1SNA094303R2200		80	4.80
				4 poles		CPFT2/4	1SNA094304R2300		60	6.40
				10 poles		CPFT2/10	1SNA094310R2400		20	16.00
6	**Female plugs wires perpendicular**	5.08 mm	0.200 in	2 poles	Black	CPFT2/R-2	1SNA094352R2200		120	3.80
				3 poles		CPFT2/R-3	1SNA094353R2300		80	5.70
				4 poles		CPFT2/R-4	1SNA094354R2400		60	7.60
				10 poles		CPFT2/R-10	1SNA094360R0600		20	19.00
7	**Terminal block markers**	Blank card			White	RC510	1SNA231000R0700		1	5.20

Complete list of accessories is indicated in the terminal block datasheet.
Some accessories such as jumper bars may modify the terminal block's ratings: complete information in the accessories catalogue pages.

Technical data valid for copper conductors only.

1SNC164004S0201 - Rev. A

MA2.5/5D-2CPE pluggable terminal blocks

Double deck with 2 feed-through circuits - 5.08 mm 0.200 in spacing

2.5 mm²
12 AWG

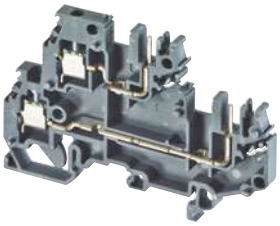

1SNC161302R0014

MA2.5/5D-2CPE

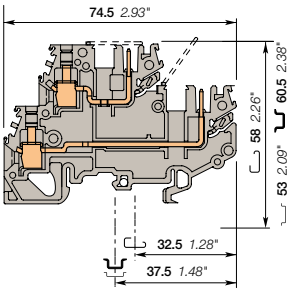

5.08 mm 0.200 in spacing

Description

- Save space with double deck terminal blocks,
- Gain in flexibility, reliability and simplicity thanks to the pluggable terminal blocks,
- Plug & play connection through pre-wired harnesses equipped with CPFT2 plugs.

Ordering details

Description		Color	Type	Part Number		Pkg pce	Weight (1 pce) g
Feed-through	2 feed-through circuits	Grey	MA2.5/5.D2-2CPE	1SNA400813R0000		50	12.00
		Blue	MA2.5/5.D2-2CPE	1SNA125961R1000		50	12.00

Main technical data

		IEC	UL	CSA
1 conductor per clamp	Rigid: Solid/Stranded	0.2-4 mm²	24-12 AWG	
	Flexible without ferrule	0.22-2.5 mm²		
	Flexible with insulated ferrule			
	Gauge	A3		
Rated current / Rated cross section		12 A / 2.5 mm²	10 A / 12 AWG	
Rated short-time withstand current (1s)		300 A		
Rated voltage		320 V	300 V	
Impulse withstand voltage		4000 V		
Protection		IP20	NEMA 1	

Mounting instructions

Rail	G32, TH 35-7.5, TH 35-15
Wire stripping length	10 mm 0.394 in
Tool	Flat screwdriver Ø 3.5 mm Ø 0.138 in
Torque	0.4 - 0.6 Nm 3.5 - 5.3 lb.in

The connecting capacity data for one Rigid: Solid/Stranded, or one Flexible conductor (when applicable) is a mandatory information required by IEC, UL and CSA standards (Copper conductors). All other data are provided as supplementary information only. For more details, please consult our CB, UL or CSA certificates and technical datasheet available on http://www.TE.com

CE | RoHS | USR CNR | Gost R

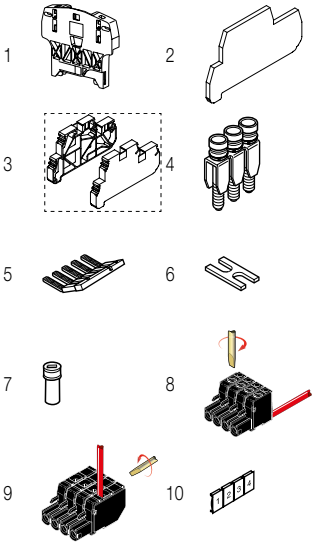

Accessories

	Description				Color	Type	Part Number		Pkg pce	Weight (1 pce) g
1	**End stops**	10 mm	0.394 in		Dark grey	BAZH1	1SNK900102R0000		20	24.00
2	**End sections**	2.54 mm	0.100 in		Grey	FEDCP	1SNA400825R0000		20	3.50
3	**End section-flange kit (R+L)**				Grey	ENS.FEDBCP	1SNA400818R0000		10	11.00
4	**Jumper bars**	2 poles	24 A			BJMI5-2	1SNA176278R1600		10	3.30
		3 poles				BJMI5-3	1SNA176279R1700		10	5.00
		4 poles				BJMI5-4	1SNA176280R0500		10	6.70
		10 poles				BJMI5-10	1SNA176282R2300		10	16.90
5	**Lateral jumper bars**	2 poles	30 A		Grey	PC5-2	1SNA113542R1000		10	1.80
		10 poles				PC5-10	1SNA113544R1200		10	6.00
6	**Cross spacing jumpers**	5 mm 0.200 in - 6 mm 0.236 in - 8 mm 0.315 in				EL6	1SNA173627R2100		10	0.10
7	**Coding pegs**					COCF 32	1SNA173660R1600		10	0.10
						COC 1	1SNA299777R1600		10	
8	**Female plugs wires parallel**	5.08 mm	0.200 in	2 poles	Black	CPFT2/2	1SNA094302R2100		120	3.20
				3 poles		CPFT2/3	1SNA094303R2200		80	4.80
				4 poles		CPFT2/4	1SNA094304R2300		60	6.40
				10 poles		CPFT2/10	1SNA094310R2400		20	16.00
9	**Female plugs wires perpendicular**	5.08 mm	0.200 in	2 poles	Black	CPFT2/R-2	1SNA094352R2200		120	3.80
				3 poles		CPFT2/R-3	1SNA094353R2300		80	5.70
				4 poles		CPFT2/R-4	1SNA094354R2400		60	7.60
				10 poles		CPFT2/R-10	1SNA094360R0600		20	19.00
10	**Terminal block markers**	Blank card			White	RC510	1SNA231000R0700		1	5.20

Complete list of accessories is indicated in the terminal block datasheet.
Some accessories such as jumper bars may modify the terminal block's ratings: complete information in the accessories catalogue pages.

Technical data valid for copper conductors only.

1SNC164005S0201 - Rev. B

MA2.5/5D-2CPE pluggable terminal blocks

Double deck with 1 feed-through circuit - 5.08 mm 0.200 in spacing

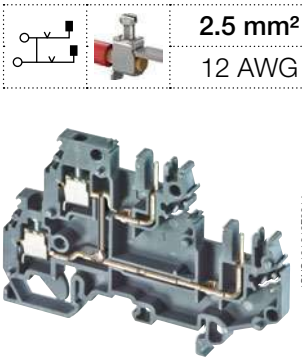

MA2.5/5D-2CPE

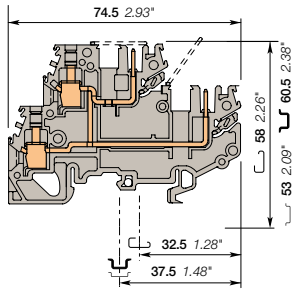

5.08 mm 0.200 in spacing

	2.5 mm²
	12 AWG

Description

- Save space with double deck terminal blocks,
- Gain in flexibility, reliability and simplicity thanks to the pluggable terminal blocks,
- Plug & play connection through pre-wired harnesses equipped with CPFT2 plugs.

Ordering details

Description		Color	Type	Part Number		Pkg pce	Weight (1 pce) g
Feed-through	1 feed-through circuit	Grey	MA2.5/5.D-2CPE	1SNA400823R0000		50	12.00

Main technical data

		IEC	UL	CSA
1 conductor per clamp	Rigid: Solid/Stranded	0.2-4 mm²	24-12 AWG	
	Flexible without ferrule	0.22-2.5 mm²		
	Flexible with insulated ferrule			
	Gauge	A3		
Rated current / Rated cross section		12 A / 2.5 mm²	10 A / 12 AWG	
Rated short-time withstand current (1s)		300 A		
Rated voltage		320 V	300 V	
Impulse withstand voltage		4000 V		
Protection		IP20	NEMA 1	

The connecting capacity data for one Rigid: Solid/Stranded, or one Flexible conductor (when applicable) is a mandatory information required by IEC, UL and CSA standards (Copper conductors). All other data are provided as supplementary information only. For more details, please consult our CB, UL or CSA certificates and technical datasheet available on http://www.TE.com

CE RoHS USR CNR Gost R

Mounting instructions

Rail	G32, TH 35-7.5, TH 35-15
Wire stripping length	10 mm 0.394 in
Tool	Flat screwdriver Ø 3.5 mm Ø 0.138 in
Torque	0.4 - 0.6 Nm 3.5 - 5.3 lb.in

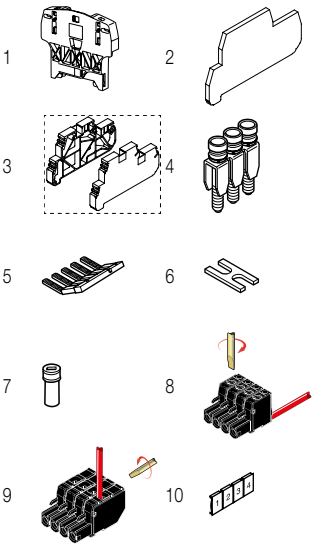

Accessories

	Description				Color	Type	Part Number		Pkg pce	Weight (1 pce) g
1	**End stops**	10 mm	0.394 in		Dark grey	BAZH1	1SNK900102R0000		20	24.00
2	**End sections**	2.54 mm	0.100 in		Grey	FEDCP	1SNA400825R0000		20	3.50
3	**End section-flange kit (R+L)**				Grey	ENS.FEDBCP	1SNA400818R0000		10	11.00
4	**Jumper bars**	2 poles	24 A			BJMI5-2	1SNA176278R1600		10	3.30
		3 poles				BJMI5-3	1SNA176279R1700		10	5.00
		4 poles				BJMI5-4	1SNA176280R0500		10	6.70
		10 poles				BJMI5-10	1SNA176282R2300		10	16.90
5	**Lateral jumper bars**	2 poles			Grey	PC5-2	1SNA113542R1000		10	1.80
		10 poles				PC5-10	1SNA113544R1200		10	6.00
6	**Cross spacing jumpers**	5 mm 0.200 in - 6 mm 0.236 in - 8 mm 0.315 in				EL6	1SNA173627R2100		10	0.10
7	**Coding pegs**					COCF 32	1SNA173660R1600		10	0.10
						COC 1	1SNA299777R1600		10	
8	**Female plugs wires parallel**	5.08 mm	0.200 in	2 poles	Black	CPFT2/2	1SNA094302R2100		120	3.20
				3 poles		CPFT2/3	1SNA094303R2200		80	4.80
				4 poles		CPFT2/4	1SNA094304R2300		60	6.40
				10 poles		CPFT2/10	1SNA094310R2400		20	16.00
9	**Female plugs wires perpendicular**	5.08 mm	0.200 in	2 poles	Black	CPFT2/R-2	1SNA094352R2200		120	3.80
				3 poles		CPFT2/R-3	1SNA094353R2300		80	5.70
				4 poles		CPFT2/R-4	1SNA094354R2400		60	7.60
				10 poles		CPFT2/R-10	1SNA094360R0600		20	19.00
10	**Terminal block markers**	Blank card			White	RC510	1SNA231000R0700		1	5.20

Complete list of accessories is indicated in the terminal block datasheet.
Some accessories such as jumper bars may modify the terminal block's ratings: complete information in the accessories catalogue pages.

Technical data valid for copper conductors only.

1SNC164006S0201 - Rev. B

MA2.5/5-SNB-CPE pluggable terminal blocks

Disconnect with blade - 5.08 mm 0.200 in spacing

2.5 mm²
12 AWG

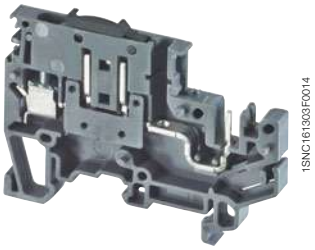

MA2.5/5-SNB-CPE

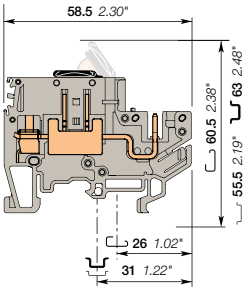

5.08 mm 0.200 in spacing

Description

- Save in flexibility, reliability and simplicity thanks to the pluggable terminal blocks,
- They are particularly well adapted to solve the connecting problems of equipment composed of sub-assemblies (complex machines such as elevators or trains, panel boards with extension boxes...),
- They can then be easily connected through patchcords with CPFT2 plugs connected to the pluggable terminal blocks outputs.

Ordering details

Description		Color	Type	Part Number		Pkg pce	Weight (1 pce) g
Disconnect	1 feed-through circuit	Grey	MA2.5/5-SNB-CPE	1SNA400815R0000		50	7.00

Main technical data

		IEC	UL	CSA
1 conductor per clamp	Rigid: Solid/Stranded	0.2-4 mm²	24-12 AWG	
	Flexible without ferrule	0.22-2.5 mm²		
	Flexible with insulated ferrule			
	Gauge	A3		
Rated current / Rated cross section		10 A / 2.5 mm²	10 A / 12 AWG	
Rated short-time withstand current (1s)		120 A		
Rated voltage		320 V	300 V	
Impulse withstand voltage		4000 V		
Protection		IP20	NEMA 1	

Mounting instructions

Rail	G32, TH 35-7.5, TH 35-15
Wire stripping length	10 mm 0.394 in
Tool	Flat screwdriver Ø 3.5 mm Ø 0.138 in
Torque	0.4 - 0.6 Nm 3.5 - 5.3 lb.in

The connecting capacity data for one Rigid: Solid/Stranded, or one Flexible conductor (when applicable) is a mandatory information required by IEC, UL and CSA standards (Copper conductors). All other data are provided as supplementary information only. For more details, please consult our CB, UL or CSA certificates and technical datasheet available on http://www.TE.com

CE | RoHS | USR CNR | Gost R

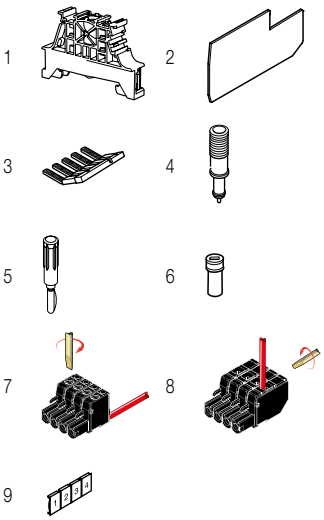

Accessories

	Description				Color	Type	Part Number		Pkg pce	Weight (1 pce) g
1	**End stops**	10 mm	0.394 in		Dark grey	BAM4	1SNK900001R0000		50	14.00
		5.2 mm	0.205 in			BAZ1	1SNK900002R0000		50	5.30
2	**End sections**	2.8 mm	0.110 in		Grey	FE2CPE	1SNA400826R0000		20	2.50
3	**Lateral jumper bars**	2 poles	30 A		Grey	PC5-2	1SNA113542R1000		10	1.80
		10 poles				PC5-10	1SNA113544R1200		10	6.00
4	**Test adapters**				Blue	DCB	1SNA105028R2100		10	20.00
5	**Test plugs**	DIA 2 mm	0.079 in		Black	FC2	1SNA007865R2600		100	
6	**Coding pegs**					COCF 32	1SNA173660R1600		10	0.10
						COC 1	1SNA299777R1600		10	
7	**Female plugs wires parallel**	5.08 mm	0.200 in	2 poles	Black	CPFT2/2	1SNA094302R2100		120	3.20
				3 poles		CPFT2/3	1SNA094303R2200		80	4.80
				4 poles		CPFT2/4	1SNA094304R2300		60	6.40
				10 poles		CPFT2/10	1SNA094310R2400		20	16.00
8	**Female plugs wires perpendicular**	5.08 mm	0.200 in	2 poles	Black	CPFT2/R-2	1SNA094352R2200		120	3.80
				3 poles		CPFT2/R-3	1SNA094353R2300		80	5.70
				4 poles		CPFT2/R-4	1SNA094354R2400		60	7.60
				10 poles		CPFT2/R-10	1SNA094360R0600		20	19.00
9	**Terminal block markers**	Blank card			White	RC510	1SNA231000R0700		1	5.20

Complete list of accessories is indicated in the terminal block datasheet.
Some accessories such as jumper bars may modify the terminal block's ratings: complete information in the accessories catalogue pages.

Technical data valid for copper conductors only.

1SNC164007S0201 - Rev. A

D1.5/7.ADO-CPE pluggable terminal blocks

Feed-through ADO - pluggable - 7.62 mm 0.300 in spacing

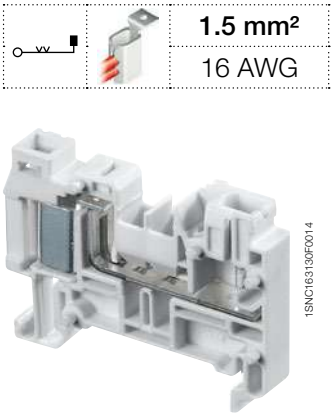

1.5 mm²	
16 AWG	

D1.5/7.ADO-CPE

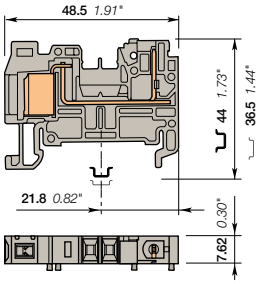

7.62 mm 0.300 in spacing

Description

- Disconnect terminal blocks allow easy opening, maintenance and current or voltage testing without disconnecting the wiring,
- With the TE Connectivity ADO System®, experience the fastest and most reliable connection on the market,
- Designed for control applications exposed to severe constrains (vibrations, shocks, corrosion etc.),
- Up to 2 wires per connection.

Ordering details

Description		Color	Type	Part Number		Pkg pce	Weight (1 pce) g
Feed-through	1 ADO, 1 pluggable	Grey	D1.5/7.ADO-CPE	1SNA290486R2700		50	

Main technical data

		IEC	UL	CSA
ADO	Rigid: Solid/Stranded	0.34-1.5 mm²	22-16 AWG	
	Flexible without ferrule	0.34-2.5 mm²		
Screw clamp	Rigid: Solid/Stranded			
	Flexible without ferrule			
	Flexible with insulated ferrule			
	Gauge			
Rated current / Rated cross section		16 A / 1.5 mm²	15 A / 16 AWG	
Rated short-time withstand current (1s)		180 A		
Rated voltage		500 V	300 V	
Impulse withstand voltage				
Protection		IP20	NEMA 1	

Mounting instructions

Rail		TH 35-7.5, TH 35-15
Wire stripping length		
Tool		
Torque		

The connecting capacity data for one Rigid: Solid/Stranded, or one Flexible conductor (when applicable) is a mandatory information required by IEC, UL and CSA standards (Copper conductors). All other data are provided as supplementary information only. For more details, please consult our CB, UL or CSA certificates and technical datasheet available on http://www.TE.com

RoHS RoHS USR CNR Gost R

Notes

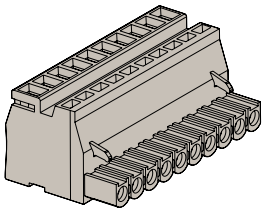

1SSA2662xxR1100

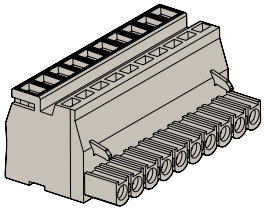

1SSA2672xxR1100

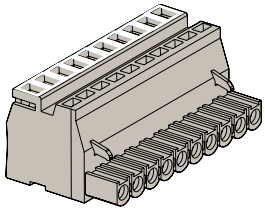

1SSA2762xxR1100

Accessories

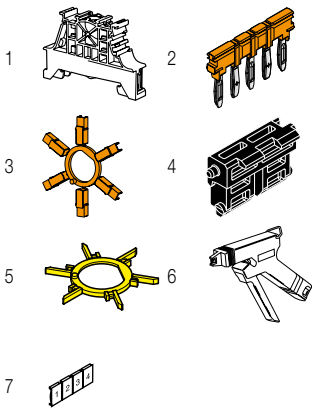

	Description			Color	Type	Part Number		Pkg pce	Weight (1 pce) g
1	**End stops**	10 mm	0.394 in	Dark grey	BAM4	1SNK900001R0000		50	14.00
		5.2 mm	0.205 in		BAZ1	1SNK900002R0000		50	5.30
2	**Jumper bars**	2 poles			BJE762.2	1SNA290451R0300		10	5.30
		5 poles			BJE762.5	1SNA290452R0400		10	15.40
		10 poles			BJE762.10	1SNA290453R0500		10	24.00
3	**Insulating tips**	For jumper bars type BJE762		Orange	EIP	1SNA290454R0600		10	100.00
4	**Locking devices**			Black	VRADO.CPE7	1SNA400063R0000		20	0.40
5	**Coding pegs**			Yellow	COCE	1SNA199321R2100		10	1.00
6	**Tools**	Semi automatic tool			OUPAD	1SNA178944R0400		1	205.00
		Hand tool			OUMAD	1SNA179466R0600		1	29.00
7	**Terminal block markers**	Blank card		White	RB-12W7	1SNA290455R0700		50	6.00

Complete list of accessories is indicated in the terminal block datasheet.
Some accessories such as jumper bars may modify the terminal block's ratings: complete information in the accessories catalogue pages.

Technical data valid for copper conductors only.

1SNC163075S0201 - Rev. A

D2.5/7.ADO-CPE pluggable terminal blocks

Feed-through ADO - pluggable - 7.62 mm 0.300 in spacing

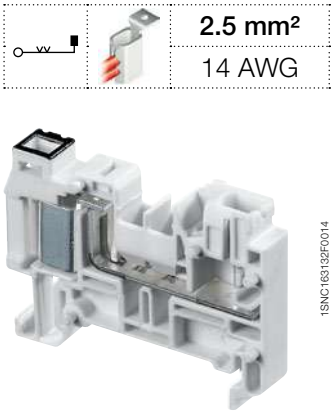

2.5 mm²
14 AWG

1SNC163132F0014

D2.5/7.ADO-CPE

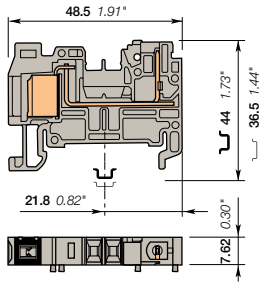

7.62 mm 0.300 in spacing

Description

- Disconnect terminal blocks allow easy opening, maintenance and current or voltage testing without disconnecting the wiring,
- With the TE Connectivity ADO System®, experience the fastest and most reliable connection on the market,
- Designed for control applications exposed to severe constrains (vibrations, shocks, corrosion etc.),
- Up to 2 wires per connection.

Ordering details

Description		Color	Type	Part Number		Pkg pce	Weight (1 pce) g
Feed-through	1 ADO, 1 pluggable with black marking for wire size 1-2.5 mm² (16-14 AWG)	Grey	D2.5/7.ADO-CPE	1SNA290483R2400		50	8.40

Main technical data

		IEC	UL	CSA
ADO	Rigid: Solid/Stranded	1-2.5 mm²	16-14 AWG	
	Flexible without ferrule	1-2.5 mm²		
Screw clamp	Rigid: Solid/Stranded			
	Flexible without ferrule			
	Flexible with insulated ferrule			
	Gauge			
Rated current / Rated cross section		24 A / 2.5 mm²	15 A / 14 AWG	
Rated short-time withstand current (1s)		300 A		
Rated voltage		500 V	300 V	
Impulse withstand voltage				
Protection		IP20	NEMA 1	

Mounting instructions

Rail	TH 35-7.5, TH 35-15
Wire stripping length	
Tool	
Torque	

The connecting capacity data for one Rigid: Solid/Stranded, or one Flexible conductor (when applicable) is a mandatory information required by IEC, UL and CSA standards (Copper conductors). All other data are provided as supplementary information only. For more details, please consult our CB, UL or CSA certificates and technical datasheet available on http://www.TE.com

RoHS RoHS | USR CNR | Gost R

Notes

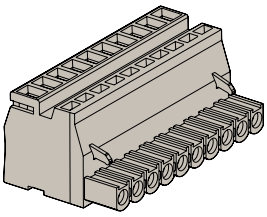

1SSA2662xxR1100

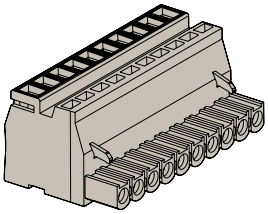

1SSA2672xxR1100

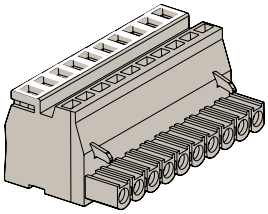

1SSA2762xxR1100

Accessories

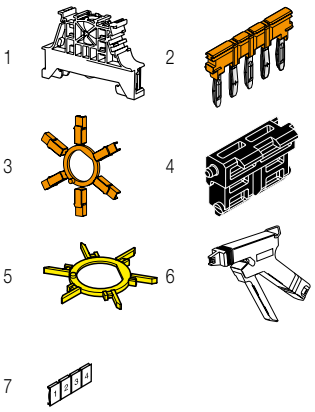

	Description			Color	Type	Part Number		Pkg pce	Weight (1 pce) g
1	**End stops**	10 mm	0.394 in	Dark grey	BAM4	1SNK900001R0000		50	14.00
		5.2 mm	0.205 in		BAZ1	1SNK900002R0000		50	5.30
2	**Jumper bars**	2 poles			BJE762.2	1SNA290451R0300		10	5.30
		5 poles			BJE762.5	1SNA290452R0400		10	15.40
		10 poles			BJE762.10	1SNA290453R0500		10	24.00
3	**Insulating tips**	For jumper bars type BJE762		Orange	EIP	1SNA290454R0600		10	100.00
4	**Locking devices**			Black	VRADO.CPE7	1SNA400063R0000		20	0.40
5	**Coding pegs**			Yellow	COCE	1SNA199321R2100		10	1.00
6	**Tools**	Semi automatic tool			OUPAD	1SNA178944R0400		1	205.00
		Hand tool			OUMAD	1SNA179466R0600		1	29.00
7	**Terminal block markers**	Blank card		White	RB-12W7	1SNA290455R0700		50	6.00

Complete list of accessories is indicated in the terminal block datasheet.
Some accessories such as jumper bars may modify the terminal block's ratings: complete information in the accessories catalogue pages.

Technical data valid for copper conductors only.

1SNC163077S0201 - Rev. A

D1.5/7.2ADO-CPE pluggable terminal blocks

Feed-through ADO - pluggable - 7.62 mm 0.300 in spacing

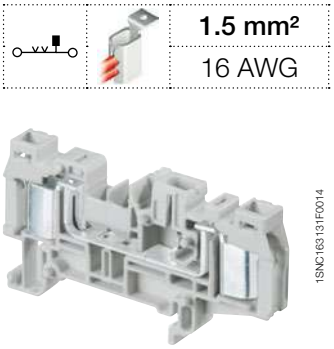

1.5 mm²
16 AWG

1SNC163131F0014

D1.5/7.2ADO-CPE

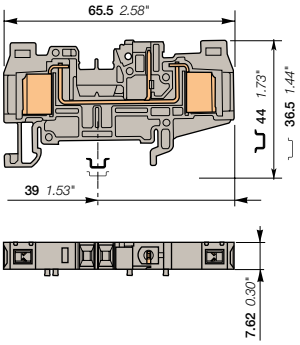

7.62 mm 0.300 in spacing

Description

- Disconnect terminal blocks allow easy opening, maintenance and current or voltage testing without disconnecting the wiring,
- With the TE Connectivity ADO System®, experience the fastest and most reliable connection on the market,
- Designed for control applications exposed to severe constrains (vibrations, shocks, corrosion etc.),
- Up to 2 wires per connection.

Ordering details

Description		Color	Type	Part Number		Pkg pce	Weight (1 pce) g
Feed-through	2 ADO, 1 pluggable	Grey	D1.5/7.2ADO-CPE	1SNA290487R2000		50	

Main technical data

		IEC	UL	CSA
ADO	Rigid: Solid/Stranded	0.34-1.5 mm²	22-16 AWG	
	Flexible without ferrule	0.34-2.5 mm²		
Screw clamp	Rigid: Solid/Stranded			
	Flexible without ferrule			
	Flexible with insulated ferrule			
	Gauge			
Rated current / Rated cross section		16 A / 1.5 mm²	15 A / 16 AWG	
Rated short-time withstand current (1s)		180 A		
Rated voltage		500 V	300 V	
Impulse withstand voltage				
Protection		IP20	NEMA 1	

Mounting instructions

Rail		TH 35-7.5, TH 35-15
Wire stripping length		
Tool		
Torque		

The connecting capacity data for one Rigid: Solid/Stranded, or one Flexible conductor (when applicable) is a mandatory information required by IEC, UL and CSA standards (Copper conductors). All other data are provided as supplementary information only. For more details, please consult our CB, UL or CSA certificates and technical datasheet available on http://www.TE.com

RoHS RoHS · USR CNR · Gost R

Notes

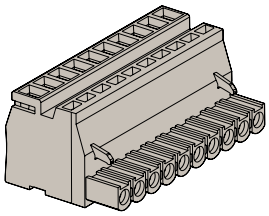

1SSA2662xxR1100

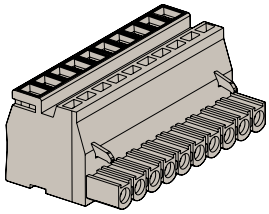

1SSA2672xxR1100

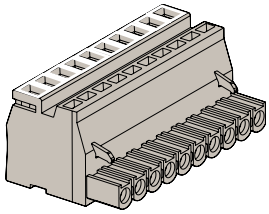

1SSA2762xxR1100

Accessories

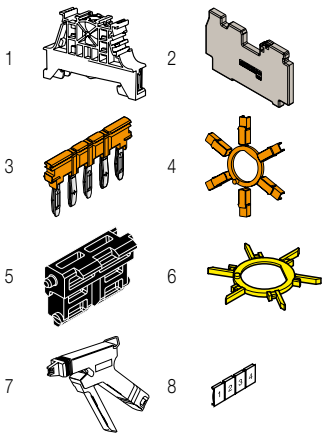

	Description			Color	Type	Part Number		Pkg pce	Weight (1 pce) g
1	**End stops**	10 mm	0.394 in	Dark grey	BAM4	1SNK900001R0000		50	14.00
		5.2 mm	0.205 in		BAZ1	1SNK900002R0000		50	5.30
2	**End sections**	2.9 mm	0.114 in	Grey	FECPE.2ADO	1SNA291833R1700		20	2.50
3	**Jumper bars**	2 poles			BJE762.2	1SNA290451R0300		10	5.30
		5 poles			BJE762.5	1SNA290452R0400		10	15.40
		10 poles			BJE762.10	1SNA290453R0500		10	24.00
4	**Insulating tips**	For jumper bars type BJE762		Orange	EIP	1SNA290454R0600		10	100.00
5	**Locking devices**			Black	VRADO.CPE7	1SNA400063R0000		20	0.40
6	**Coding pegs**			Yellow	COCE	1SNA199321R2100		10	1.00
7	**Tools**	Semi automatic tool			OUPAD	1SNA178944R0400		1	205.00
		Hand tool			OUMAD	1SNA179466R0600		1	29.00
8	**Terminal block markers**	Blank card		White	RB-12W7	1SNA290455R0700		50	6.00

Complete list of accessories is indicated in the terminal block datasheet.
Some accessories such as jumper bars may modify the terminal block's ratings: complete information in the accessories catalogue pages.

Technical data valid for copper conductors only.

1SNC163076S0201 - Rev. A

D2.5/7.2ADO-CPE pluggable terminal blocks

Feed-through ADO - pluggable - 7.62 mm 0.300 in spacing

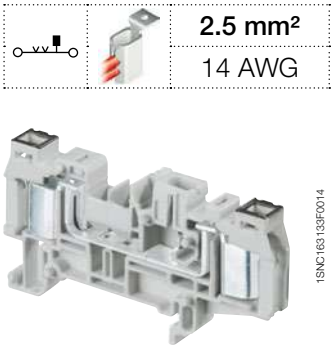

2.5 mm²
14 AWG

1SNC163133F0014

D2.5/7.2ADO-CPE

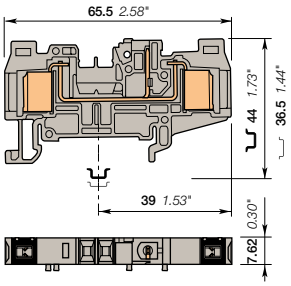

7.62 mm 0.300 in spacing

Description

- Disconnect terminal blocks allow easy opening, maintenance and current or voltage testing without disconnecting the wiring,
- With the TE Connectivity ADO System®, experience the fastest and most reliable connection on the market,
- Designed for control applications exposed to severe constrains (vibrations, shocks, corrosion etc.),
- Up to 2 wires per connection.

Ordering details

Description		Color	Type	Part Number		Pkg pce	Weight (1 pce) g
Feed-through	2 ADO, 1 pluggable with black marking for wire size 1-2.5 mm² (16-14 AWG)	Grey	D2.5/7.2ADO-CPE	1SNA290484R2500		50	11.00

Main technical data

		IEC	UL	CSA
ADO	Rigid: Solid/Stranded	1-2.5 mm²	16-14 AWG	
	Flexible without ferrule	1-2.5 mm²		
Screw clamp	Rigid: Solid/Stranded			
	Flexible without ferrule			
	Flexible with insulated ferrule			
	Gauge			
Rated current / Rated cross section		24 A / 2.5 mm²	15 A / 14 AWG	
Rated short-time withstand current (1s)		300 A		
Rated voltage		500 V	300 V	
Impulse withstand voltage				
Protection		IP20	NEMA 1	

Mounting instructions

Rail	TH 35-7.5, TH 35-15
Wire stripping length	
Tool	
Torque	

The connecting capacity data for one Rigid: Solid/Stranded, or one Flexible conductor (when applicable) is a mandatory information required by IEC, UL and CSA standards (Copper conductors). All other data are provided as supplementary information only. For more details, please consult our CB, UL or CSA certificates and technical datasheet available on http://www.TE.com

RoHS / RoHS — USR CNR — Gost R

Notes

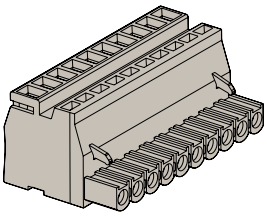

1SSA2662xxR1100

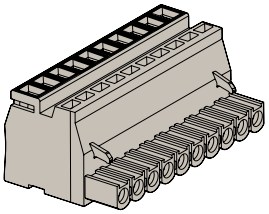

1SSA2672xxR1100

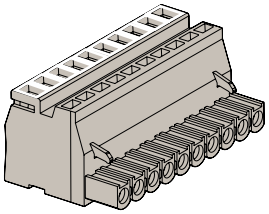

1SSA2762xxR1100

Accessories

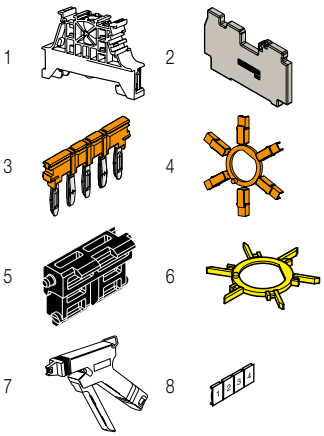

	Description			Color	Type	Part Number		Pkg pce	Weight (1 pce) g
1	**End stops**	10 mm	0.394 in	Dark grey	BAM4	1SNK900001R0000		50	14.00
		5.2 mm	0.205 in		BAZ1	1SNK900002R0000		50	5.30
2	**End sections**	2.9 mm	0.114 in	Grey	FECPE.2ADO	1SNA291833R1700		20	2.50
3	**Jumper bars**	2 poles			BJE762.2	1SNA290451R0300		10	5.30
		5 poles			BJE762.5	1SNA290452R0400		10	15.40
		10 poles			BJE762.10	1SNA290453R0500		10	24.00
4	**Insulating tips**	For jumper bars type BJE762		Orange	EIP	1SNA290454R0600		10	100.00
5	**Locking devices**			Black	VRADO.CPE7	1SNA400063R0000		20	0.40
6	**Coding pegs**			Yellow	COCE	1SNA199321R2100		10	1.00
7	**Tools**	Semi automatic tool			OUPAD	1SNA178944R0400		1	205.00
		Hand tool			OUMAD	1SNA179466R0600		1	29.00
8	**Terminal block markers**	Blank card		White	RB-12W7	1SNA290455R0700		50	6.00

Complete list of accessories is indicated in the terminal block datasheet.
Some accessories such as jumper bars may modify the terminal block's ratings: complete information in the accessories catalogue pages.

Technical data valid for copper conductors only.

1SNC163078S0201 - Rev. A

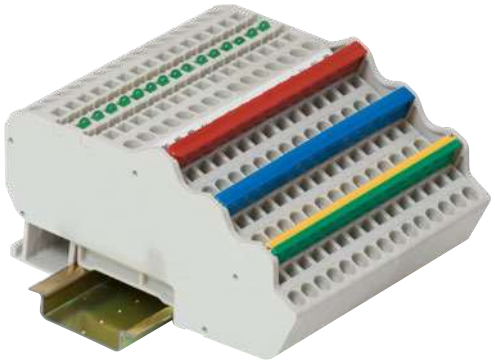

1SNC160101S0201

Dedicated applications terminal blocks
Sensors / Actuators

Technologies presentation			190
Overview			191
Screw clamp technology			
2 wire sensor			
2.5 mm² / 12 AWG	**D2.5/6.DP**		192
3 wire sensor			
2.5 mm² / 12 AWG	**D2.5/6.DA**		193
	D2.5/6.D		194
	D2.5/6.DL	With red led	195
	D2.5/6.DAL	With green led	196
Thermocouple			
	MTC6		197
Spring clamp technology			
3 wire sensor			
1.5 mm² / 16 AWG	**D2.5/5.C3.L**		198
	D2.5/5.C3.L.L	With green led	199
4 wire sensor			
1.5 mm² / 16 AWG	**D2.5/5.C4.L**		200
	D2.5/5.C4.L.L	With green led	201
ADO-ADO technology			
3 wire sensor			
1 mm² / 20 AWG	**D1/5.C3.ADO**		202
	D1/5.C3.ADO.L	With green led	203
4 wire sensor			
1 mm² / 20 AWG	**D1/5.C4.ADO**		204
	D1/5.C4.ADO.L	With green led	205

1SNC160101S0201

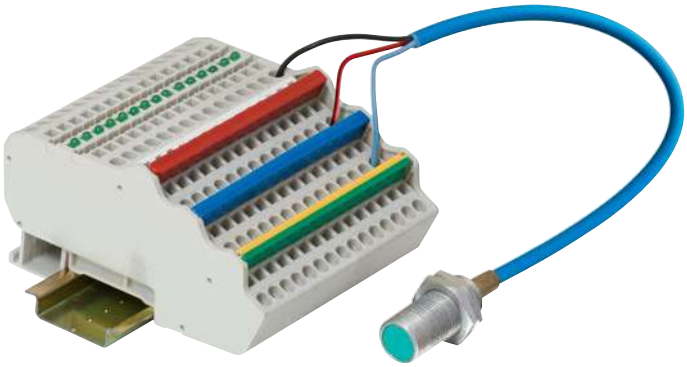

The smart choice for process automation applications

Process automation applications typically require the use of a large number of digital or analog signals and sensors.
The space constraint is often an issue in regards to this large volume of signals to handle.
TE Connectivity sensor and actuator terminal blocks reduce the installation costs, speed the wiring and ease commissioning thanks to:

- Compact multi deck terminals blocks for 3 & 4 wire sensors
- Potentials distribution via jumper (positive, negative, ground)
- Signal indication via LED for circuit status indication.

Select from our large choice of solutions and technologies

Classic and compact screw clamp terminal blocks

The product family features very compact dimensions.
It is the preferred choice for small junction boxes when panel height is a constraints. Our terminals are compatible with:

- 2 wire and 3 wire sensors
- PNP & NPN sensors.

Convenient and ergonomic spring clamp terminal blocks

The product family features popular spring technology particularly appreciated in process industry.
Our product family offers:

- Compatibility with 2, 3 and 4 wire sensors
- Compatibility with NPN and PNP sensors thanks to bidirectional LED indicators
- Color coded 34 poles plug-in jumpers adapted to popular PLC I/O cards configurations (8, 16, 32 channels).

ADO System® terminal blocks: experience the fastest and most reliable connection on the market

Our exclusive ADO System® combines speed on connection with top reliability of connection. Our product family offers:

- Compatibility with 2, 3 and 4 wire sensors
- Compatibility with NPN and PNP sensors thanks to bidirectional LED indicators
- Color coded 66 poles plug-in jumpers adapted to all PLC I/O cards configurations (8,16, 32 & 64 channels).

Universal thermocouple terminal block

This terminal block allows connection of all types of temperature thermocouple sensors. Its exclusive design allows thermocouple wire extention with no loss of signal integrity.
Learn more in the related page of our catalog.

Screw clamp terminal block

Spring terminal block

ADO System® terminal block

Thermocouple terminal block

1SNC161167S0201

Screw clamp technology

		2 wire sensor	3 wire sensor				Thermocouple
Section							
IEC	UL/CSA						
2.5 mm²	12 AWG	D2.5/6.DP 6 mm 0.236 in	D2.5/6.DA 6 mm 0.236 in	D2.5/6.D 6 mm 0.236 in	D2.5/6.DL 6 mm 0.236 in	D2.5/6.DAL 6 mm 0.236 in	MTC6 6 mm 0.236 in

Spring clamp technology

		3 wire sensor		4 wire sensor	
Section					
IEC	UL/CSA				
1.5 mm²	16 AWG	D2.5/5.C3.L 5 mm 0.197 in	D2.5/5.C3.L.L 5 mm 0.197 in	D2.5/5.C4.L 5 mm 0.197 in	D2.5/5.C4.L.L 5 mm 0.197 in

ADO - ADO technology

		3 wire sensor		4 wire sensor	
Section					
IEC	UL/CSA				
1 mm²	20 AWG	D1/5.C3.ADO 5 mm 0.197 in	D1/5.C3.ADO.L 5 mm 0.197 in	D1/5.C4.ADO 5 mm 0.197 in	D1/5.C4.ADO.L 5 mm 0.197 in

1SNC160063S0201

D2.5/6.DP screw clamp terminal blocks
Double deck + ground - 6 mm 0.236 in spacing

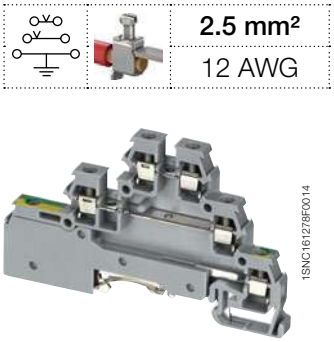

D2.5/6.DP

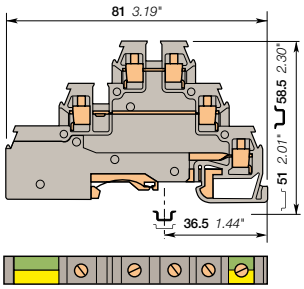

6 mm 0.236 in spacing

	2.5 mm²
	12 AWG

Description

- Save space with triple deck terminal blocks: 2 independent circuits in just 6 mm 0.236 in spacing,
- Adapted for 2 wires sensor/actuator with ground.

Ordering details

Description		Color	Type	Part Number		Pkg qty	Weight (1 pce) g
Feed-through + ground	For 2 wires sensor with ground - 2 feed-through circuits - 1 ground circuit	Grey, Green-Yellow	D2.5/6.DPA1	1SNA115643R2700		25	16.00

Main technical data

Connecting capacity		IEC	UL	CSA
1 conductor per clamp	Rigid: Solid/Stranded	0.2-2.5 mm²	20-12 AWG	22-14 AWG
	Flexible without ferrule	0.22-2.5 mm²		
	Flexible with insulated ferrule			
	Gauge	A2		
Rated current / Rated cross section		22 A / 2.5 mm²	26 A / 12 AWG	20 A / 14 AWG
Rated short-time withstand current (1s)		300 A		
Rated voltage		380 V	300 V	300 V
Impulse withstand voltage				
Protection		IP20	NEMA 1	

Mounting instructions

Rail	G32, TH 35-7.5, TH 35-15
Wire stripping length	6 mm 0.24 in
Tool	Flat screwdriver Ø 3.5 mm Ø 0.138 in
Torque	0.4 - 0.6 N.m 3.5 - 5.3 lb.in

The connecting capacity data for one Rigid: Solid/Stranded, or one Flexible conductor (when applicable) is a mandatory information required by IEC, UL and CSA standards (Copper conductors). All other data are provided as supplementary information only. For more details, please consult our CB, UL or CSA certificates and technical datasheet available on http://www.TE.com

CE RoHS USR CSA Gost R

Accessories

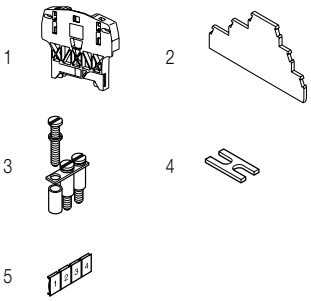

	Description			Color	Type	Part Number		Pkg qty	Weight (1 pce) g
1	**End stops**	10 mm	0.394 in	Dark grey	BAZH1	1SNK900102R0000		20	24.00
2	**End sections**	3 mm	0.118 in	Grey	FED3E	1SNA116771R2000		20	3.80
3	**Jumper bars**	2 poles	22 A		BJD6	1SNA178024R2500		10	1.00
		3 poles				1SNA178025R2600		10	2.00
		4 poles				1SNA178026R2700		10	2.00
		5 poles				1SNA178027R2000		10	3.00
		10 poles				1SNA178032R2500		10	6.00
		20 poles				1SNA178033R2600		5	12.00
4	**Cross spacing jumpers**	5 mm 0.200 in - 6 mm 0.236 in - 8 mm 0.315 in			EL61	1SNA177812R1700		10	0.10
5	**Terminal block markers**	Blank card		White	RC65	1SNA232000R0000		1	3.60

Complete list of accessories is indicated in the terminal block datasheet.
Some accessories such as jumper bars may modify the terminal block's ratings: complete information in the accessories catalogue pages.

Technical data valid for copper conductors only.

D2.5/6.DA screw clamp terminal blocks
Triple deck - 6 mm 0.236 in spacing

2.5 mm²
12 AWG

D2.5/6.DA

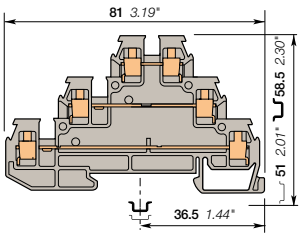

6 mm 0.236 in spacing

Description

- Save space with triple deck terminal blocks: 3 independent circuits connected in just 6 mm 0.236 in spacing,
- Adapted for 3 wires sensor/actuator.

Ordering details

Description		Color	Type	Part Number		Pkg qty	Weight (1 pce) g
Feed-through	For 3 wires sensor - 3 feed-through circuits	Grey	D2.5/6.DA	1SNA115541R1100		25	13.00

Main technical data

Connecting capacity		IEC	UL	CSA
1 conductor per clamp	Rigid: Solid/Stranded	0.2-2.5 mm²	20-12 AWG	22-14 AWG
	Flexible without ferrule	0.22-2.5 mm²		
	Flexible with insulated ferrule			
	Gauge	A2		
Rated current / Rated cross section		22 A / 2.5 mm²	26 A / 12 AWG	20 A / 14 AWG
Rated short-time withstand current (1s)		300 A		
Rated voltage		380 V	300 V	300 V
Impulse withstand voltage				
Protection		IP20	NEMA 1	

Mounting instructions

Rail	G32, TH 35-7.5, TH 35-15
Wire stripping length	6 mm 0.24 in
Tool	Flat screwdriver Ø 3.5 mm Ø 0.138 in
Torque	0.4 - 0.6 N.m 3.5 - 5.3 lb.in

The connecting capacity data for one Rigid: Solid/Stranded, or one Flexible conductor (when applicable) is a mandatory information required by IEC, UL and CSA standards (Copper conductors). All other data are provided as supplementary information only. for more details, please consult our CB, UL or CSA certificates and technical datasheet available on http://www.TE.com

CE | RoHS | USR | CSA | Gost R

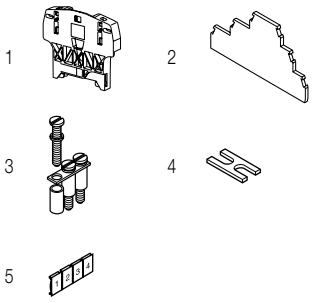

Accessories

	Description			Color	Type	Part Number		Pkg qty	Weight (1 pce) g
1	**End stops**	10 mm	0.394 in	Dark grey	BAZH1	1SNK900102R0000		20	24.00
2	**End sections**	3 mm	0.118 in	Grey	FED3E	1SNA116771R2000		20	3.80
3	**Jumper bars**	2 poles	22 A		BJD6	1SNA178024R2500		10	1.00
		3 poles				1SNA178025R2600		10	2.00
		4 poles				1SNA178026R2700		10	2.00
		5 poles				1SNA178027R2000		10	3.00
		10 poles				1SNA178032R2500		10	6.00
		20 poles				1SNA178033R2600		5	12.00
4	**Cross spacing jumpers**	5 mm 0.200 in - 6 mm 0.236 in - 8 mm 0.315 in			EL61	1SNA177812R1700		10	0.10
5	**Terminal block markers**	Blank card		White	RC65	1SNA232000R0000		1	3.60

Complete list of accessories is indicated in the terminal block datasheet.
Some accessories such as jumper bars may modify the terminal block's ratings: complete information in the accessories catalogue pages.

Technical data valid for copper conductors only.

1SNC161084S0201 - Rev. B

D2.5/6.D screw clamp terminal blocks

Sensors / Actuators - 6 mm 0.236 in spacing

2.5 mm²
12 AWG

D2.5/6.D

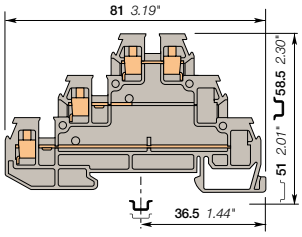

6 mm 0.236 in spacing

Description

Save space with triple deck terminal blocks: adapted for 3 wires sensor/actuator in just 6 mm 0.236 in spacing.

Ordering details

Description		Color	Type	Part Number		Pkg pce	Weight (1 pce) g
Sensor	For 3 wire sensor with a jumper channel on each deck	Grey	D2.5/6.D	1SNA115542R1200		25	10.00

Main technical data

		IEC	UL	CSA
1 conductor per clamp	Rigid: Solid/Stranded	0.2-2.5 mm²	20-12 AWG	22-14 AWG
	Flexible without ferrule	0.22-2.5 mm²		
	Flexible with insulated ferrule			
	Gauge	A2		
Rated current / Rated cross section		22 A / 2.5 mm²	26 A / 12 AWG	20 A / 14 AWG
Rated short-time withstand current (1s)		300 A		
Rated voltage		380 V	300 V	300 V
Impulse withstand voltage				
Protection		IP20	NEMA 1	

Mounting instructions

Rail	G32, TH 35-7.5, TH 35-15
Wire stripping length	6 mm 0.24 in
Tool	Flat screwdriver Ø 3.5 mm Ø 0.138 in
Torque	0.4 - 0.6 Nm 3.5 - 5.3 lb.in

The connecting capacity data for one Rigid: Solid/Stranded, or one Flexible conductor (when applicable) is a mandatory information required by IEC, UL and CSA standards (Copper conductors). All other data are provided as supplementary information only. For more details, please consult our CB, UL or CSA certificates and technical datasheet available on http://www.TE.com

CE RoHS USR CSA Gost R

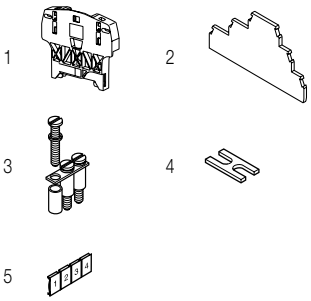

Accessories

	Description			Color	Type	Part Number		Pkg pce	Weight (1 pce) g
1	**End stops**	10 mm	0.394 in	Dark grey	BAZH1	1SNK900102R0000		20	24.00
2	**End sections**	3 mm	0.118 in	Grey	FED3E	1SNA116771R2000		20	3.80
3	**Jumper bars**	2 poles	22 A		BJD6	1SNA178024R2500		10	1.00
		3 poles				1SNA178025R2600		10	2.00
		4 poles				1SNA178026R2700		10	2.00
		5 poles				1SNA178027R2000		10	3.00
		10 poles				1SNA178032R2500		10	6.00
		20 poles				1SNA178033R2600		5	12.00
4	**Cross spacing jumpers**	5 mm 0.200 in - 6 mm 0.236 in - 8 mm 0.315 in			EL61	1SNA177812R1700		10	0.10
5	**Terminal block markers**	Blank card		White	RC65	1SNA232000R0000		1	3.60

Complete list of accessories is indicated in the terminal block datasheet.
Some accessories such as jumper bars may modify the terminal block's ratings: complete information in the accessories catalogue pages.

Technical data valid for copper conductors only.

1SNC161148S0201 - Rev. A

D2.5/6.D screw clamp terminal blocks

Sensors / Actuators - 6 mm 0.236 in spacing

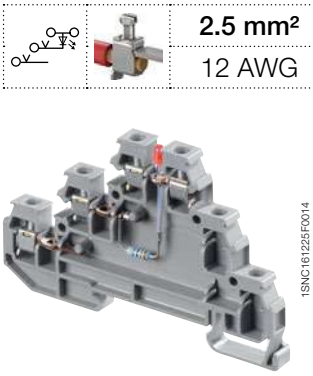

D2.5/6.D

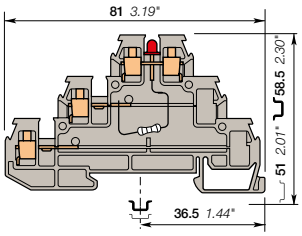

6 mm 0.236 in spacing

2.5 mm²
12 AWG

Description

- Save space with triple deck terminal blocks: adapted for 3 wires sensor/actuator in just 6 mm 0.236 in spacing,
- Quickly identify the signal circuit status thanks to the indicator.

Ordering details

Description		Color	Type	Part Number		Pkg pce	Weight (1 pce) g
Sensor	For 3 wire sensor PNP with red 24 V DC LED and a jumper bar channel on middle and lower deck	Grey	D2.5/6.DL	1SNA115537R0500		25	10.00

Main technical data

		IEC	UL	CSA
1 conductor per clamp	Rigid: Solid/Stranded	0.2-2.5 mm²	20-12 AWG	22-14 AWG
	Flexible without ferrule	0.22-2.5 mm²		
	Flexible with insulated ferrule			
	Gauge	A2		
Rated current / Rated cross section		22 A / 2.5 mm²	26 A / 12 AWG	20 A / 14 AWG
Rated short-time withstand current (1s)		300 A		
Rated voltage		380 V	300 V	300 V
Impulse withstand voltage				
Protection		IP20	NEMA 1	

Mounting instructions

Rail		G32, TH 35-7.5, TH 35-15
Wire stripping length		6 mm 0.24 in
Tool		Flat screwdriver Ø 3.5 mm Ø 0.138 in
Torque		0.4 - 0.6 Nm 3.5 - 5.3 lb.in

The connecting capacity data for one Rigid: Solid/Stranded, or one Flexible conductor (when applicable) is a mandatory information required by IEC, UL and CSA standards (Copper conductors). All other data are provided as supplementary information only. For more details, please consult our CB, UL or CSA certificates and technical datasheet available on http://www.TE.com

CE RoHS USR CSA Gost R

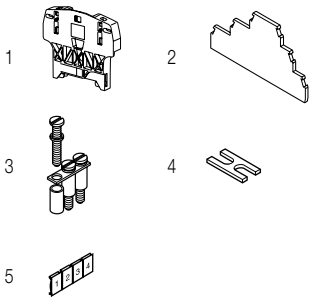

Accessories

	Description			Color	Type	Part Number		Pkg pce	Weight (1 pce) g
1	**End stops**	10 mm	0.394 in	Dark grey	BAZH1	1SNK900102R0000		20	24.00
2	**End sections**	3 mm	0.118 in	Grey	FED3E	1SNA116771R2000		20	3.80
3	**Jumper bars**	2 poles	22 A		BJD6	1SNA178024R2500		10	1.00
		3 poles				1SNA178025R2600		10	2.00
		4 poles				1SNA178026R2700		10	2.00
		5 poles				1SNA178027R2000		10	3.00
		10 poles				1SNA178032R2500		10	6.00
		20 poles				1SNA178033R2600		5	12.00
4	**Cross spacing jumpers**	5 mm 0.200 in - 6 mm 0.236 in - 8 mm 0.315 in			EL61	1SNA177812R1700		10	0.10
5	**Terminal block markers**	Blank card		White	RC65	1SNA232000R0000		1	3.60

Complete list of accessories is indicated in the terminal block datasheet.
Some accessories such as jumper bars may modify the terminal block's ratings: complete information in the accessories catalogue pages.

Technical data valid for copper conductors only.

1SNC161146S0201 - Rev. A

D2.5/6.DAL screw clamp terminal blocks

Sensors / Actuators - 6 mm 0.236 in spacing

2.5 mm²
12 AWG

D2.5/6.DAL

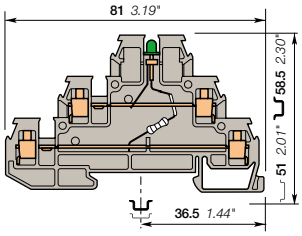

6 mm 0.236 in spacing

Description

- Save space with triple deck terminal blocks: 2 independent circuits connected in just 6 mm 0.236 in spacing,
- Adapted for 3 wires sensor/actuator,
- Quickly identify the signal circuit status thanks to the indicator.

Ordering details

Description		Color	Type	Part Number		Pkg pce	Weight (1 pce) g
Sensor	Power block with green LED 24 V DC for 3 wires sensor and a jumper bar	Grey	D2.5/6.DAL2	1SNA115547R1700		25	12.00

Main technical data

		IEC	UL	CSA
1 conductor per clamp	Rigid: Solid/Stranded	0.2-2.5 mm²	20-12 AWG	22-14 AWG
	Flexible without ferrule	0.22-2.5 mm²		
	Flexible with insulated ferrule			
	Gauge	A2		
Rated current / Rated cross section		22 A / 2.5 mm²	26 A / 12 AWG	20 A / 14 AWG
Rated short-time withstand current (1s)		300 A		
Rated voltage		380 V	300 V	300 V
Impulse withstand voltage				
Protection		IP20	NEMA 1	

The connecting capacity data for one Rigid: Solid/Stranded, or one Flexible conductor (when applicable) is a mandatory information required by IEC, UL and CSA standards (Copper conductors). All other data are provided as supplementary information only. For more details, please consult our CB, UL or CSA certificates and technical datasheet available on http://www.TE.com

CE RoHS USR CSA Gost R

Mounting instructions

Rail	G32, TH 35-7.5, TH 35-15
Wire stripping length	6 mm 0.24 in
Tool	Flat screwdriver Ø 3.5 mm Ø 0.138 in
Torque	0.4 - 0.6 Nm 3.5 - 5.3 lb.in

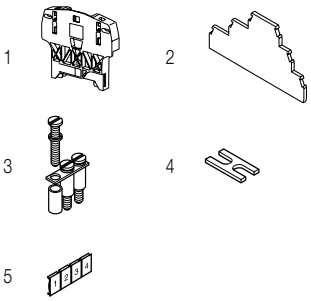

Accessories

	Description			Color	Type	Part Number		Pkg pce	Weight (1 pce) g
1	**End stops**	10 mm	0.394 in	Dark grey	BAZH1	1SNK900102R0000		20	24.00
2	**End sections**	3 mm	0.118 in	Grey	FED3E	1SNA116771R2000		20	3.80
3	**Jumper bars**	2 poles	22 A		BJD6	1SNA178024R2500		10	1.00
		3 poles				1SNA178025R2600		10	2.00
		4 poles				1SNA178026R2700		10	2.00
		5 poles				1SNA178027R2000		10	3.00
		10 poles				1SNA178032R2500		10	6.00
		20 poles				1SNA178033R2600		5	12.00
4	**Cross spacing jumpers**	5 mm 0.200 in - 6 mm 0.236 in - 8 mm 0.315 in			EL61	1SNA177812R1700		10	0.10
5	**Terminal block markers**	Blank card		White	RC65	1SNA232000R0000		1	3.60

Complete list of accessories is indicated in the terminal block datasheet.
Some accessories such as jumper bars may modify the terminal block's ratings: complete information in the accessories catalogue pages.

Technical data valid for copper conductors only.

1SNC161149S0201 - Rev. A

MTC6 thermocouple terminal blocks
Screw clamp - 6 mm 0.236 in spacing

MTC6

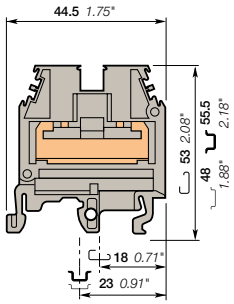

6 mm *0.236* in spacing

Description

- Universal terminal block adapted to all type of thermocouples,
- Allow thermocouple wire extention with no loss of signal integrity,
- Compatible with solid type thermocouple wires,
- Reduced inventory: only one part number needed for all configurations.

Ordering details

Description	Color	Type	Part Number	Pkg pce	Weight (1 pce) g
Feed-through	Grey	MTC6	1SNA115206R2200	50	20
		MTC6.Ex	1SNA146227R2500	50	20

Main technical data

	NFC	DIN
Wire size	2 rigid thermocouple conductors 0.9 to 1.5	
Rated voltage	500 V	
Rated voltage Ex e (MTC6.Ex)	550 V IEC/EN 60079-7 - IM2/M1 II 2 GD/1 GD Ex e I/II	

Mounting instructions

Rail	G32, TH 35-7.5, TH 35-15
Wire stripping length	31 mm 1.22 in
Torque	0.4 - 0.6 N.m 3.5 - 5.3 lb.in

The connecting capacity data for one Rigid: Solid/Stranded, or one Flexible conductor (when applicable) is a mandatory information required by IEC, UL and CSA standards (Copper conductors). All other data are provided as supplementary information only. For more details, please consult our CB, UL or CSA certificates and technical datasheet available on http://www.TE.com

RoHS RoHS Gost R

Notes

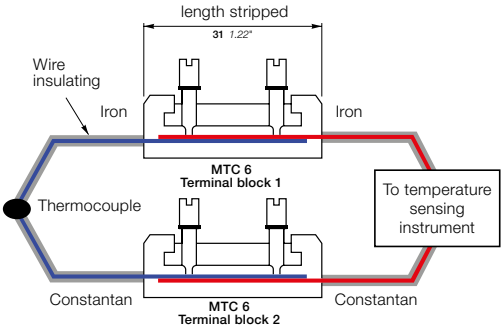

Figure 1: MTC6 with shield connector

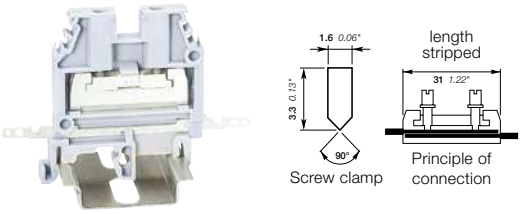

Figure 2

Universal terminal block

Other thermocouple terminal blocks are available with hardware (screws, clamps and connecting bar) which match the thermocouple material being used. This requires inventory of many different terminal block types.

MTC6 terminal block adapts to all thermocouple material. This "neutral" method of connection limits the introduction of foreign materials to an insignificant level. The thermocouple wire insulation is stripped (31 mm maximum) and the bar wires are superimposed on each another. The thermocouple wires are in contact over their complete 31 mm length and tightened at two points by round tip screws (see figure 1). The screws, made of plated brass, have only a mechanical function, that of holding the wires together with a point contact. Thus, the pressure points are not relevant in the connection environment. One thermocouple lead connects through one terminal block (see figure 1). The MTC6 requires only 6 mm of space, allowing 50 terminals per foot of rail.

Thermocouple shield wire connector bar

The MTC6 can be field or factory equipped with a shield connector bar (see figure 2). This bar, made of treated brass, fits in the lower part of the terminal block. It ensures the continuity of the thermocouple wire shield through the terminal block or to the ground with no additional spacing.

Accessories

1

2 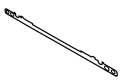

	Description			Color	Type	Part Number	Pkg pce	Weight (1 pce) g
1	End sections	2.8 mm	0.110 in	Grey	FEM6	1SNA118368R1600	20	2.40
2	Shield connectors				CBM5	1SNA178745R1400	50	

Complete list of accessories is indicated in the terminal block datasheet.
Some accessories such as jumper bars may modify the terminal block's ratings: complete information in the accessories catalogue pages.

Technical data valid for copper conductors only.

1SNC161121S0201 - Rev. B

D2.5/5.C3.L spring terminal blocks

Sensors / Actuators - 5 mm 0.197 in spacing

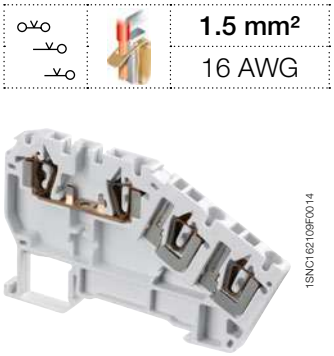

1SNC162109F0014

D2.5/5.C3.L

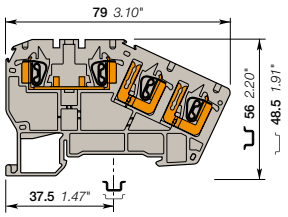

5 mm 0.197 in spacing

	1.5 mm²
	16 AWG

Description

- Save spacing with 3 decks terminal block, adapted for sensor/actuator in just 5 mm 0.197 in spacing,
- Easy to access thanks to the front wiring entry,
- Clamping contact pressure non dependent on the operator and automatic creeping compensation.

Ordering details

Description		Color	Type	Part Number		Pkg pce	Weight (1 pce) g
Sensor	3 wires	Grey	D2.5/5.C3.L	1SNA290350R2100		50	11.00

Main technical data

		IEC	UL	CSA
1 conductor per clamp	Rigid: Solid/Stranded	0.14-1.5 mm²		24-16 AWG
	Flexible without ferrule	0.14-1.5 mm²		
	Flexible with non insulated ferrule			
	Flexible with insulated ferrule	0.5-1 mm²		
	Gauge	A1		
Rated current / Rated cross section		17.5 A / 1.5 mm²		10 A / 16 AWG
Rated short-time withstand current (1s)		180 A		
Rated voltage		300 V		300 V
Impulse withstand voltage		4000 V		
Protection		IP20	NEMA 1	

The connecting capacity data for one Rigid: Solid/Stranded, or one Flexible conductor (when applicable) is a mandatory information required by IEC, UL and CSA standards (Copper conductors). All other data are provided as supplementary information only. For more details, please consult our CB, UL or CSA certificates and technical datasheet available on http://www.TE.com

RoHS CSA Gost R

Mounting instructions

Rail	TH 35-7.5, TH 35-15
Wire stripping length	9.5 mm 0.37 in
Tool	Flat screwdriver Ø 3.5 mm Ø 0.138 in

Notes

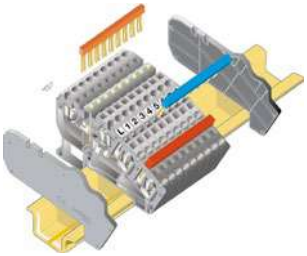

To obtain finger safety (IP20) of a terminal block assembly with comb type jumper bar, it is necessary to put one end section on each side of the terminal block assembly.

Accessories

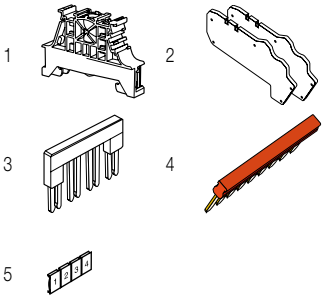

	Description			Color	Type	Part Number		Pkg pce	Weight (1 pce) g
1	**End stops**	5.2 mm	0.205 in	Dark grey	BAZ1	1SNK900002R0000		50	5.30
		10 mm	0.394 in		BAM4	1SNK900001R0000		50	14.00
2	**End section kits**	5 mm	0.197 in	Grey	FED5.C3.L	1SNA290358R2500		20	10.00
3	**Jumper bars**	2 poles	24 A	Orange	BJDL5-2	1SNA291102R2300		50	1.00
		3 poles			BJDL5-3	1SNA291103R2400		50	0.70
		4 poles			BJDL5-4	1SNA291104R2500		50	0.80
		5 poles			BJDL5-5	1SNA291105R2600		20	0.90
		10 poles			BJDL5-10	1SNA291110R2600		20	1.20
4	**Lateral jumper bars** 34 poles			Blue	PC5.34	1SNA290365R1400		10	18.00
				Red		1SNA290366R1500		10	18.00
				Green-yellow		1SNA290367R1600		10	18.00
5	**Terminal block markers** Blank card			White	RC55	1SNA230000R1200		1	2.90

Complete list of accessories is indicated in the terminal block datasheet.
Some accessories such as jumper bars may modify the terminal block's ratings: complete information in the accessories catalogue pages.

Technical data valid for copper conductors only.

D2.5/5.C3.L spring terminal blocks

Sensors / Actuators - 5 mm 0.197 in spacing

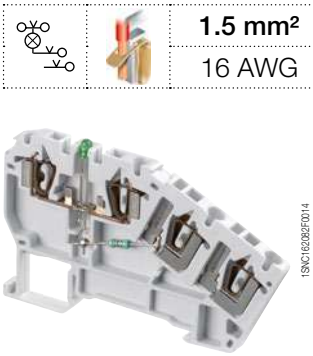

1.5 mm²
16 AWG

1SNC162082F0014

D2.5/5.C3.L

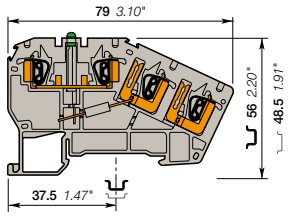

5 mm 0.197 in spacing

Description

- Save spacing with 3 decks terminal block, adapted for sensor/actuator in just 5 mm 0.197 in spacing,
- Easy to access thanks to the front wiring entry,
- Clamping contact pressure non dependent on the operator and automatic creeping compensation,
- Quickly identify the circuit status thanks to the indicator.

Ordering details

Description		Color	Type	Part Number		Pkg pce	Weight (1 pce) g
Sensor	3 wires with green bidirectional LED 24 V DC	Grey	D2.5/5.C3.L.L	1SNA290352R1700		50	11.00

Main technical data

		IEC	UL	CSA
1 conductor per clamp	Rigid: Solid/Stranded	0.14-1.5 mm²		24-16 AWG
	Flexible without ferrule	0.14-1.5 mm²		
	Flexible with non insulated ferrule			
	Flexible with insulated ferrule	0.5-1 mm²		
	Gauge	A1		
Rated current / Rated cross section		17.5 A / 1.5 mm²		10 A / 16 AWG
Rated short-time withstand current (1s)		180 A		
Rated voltage		300 V		300 V
Impulse withstand voltage		4000 V		
Protection		IP20	NEMA 1	

The connecting capacity data for one Rigid: Solid/Stranded, or one Flexible conductor (when applicable) is a mandatory information required by IEC, UL and CSA standards (Copper conductors). All other data are provided as supplementary information only. For more details, please consult our CB, UL or CSA certificates and technical datasheet available on http://www.TE.com

RoHS CSA Gost R

Mounting instructions

Rail	TH 35-7.5, TH 35-15
Wire stripping length	9.5 mm 0.37 in
Tool	Flat screwdriver Ø 3.5 mm Ø 0.138 in

Notes

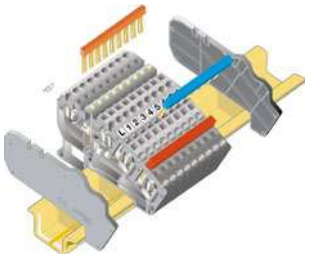

To obtain finger safety (IP20) of a terminal block assembly with comb type jumper bar, it is necessary to put one end section on each side of the terminal block assembly.

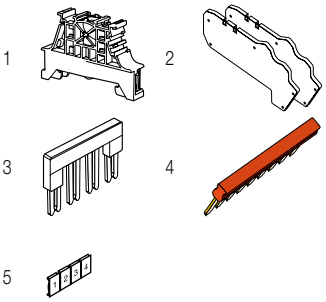

Accessories

	Description			Color	Type	Part Number		Pkg pce	Weight (1 pce) g
1	**End stops**	5.2 mm	0.205 in	Dark grey	BAZ1	1SNK900002R0000		50	5.30
		10 mm	0.394 in		BAM4	1SNK900001R0000		50	14.00
2	**End section kits**	5 mm	0.197 in.	Grey	FED5.C3.L	1SNA290358R2500		20	10.00
3	**Jumper bars**	2 poles	24 A	Orange	BJDL5-2	1SNA291102R2300		50	1.00
		3 poles			BJDL5-3	1SNA291103R2400		50	0.70
		4 poles			BJDL5-4	1SNA291104R2500		50	0.80
		5 poles			BJDL5-5	1SNA291105R2600		20	0.90
		10 poles			BJDL5-10	1SNA291110R2600		20	1.20
4	**Lateral jumper bars**	34 poles		Blue	PC5.34	1SNA290365R1400		10	18.00
				Red		1SNA290366R1500		10	18.00
				Green-yellow		1SNA290367R1600		10	18.00
5	**Terminal block markers**	Blank card		White	RC55	1SNA230000R1200		1	2.90

Complete list of accessories is indicated in the terminal block datasheet.
Some accessories such as jumper bars may modify the terminal block's ratings: complete information in the accessories catalogue pages.

Technical data valid for copper conductors only.

1SNC162028S0201 - Rev. A

D2.5/5.C4.L spring terminal blocks

Sensors / Actuators - 5 mm 0.197 in spacing

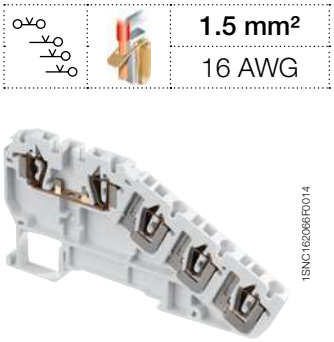

D2.5/5.C4.L

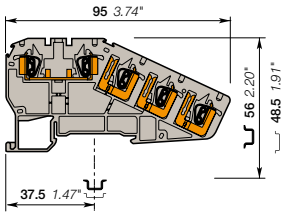

5 mm 0.197 in spacing

	1.5 mm²
	16 AWG

Description

- Save spacing with 4 decks terminal block, adapted for sensor/actuator in just 5 mm 0.197 in spacing,
- Easy to access thanks to the front wiring entry,
- Clamping contact pressure non dependent on the operator and automatic creeping compensation.

Ordering details

Description		Color	Type	Part Number		Pkg pce	Weight (1 pce) g
Sensor	4 wires sensor	Grey	D2.5/5.C4.L	1SNA290354R1100		50	13.00

Main technical data

		IEC	UL	CSA
1 conductor per clamp	Rigid: Solid/Stranded	0.14-1.5 mm²		24-16 AWG
	Flexible without ferrule	0.14-1.5 mm²		
	Flexible with non insulated ferrule			
	Flexible with insulated ferrule	0.5-1 mm²		
	Gauge	A1		
Rated current / Rated cross section		17.5 A / 1.5 mm²		10 A / 16 AWG
Rated short-time withstand current (1s)		180 A		
Rated voltage		300 V		300 V
Impulse withstand voltage		4000 V		
Protection		IP20	NEMA 1	

The connecting capacity data for one Rigid: Solid/Stranded, or one Flexible conductor (when applicable) is a mandatory information required by IEC, UL and CSA standards (Copper conductors). All other data are provided as supplementary information only. For more details, please consult our CB, UL or CSA certificates and technical datasheet available on http://www.TE.com

RoHS CSA Gost R

Mounting instructions

Rail	TH 35-7.5, TH 35-15
Wire stripping length	9.5 mm 0.37 in
Tool	Flat screwdriver Ø 3.5 mm Ø 0.138 in

Notes

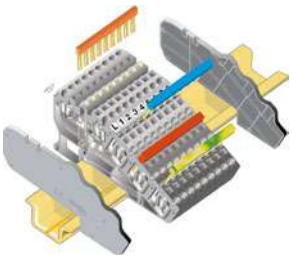

To obtain finger safety (IP20) of a terminal block assembly with comb type jumper bar, it is necessary to put one end section on each side of the terminal block assembly.

Accessories

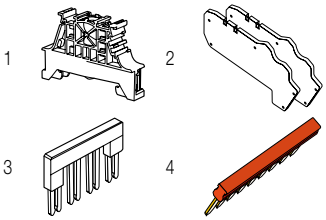

	Description			Color	Type	Part Number		Pkg pce	Weight (1 pce) g
1	**End stops**	5.2 mm	0.205 in	Dark grey	BAZ1	1SNK900002R0000		50	5.30
		10 mm	0.394 in		BAM4	1SNK900001R0000		50	14.00
2	**End section kits**	5 mm	0.197 in	Grey	FED5.C4.L	1SNA290360R2300		20	10.00
3	**Jumper bars**	2 poles	24 A	Orange	BJDL5-2	1SNA291102R2300		50	1.00
		3 poles			BJDL5-3	1SNA291103R2400		50	0.70
		4 poles			BJDL5-4	1SNA291104R2500		50	0.80
		5 poles			BJDL5-5	1SNA291105R2600		20	0.90
		10 poles			BJDL5-10	1SNA291110R2600		20	1.20
4	**Lateral jumper bars** 34 poles			Blue	PC5.34	1SNA290365R1400		10	18.00
				Red		1SNA290366R1500		10	18.00
				Green-yellow		1SNA290367R1600		10	18.00
5	**Terminal block markers** Blank card			White	RC55	1SNA230000R1200		1	2.90

Complete list of accessories is indicated in the terminal block datasheet.
Some accessories such as jumper bars may modify the terminal block's ratings: complete information in the accessories catalogue pages.

Technical data valid for copper conductors only.

1SNC162029S0201 - Rev. A

D2.5/5.C4.L spring terminal blocks

Sensors / Actuators - 5 mm 0.197 in spacing

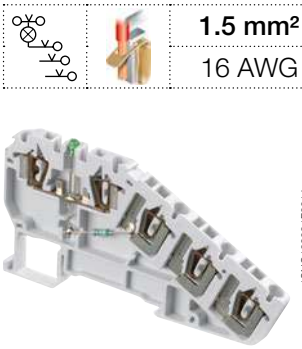

1.5 mm²
16 AWG

1SNC162081F0014

D2.5/5.C4.L

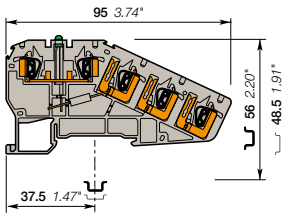

5 mm 0.197 in spacing

Description

- Save spacing with 4 decks terminal block, adapted for sensor/actuator in just 5 mm 0.197 in spacing,
- Easy to access thanks to the front wiring entry,
- Clamping contact pressure non dependent on the operator and automatic creeping compensation,
- Quickly identify the circuit status thanks to the indicator.

Ordering details

Description		Color	Type	Part Number		Pkg pce	Weight (1 pce) g
Sensor	4 wires with bidirectional green LED 24 V DC	Grey	D2.5/5.C4.L.L	1SNA290356R1300		50	13.00

Main technical data

		IEC	UL	CSA
1 conductor per clamp	Rigid: Solid/Stranded	0.14-1.5 mm²		24-16 AWG
	Flexible without ferrule	0.14-1.5 mm²		
	Flexible with non insulated ferrule			
	Flexible with insulated ferrule	0.5-1 mm²		
	Gauge	A1		
Rated current / Rated cross section		17.5 A / 1.5 mm²		10 A / 16 AWG
Rated short-time withstand current (1s)		180 A		
Rated voltage		300 V		300 V
Impulse withstand voltage		4000 V		
Protection		IP20	NEMA 1	

The connecting capacity data for one Rigid: Solid/Stranded, or one Flexible conductor (when applicable) is a mandatory information required by IEC, UL and CSA standards (Copper conductors). All other data are provided as supplementary information only. For more details, please consult our CB, UL or CSA certificates and technical datasheet available on http://www.TE.com

RoHS CSA Gost R

Mounting instructions

Rail	TH 35-7.5, TH 35-15
Wire stripping length	9.5 mm 0.37 in
Tool	Flat screwdriver Ø 3.5 mm Ø 0.138 in

Notes

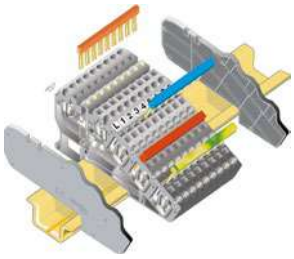

To obtain finger safety (IP20) of a terminal block assembly with comb type jumper bar, it is necessary to put one end section on each side of the terminal block assembly.

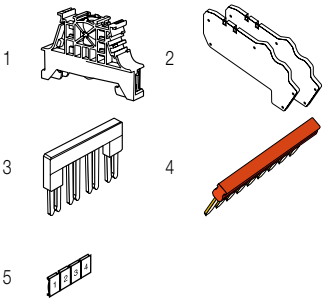

Accessories

	Description			Color	Type	Part Number		Pkg pce	Weight (1 pce) g
1	**End stops**	5.2 mm	0.205 in	Dark grey	BAZ1	1SNK900002R0000		50	5.30
		10 mm	0.394 in		BAM4	1SNK900001R0000		50	14.00
2	**End section kits**	5 mm	0.197 in	Grey	FED5.C4.L	1SNA290360R2300		20	10.00
3	**Jumper bars**	2 poles	24 A	Orange	BJDL5-2	1SNA291102R2300		50	1.00
		3 poles			BJDL5-3	1SNA291103R2400		50	0.70
		4 poles			BJDL5-4	1SNA291104R2500		50	0.80
		5 poles			BJDL5-5	1SNA291105R2600		20	0.90
		10 poles			BJDL5-10	1SNA291110R2600		20	1.20
4	**Lateral jumper bars**	34 poles		Blue	PC5.34	1SNA290365R1400		10	18.00
				Red		1SNA290366R1500		10	18.00
				Green-yellow		1SNA290367R1600		10	18.00
5	**Terminal block markers**	Blank card		White	RC55	1SNA230000R1200		1	2.90

Complete list of accessories is indicated in the terminal block datasheet.
Some accessories such as jumper bars may modify the terminal block's ratings: complete information in the accessories catalogue pages.

Technical data valid for copper conductors only.

1SNC162030S0201 - Rev. B

D1/5.C3.ADO IDC terminal blocks

Sensors / Actuators ADO-ADO - 5 mm 0.197 in spacing

1 mm²
20 AWG

1SNC163136F0014

D1/5.C3.ADO

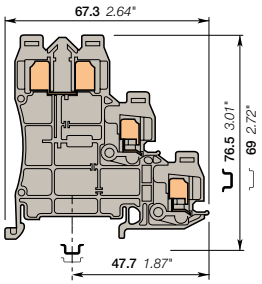

5 mm 0.197 in spacing

Description

- Save spacing with 3 decks terminal block, adapted for sensor/actuator in just 5 mm 0.197 in spacing,
- With the TE Connectivity ADO System®, experience the fastest and most reliable connection on the market,
- Designed for control applications exposed to severe constrains (vibrations, shocks, corrosion etc.),
- Up to 2 wires on the upper deck.

Ordering details

Description		Color	Type	Part Number		Pkg pce	Weight (1 pce) g
Sensor	For 3 wire sensor	Grey	D1/5.C3.ADO	1SNA399689R1300		50	9.00

Main technical data

		IEC	UL	CSA
ADO	Rigid: Solid/Stranded	0.2-1 mm²		24-20 AWG
	Flexible without ferrule	0.22-1 mm²		
Screw clamp	Rigid: Solid/Stranded			
	Flexible without ferrule			
	Flexible with insulated ferrule			
	Gauge			
Rated current / Rated cross section		13.5 A / 1 mm²		12 A / 20 AWG
Rated short-time withstand current (1s)		120 A		
Rated voltage		250 V		600 V
Impulse withstand voltage		8000 V		
Protection		IP20	NEMA 1	

Mounting instructions

Rail		TH 35-7.5, TH 35-15
Wire stripping length		
Tool		
Torque		

The connecting capacity data for one Rigid: Solid/Stranded, or one Flexible conductor (when applicable) is a mandatory information required by IEC, UL and CSA standards (Copper conductors). All other data are provided as supplementary information only. For more details, please consult our CB, UL or CSA certificates and technical datasheet available on http://www.TE.com

RoHS cCSAus Gost R

Notes

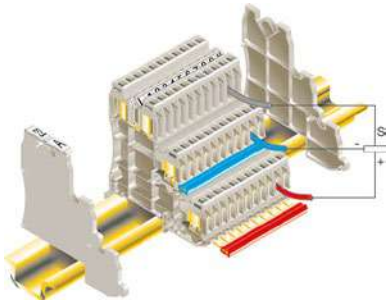

Accessories

	Description			Color	Type	Part Number		Pkg pce	Weight (1 pce) g
1	**End stops**	10 mm	0.394 in	Dark grey	BAM4	1SNK900001R0000		50	14.00
		5.2 mm	0.205 in		BAZ1	1SNK900002R0000		50	5.30
2	**End section kits**			Grey	FED5.C3.ADO	1SNA399678R2700		20	10.00
3	**Lateral jumper bars**	10 poles		Red	PC52.10	1SNA399683R0500		10	5.00
				Blue		1SNA399684R0600		10	5.00
				Green-yellow		1SNA399685R0700		10	5.00
		66 poles		Red	PC52.66	1SNA399707R1500		5	30.00
				Blue		1SNA399708R2600		5	30.00
				Green-yellow		1SNA399709R2700		5	30.00
4	**Tools**	Semi automatic tool			OUPAD	1SNA178944R0400		1	205.00
		Hand tool			OUMAD	1SNA179466R0600		1	29.00
5	**Terminal block markers**	Blank card		White	RC55	1SNA230000R1200		1	2.90

1 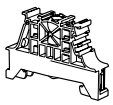
2 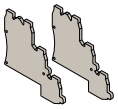
3
4
5

Complete list of accessories is indicated in the terminal block datasheet.
Some accessories such as jumper bars may modify the terminal block's ratings: complete information in the accessories catalogue pages.

Technical data valid for copper conductors only.

1SNC163044S0201 - Rev. B

D1/5.C3.ADO IDC terminal blocks

Sensors / Actuators ADO-ADO - 5 mm 0.197 in spacing

1 mm²
20 AWG

1SNC163125F0014

D1/5.C3.ADO

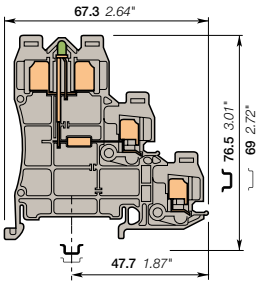

5 mm 0.197 in spacing

Description

- Save spacing with 3 decks terminal block, adapted for sensor/actuator in just 5 mm 0.197 in spacing,
- With the TE Connectivity ADO System®, experience the fastest and most reliable connection on the market,
- Designed for control applications exposed to severe constrains (vibrations, shocks, corrosion etc.),
- Up to 2 wires on the upper deck.

Ordering details

Description		Color	Type	Part Number		Pkg pce	Weight (1 pce) g
Sensor	For 3 wire sensor with green bidirectional LED 24 VDC	Grey	D1/5.C3.ADO.L	1SNA399690R1000		50	10.00

Main technical data

		IEC	UL	CSA
ADO	Rigid: Solid/Stranded	0.2-1 mm²		24-20 AWG
	Flexible without ferrule	0.22-1 mm²		
Screw clamp	Rigid: Solid/Stranded			
	Flexible without ferrule			
	Flexible with insulated ferrule			
	Gauge			
Rated current / Rated cross section		13.5 A / 1 mm²		12 A / 20 AWG
Rated short-time withstand current (1s)		120 A		
Rated voltage		250 V		600 V
Impulse withstand voltage		8000 V		
Protection		IP20	NEMA 1	

Mounting instructions

Rail	TH 35-7.5, TH 35-15
Wire stripping length	
Tool	
Torque	

The connecting capacity data for one Rigid: Solid/Stranded, or one Flexible conductor (when applicable) is a mandatory information required by IEC, UL and CSA standards (Copper conductors). All other data are provided as supplementary information only. For more details, please consult our CB, UL or CSA certificates and technical datasheet available on http://www.TE.com

RoHS cCSAus Gost R

Notes

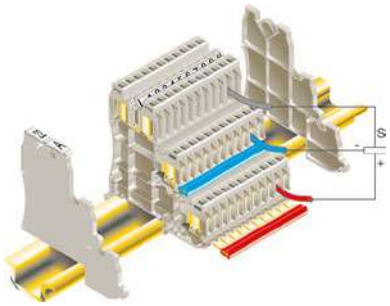

Accessories

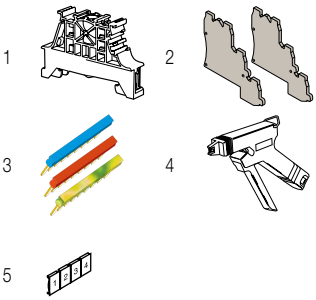

	Description			Color	Type	Part Number		Pkg pce	Weight (1 pce) g
1	**End stops**	10 mm	0.394 in	Dark grey	BAM4	1SNK900001R0000		50	14.00
		5.2 mm	0.205 in		BAZ1	1SNK900002R0000		50	5.30
2	**End section kits**			Grey	FED5.C3.ADO	1SNA399678R2700		20	10.00
3	**Lateral jumper bars**	10 poles		Red	PC52.10	1SNA399683R0500		10	5.00
				Blue		1SNA399684R0600		10	5.00
				Green-yellow		1SNA399685R0700		10	5.00
		66 poles		Red	PC52.66	1SNA399707R1500		5	30.00
				Blue		1SNA399708R2600		5	30.00
				Green-yellow		1SNA399709R2700		5	30.00
4	**Tools**	Semi automatic tool			OUPAD	1SNA178944R0400		1	205.00
		Hand tool			OUMAD	1SNA179466R0600		1	29.00
5	**Terminal block markers**	Blank card		White	RC55	1SNA230000R1200		1	2.90

Complete list of accessories is indicated in the terminal block datasheet.
Some accessories such as jumper bars may modify the terminal block's ratings: complete information in the accessories catalogue pages.

Technical data valid for copper conductors only.

D1/5.C4.ADO IDC terminal blocks

Sensors / Actuators ADO-ADO - 5 mm 0.197 in spacing

1 mm²
20 AWG

1SNC163137F0014

D1/5.C4.ADO

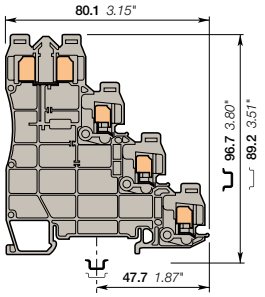

5 mm 0.197 in spacing

Description

- Save spacing with 4 decks terminal block, adapted for sensor/actuator in just 5 mm 0.197 in spacing,
- With the TE Connectivity ADO System®, experience the fastest and most reliable connection on the market,
- Designed for control applications exposed to severe constrains (vibrations, shocks, corrosion etc.),
- Up to 2 wires on the upper deck.

Ordering details

Description		Color	Type	Part Number		Pkg pce	Weight (1 pce) g
Sensor	For 4 wire sensor	Grey	D1/5.C4.ADO	1SNA399692R0600		50	

Main technical data

		IEC	UL	CSA
ADO	Rigid: Solid/Stranded	0.2-1 mm²		24-20 AWG
	Flexible without ferrule	0.22-1 mm²		
Screw clamp	Rigid: Solid/Stranded			
	Flexible without ferrule			
	Flexible with insulated ferrule			
	Gauge			
Rated current / Rated cross section		13.5 A / 1 mm²		12 A / 20 AWG
Rated short-time withstand current (1s)		120 A		
Rated voltage		250 V		600 V
Impulse withstand voltage		8000 V		
Protection		IP20	NEMA 1	

Mounting instructions

Rail		TH 35-7.5, TH 35-15
Wire stripping length		
Tool		
Torque		

The connecting capacity data for one Rigid: Solid/Stranded, or one Flexible conductor (when applicable) is a mandatory information required by IEC, UL and CSA standards (Copper conductors). All other data are provided as supplementary information only. For more details, please consult our CB, UL or CSA certificates and technical datasheet available on http://www.TE.com

RoHS cCSAus Gost R

Notes

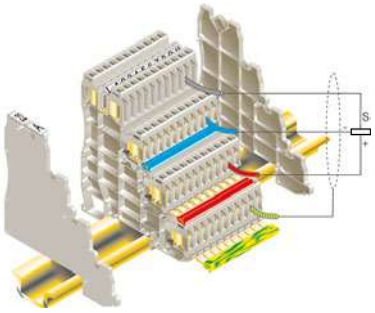

Accessories

	Description			Color	Type	Part Number		Pkg pce	Weight (1 pce) g
1	**End stops**	10 mm	0.394 in	Dark grey	BAZH1	1SNK900102R0000		20	24.00
2	**End section kits**			Grey	FED5.C4.ADO	1SNA399679R2000		10	10.00
3	**Lateral jumper bars**	10 poles		Red	PC52.10	1SNA399683R0500		10	5.00
				Blue		1SNA399684R0600		10	5.00
				Green-yellow		1SNA399685R0700		10	5.00
		66 poles		Red	PC52.66	1SNA399707R1500		5	30.00
				Blue		1SNA399708R2600		5	30.00
				Green-yellow		1SNA399709R2700		5	30.00
4	**Tools**	Semi automatic tool			OUPAD	1SNA178944R0400		1	205.00
		Hand tool			OUMAD	1SNA179466R0600		1	29.00
5	**Terminal block markers**	Blank card		White	RC55	1SNA230000R1200		1	2.90

1
2 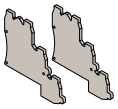
3
4
5

Complete list of accessories is indicated in the terminal block datasheet.
Some accessories such as jumper bars may modify the terminal block's ratings: complete information in the accessories catalogue pages.

Technical data valid for copper conductors only.

D1/5.C4.ADO IDC terminal blocks

Sensors / Actuators ADO-ADO - 5 mm 0.197 in spacing

1 mm²

1SNC163138F0014

D1/5.C4.ADO

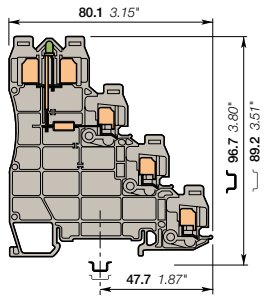

5 mm 0.197 in spacing

Description

- Save spacing with 4 decks terminal block, adapted for sensor/actuator in just 5 mm 0.197 in spacing,
- With the TE Connectivity ADO System®, experience the fastest and most reliable connection on the market,
- Designed for control applications exposed to severe constrains (vibrations, shocks, corrosion etc.),
- Up to 2 wires on the upper deck.

Ordering details

Description		Color	Type	Part Number		Pkg pce	Weight (1 pce) g
Sensor	For 4 wire sensor with green bidirectional LED 24 VDC	Grey	D1/5.C4.ADO.L	1SNA399693R0700		50	

Main technical data

		IEC	UL	CSA
ADO	Rigid: Solid/Stranded	0.2-1 mm²		
	Flexible without ferrule	0.22-1 mm²		
Screw clamp	Rigid: Solid/Stranded			
	Flexible without ferrule			
	Flexible with insulated ferrule			
	Gauge			
Rated current / Rated cross section		13.5 A / 1 mm²		
Rated short-time withstand current (1s)		120 A		
Rated voltage		250 V		
Impulse withstand voltage		8000 V		
Protection		IP20	NEMA 1	

Mounting instructions

Rail		TH 35-7.5, TH 35-15
Wire stripping length		
Tool		
Torque		

The connecting capacity data for one Rigid: Solid/Stranded, or one Flexible conductor (when applicable) is a mandatory information required by IEC, UL and CSA standards (Copper conductors). All other data are provided as supplementary information only. For more details, please consult our CB, UL or CSA certificates and technical datasheet available on http://www.TE.com

RoHS RoHS Gost R

Notes

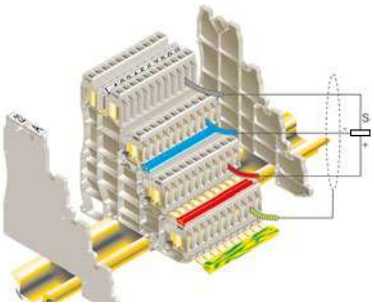

Accessories

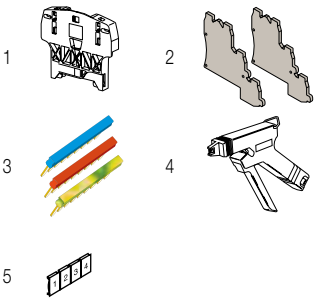

	Description			Color	Type	Part Number		Pkg pce	Weight (1 pce) g
1	**End stops**	10 mm	0.394 in	Dark grey	BAZH1	1SNK900102R0000		20	24.00
2	**End section kits**			Grey	FED5.C4.ADO	1SNA399679R2000		10	10.00
3	**Lateral jumper bars**	10 poles		Red	PC52.10	1SNA399683R0500		10	5.00
				Blue		1SNA399684R0600		10	5.00
				Green-yellow		1SNA399685R0700		10	5.00
		66 poles		Red	PC52.66	1SNA399707R1500		5	30.00
				Blue		1SNA399708R2600		5	30.00
				Green-yellow		1SNA399709R2700		5	30.00
4	**Tools**	Semi automatic tool			OUPAD	1SNA178944R0400		1	205.00
		Hand tool			OUMAD	1SNA179466R0600		1	29.00
5	**Terminal block markers**	Blank card		White	RC55	1SNA230000R1200		1	2.90

Complete list of accessories is indicated in the terminal block datasheet.
Some accessories such as jumper bars may modify the terminal block's ratings: complete information in the accessories catalogue pages.

Technical data valid for copper conductors only.

1SNC163047S0201 - Rev. B

1SNC160103S0201

Dedicated applications terminal blocks
Installation terminal blocks

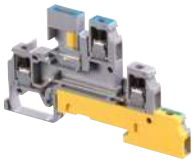
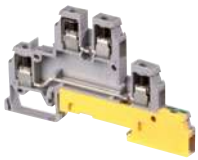

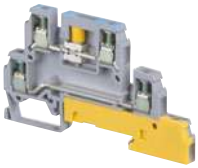
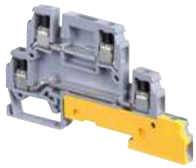

Technologies presentation			208
Overview			210

Screw clamp technology

Multi-level terminal blocks compatible with busbar

4 mm² / 12 AWG	**D4/6.NTLP**	Disconnect neutral + feed-through + ground	213
	D4/6.NLP	Neutral + feed-through + ground	214
	D4/6.LLP	Feed-through + ground	215
	D4/6.LL	Feed-through	216
	D4/6.LNTP1 & D4/6.LNTP3	Disconnect neutral + feed-through + ground	217
	D4/6.LNTP2 & D4/6.LNTP8	Neutral + feed-through + ground	219
	D4/6.LNTP4 & D4/6.LNTP7	Feed-through + ground	221
	D4/6.LNTP6	Feed-through	223

Multi-level terminal blocks

4 mm² / 12 AWG	**D4/6.A.NTLP**	Disconnect neutral + feed-through + ground	224
	D4/6.A.LLP	Feed-through + ground	225

Compatible with busbar

2.5 mm²	**MA2.5/5.NT**	Neutral disconnect	226
4 mm²	**M4/6.NT**	Neutral disconnect	227
6 mm²	**M6/8.NT**	Neutral disconnect	228
10 mm²	**M10/10.NT**	Neutral disconnect	229
16 mm²	**M16/12.NT**	Neutral disconnect	230
35 mm²	**M35/16.NT**	Neutral disconnect	231

Spring clamp technology

Multi-level terminal blocks compatible with busbar

2.5 mm² / 12 AWG	**D2.5/5.NTLP.L**	Disconnect neutral + feed-through + ground	232
	D2.5/5.NLP.L	Neutral + feed-through + ground	233
	D2.5/5.NL.L	Neutral + feed-through	234
	D2.5/5.LLP.L	Feed-through + ground	235
	D2.5/5.LL.L	Feed-through	236

1SNC160103S0201

The preferred choice for building industry

The installation terminal blocks are largely used in distribution cabinets of public buildings and meet wiring and connection requirements of installations designed in accordance with DIN VDE 0100 or DIN VDE 0108.

They allow:
- Compact signal distribution thanks to multi-level terminal locks
- Insulation test without disconnecting the neutral conductor thanks to neutral disconnect function on TNS or TNC-S networks.

Select from our various choice of functions and technologies

Installation terminal blocks

Our product family offer multi-circuit configuration to ease the distribution of single phase or 3 phase circuits.
Installation terminal blocks are proposed in screw clamp technology.
Various configurations allow distribution of feed-through, neutral, neutral disconnect and ground circuits in a compact format.
Select from our single type terminal blocks or prefer multi-circuit compact and closed solution combining up to 9 circuits on one single terminal block.
Neutral bar is aligned with standard single deck terminal blocks and ensures full compatibility with standard feed-through, neutral disconnect, or ground terminal blocks.

Neutral disconnect terminal blocks

Neutral disconnect function is mandatory on TNS or TN-C-S networks used in public buildings and installation complying with VDE 0108.
Standard specifies:
"The distribution must be designed so that it is possible to measure the insulation resistance of all conductors to ground for each individual outgoing circuit with conductor cross sections up to 10 mm².
This measurement must be performed without disconnecting the neutral conductor. e.g. through the installation of neutral conductor disconnect terminal blocks."
Our terminals allow simple connection or disconnection of neutral bar thanks to a sliding link.

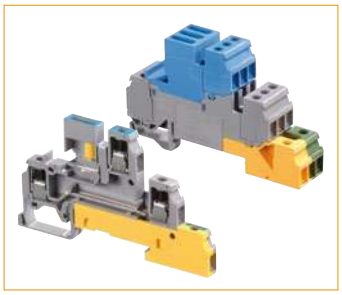

Multi-level screw clamp terminal blocks

Multi-level spring clamp terminal blocks

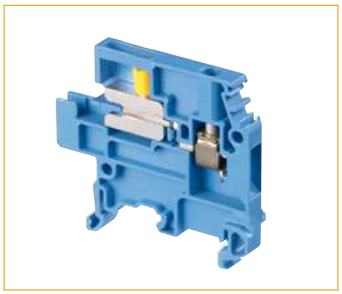

Neutral disconnect: screw clamp terminal blocks

1SNC161166S0201

3 phase distribution example with installation screw clamp terminal blocks

D4/6.NTLP allows single phase distribution and neutral disconnect
D4/6.LL complement for 3 phase configuration

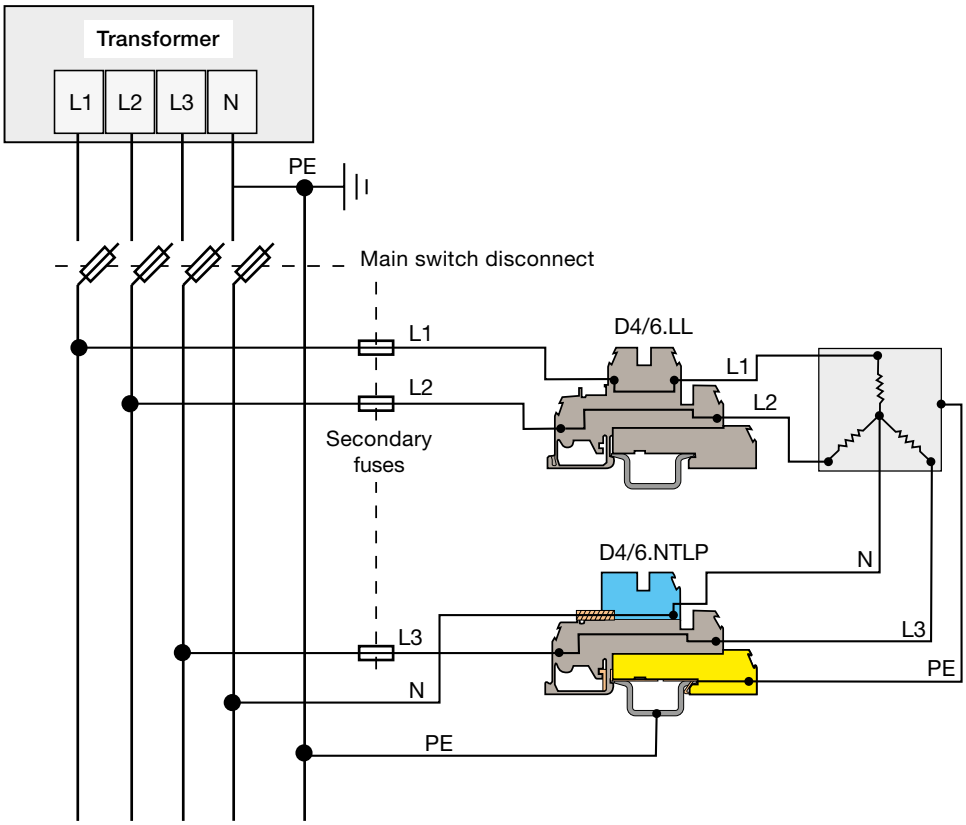

1SNC161169S0201

Screw clamp technology, multi-level terminal blocks compatible with busbar

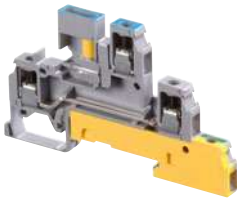
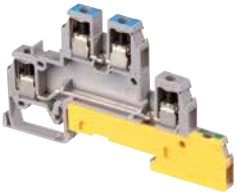
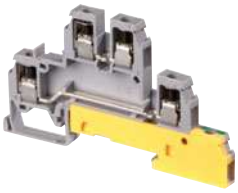
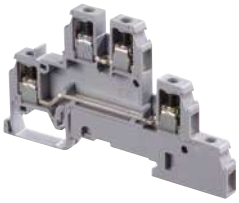

Section		NTLP	NLP	LLP	LL
IEC	UL/CSA				
4 mm²	12 AWG	**D4/6.NTLP** 6 mm 0.236 in	**D4/6.NLP** 6 mm 0.236 in	**D4/6.LLP** 6 mm 0.236 in	**D4/6.LL** 6 mm 0.236 in

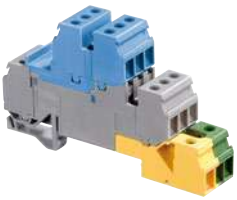

Section		NTLP		NLP		LLP		LL
IEC	UL/CSA							
4 mm²	12 AWG	**D4/6.LNTP1**	**D4/6.LNTP3**	**D4/6.LNTP2**	**D4/6.LNTP8**	**D4/6.LNTP4**	**D4/6.LNTP7**	**D4/6.LNTP6**
		6 mm 0.236 in		6 mm 0.236 in		6 mm 0.236 in		6 mm 0.236 in

Screw clamp technology, multi-level terminal blocks

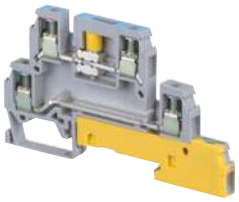
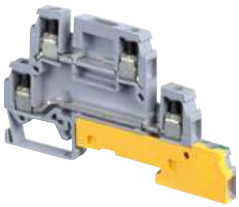

Section		NTLP	NLP	LLP	LL
IEC	UL/CSA				
4 mm²	12 AWG	**D4/6.A.NTLP** 6 mm 0.236 in		**D4/6.A.LLP** 6 mm 0.236 in	

1SNC160102S0201

Screw clamp technology, compatible with busbar

Section		Neutral disconnect		Feed-through		Ground	
IEC	UL/CSA						
2.5 mm		MA2.5/5.NT	5 mm 0.197 in	MA2.5/5	5 mm 0.197 in	MA2.5/5.P	5 mm 0.197 in
4 mm²	12 AWG	M4/6.NT	6 mm 0.236 in	M4/6	6 mm 0.236 in	M4/6.P	6 mm 0.236 in
6 mm²	8 AWG	M6/8.NT	8 mm 0.315 in	M6/8	8 mm 0.315 in	M6/8.P	8 mm 0.315 in
10 mm²	6 AWG	M10/10.NT	10 mm 0.394 in	M10/10	10 mm 0.394 in	M10/10.P	10 mm 0.394 in
16 mm²		M16/12.NT	12 mm 0.472 in	M16/12	12 mm 0.472 in	M16/12.P	12 mm 0.472 in
35 mm²	0 AWG	M35/16.NT	17 mm 0.669 in	M35/16	16 mm 0.630 in	M35/16.P	16 mm 0.630 in

1SNC160102S0201

Spring clamp technology, multi-level terminal blocks compatible with busbar

		NTLP	NLP	NL	LLP	LL
Section						
IEC	UL/CSA					
2.5 mm²	12 AWG	D2.5/5.NTLP.L 5 mm 0.197 in	D2.5/5.NLP.L 5 mm 0.197 in	D2.5/5.NL.L 5 mm 0.197 in	D2.5/5.LLP.L 5 mm 0.197 in	D2.5/5.LL.L 5 mm 0.197 in

1SNC160102S0201

D4/6.NTLP screw clamp terminal blocks
Installation - 6 mm 0.236 in spacing

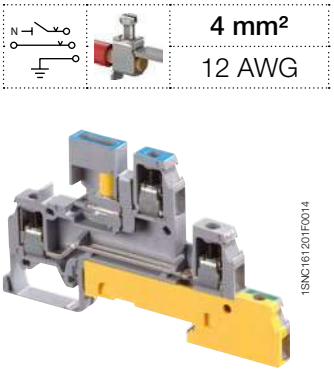

4 mm²	
12 AWG	

D4/6.NTLP

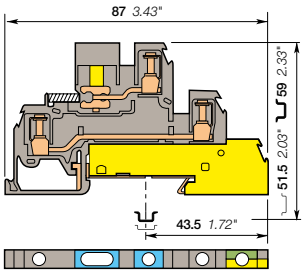

6 mm 0.236 in spacing

Description

- According to DIN 43880 standards (dimension above the rail 35 x 7.5 ≤ 44 mm),
- Compatible with busbar.

Ordering details

Description		Color	Type	Part Number		Pkg pce	Weight (1 pce) g
Installation	Disconnect neutral + feed-through + ground	Grey, blue, Green-yellow	D4/6.NTLP	1SNA110439R2200		20	20.00

Main technical data

		IEC	UL	CSA
1 conductor per clamp	Rigid: Solid/Stranded	0.2-4 mm²	18-12 AWG	
	Flexible without ferrule	0.2-4 mm²		
	Flexible with insulated ferrule			
	Gauge	A4		
Rated current / Rated cross section		30 A / 4 mm²	20 A / 12 AWG	
Rated short-time withstand current (1s)		480 A		
Rated voltage		320 V	300 V	
Impulse withstand voltage		4000 V		
Protection		IP20	NEMA 1	

Mounting instructions

Rail	G32, TH 35-7.5, TH 35-15
Wire stripping length	9.5 mm 0.37 in
Screw clamp Tool	Flat screwdriver Ø 4 mm Ø 0.157 in
Torque	0.4 - 0.8 N.m 3.5 - 7 lb.in
Disconnect device Tool	Flat screwdriver Ø 4 mm Ø 0.157 in
Torque	0.4 - 0.6 N.m 3.5 - 5.3 lb.in

The connecting capacity data for one Rigid: Solid/Stranded, or one Flexible conductor (when applicable) is a mandatory information required by IEC, UL and CSA standards (Copper conductors). All other data are provided as supplementary information only. For more details, please consult our CB, UL or CSA certificates and technical datasheet available on http://www.TE.com

CE RoHS USR CNR Gost R

Accessories

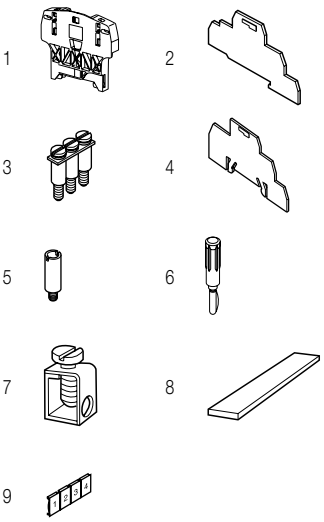

	Description			Color	Type	Part Number		Pkg pce	Weight (1 pce) g
1	**End stops**	10 mm	0.394 in	Dark grey	BAZH1	1SNK900102R0000		20	24.00
2	**End sections**	1 mm	0.039 in	Grey	FED6	1SNA116964R1200		20	3.00
3	**Jumper bars**	2 poles	32 A		BJM62	1SNA173217R2600		10	2.00
		3 poles				1SNA173218R0700		10	3.00
		4 poles				1SNA173219R0000		10	4.00
		5 poles				1SNA173221R2200		10	5.00
		10 poles				1SNA173226R2700		10	10.00
4	**Circuit separators**	1.5 mm	0.059 in	Grey	SCFD	1SNA114117R0700		10	10.00
5	**Test sockets**	DIA 2 mm 0.079 in			AL2	1SNA167319R0600		50	
6	**Test plugs**	DIA 2 mm 0.079 in		Black	FC2	1SNA007865R2600		100	
7	**Clamps**	0.5-35 mm²			SFB1	1SNA163860R0500		50	12.00
		16-35 mm² 6-2 AWG			SFB2	1SNA168956R0600		50	11.00
8	**Busbars**	Busbars			BO3	1SNA164406R2400		1	
9	**Terminal block markers**	Blank card		White	RC65	1SNA232000R0000		1	3.60

Complete list of accessories is indicated in the terminal block datasheet.
Some accessories such as jumper bars may modify the terminal block's ratings: complete information in the accessories catalogue pages.

Technical data valid for copper conductors only.

1SNC161064S0201 - Rev. A

D4/6.NLP screw clamp terminal blocks
Installation - 6 mm 0.236 in spacing

4 mm²	
12 AWG	

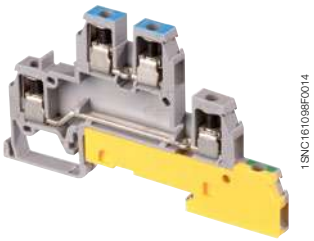

D4/6.NLP

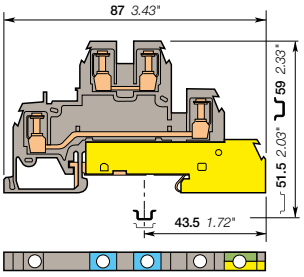

6 mm 0.236 in spacing

Description

- According to DIN 43880 standards (dimension above the rail 35 x 7.5 ≤ 44 mm),
- Compatible with busbar.

Ordering details

Description		Color	Type	Part Number		Pkg pce	Weight (1 pce) g
Installation	Neutral + feed-through + ground	Grey, blue, Green-yellow	D4/6.NLP	1SNA110440R0700		20	20.00

Main technical data

		IEC	UL	CSA
1 conductor per clamp	Rigid: Solid/Stranded	0.2-4 mm²	18-12 AWG	
	Flexible without ferrule	0.2-4 mm²		
	Flexible with insulated ferrule			
	Gauge	A4		
Rated current / Rated cross section		30 A / 4 mm²	20 A / 12 AWG	
Rated short-time withstand current (1s)		480 A		
Rated voltage		400 V	300 V	
Impulse withstand voltage		6000 V		
Protection		IP20	NEMA 1	

Mounting instructions

Rail	G32, TH 35-7.5, TH 35-15
Wire stripping length	9.5 mm 0.37 in
Tool	Flat screwdriver Ø 4 mm Ø 0.157 in
Torque	0.4 - 0.8 N.m 3.5 - 7 lb.in

The connecting capacity data for one Rigid: Solid/Stranded, or one Flexible conductor (when applicable) is a mandatory information required by IEC, UL and CSA standards (Copper conductors). All other data are provided as supplementary information only. For more details, please consult our CB, UL or CSA certificates and technical datasheet available on http://www.TE.com

CE RoHS USR CNR Gost R

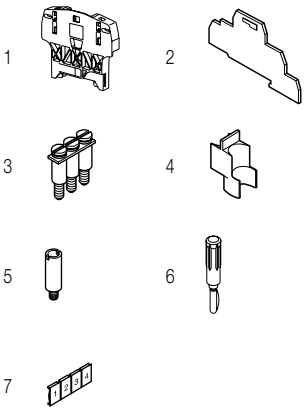

Accessories

	Description			Color	Type	Part Number		Pkg pce	Weight (1 pce) g
1	**End stops**	10 mm	0.394 in	Dark grey	BAZH1	1SNK900102R0000		20	24.00
2	**End sections**	1 mm	0.039 in	Grey	FED6	1SNA116964R1200		20	3.00
3	**Jumper bars**	2 poles	32 A		BJM62	1SNA173217R2600		10	2.00
		3 poles				1SNA173218R0700		10	3.00
		4 poles				1SNA173219R0000		10	4.00
		5 poles				1SNA173221R2200		10	5.00
		10 poles				1SNA173226R2700		10	10.00
4	**Circuit separators**	0 mm	0 in	White	SCD	1SNA103189R2600		10	1.00
		1.5 mm	0.059 in	Grey	SCFD	1SNA114117R0700		10	10.00
5	**Test sockets**	DIA 2 mm	0.079 in		AL2	1SNA167319R0600		50	
6	**Test plugs**	DIA 2 mm	0.079 in	Black	FC2	1SNA007865R2600		100	
7	**Terminal block markers**	Blank card		White	RC65	1SNA232000R0000		1	3.60

Complete list of accessories is indicated in the terminal block datasheet.
Some accessories such as jumper bars may modify the terminal block's ratings: complete information in the accessories catalogue pages.

Technical data valid for copper conductors only.

1SNC161066S0201 - Rev. A

D4/6.LLP screw clamp terminal blocks
Installation - 6 mm 0.236 in spacing

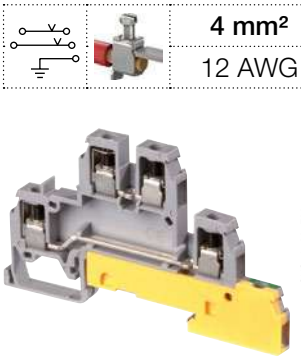

4 mm²
12 AWG

D4/6.LLP

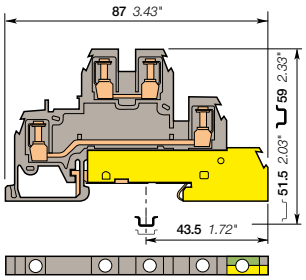

6 mm 0.236 in spacing

Description

- According to DIN 43880 standards (dimension above the rail 35 x 7.5 ≤ 44 mm),
- Compatible with busbar.

Ordering details

Description		Color	Type	Part Number		Pkg pce	Weight (1 pce) g
Installation	2 feed-through + ground	Grey, Green-yellow	D4/6.LLP	1SNA110441R2400		20	20.00

Main technical data

		IEC	UL	CSA
1 conductor per clamp	Rigid: Solid/Stranded	0.2-4 mm²	18-12 AWG	
	Flexible without ferrule	0.2-4 mm²		
	Flexible with insulated ferrule			
	Gauge	A4		
Rated current / Rated cross section		30 A / 4 mm²	20 A / 12 AWG	
Rated short-time withstand current (1s)		480 A		
Rated voltage		400 V	300 V	
Impulse withstand voltage		6000 V		
Protection		IP20	NEMA 1	

Mounting instructions

Rail	G32, TH 35-7.5, TH 35-15
Wire stripping length	9.5 mm 0.37 in
Tool	Flat screwdriver Ø 4 mm Ø 0.157 in
Torque	0.4 - 0.8 N.m 3.5 - 7 lb.in

The connecting capacity data for one Rigid: Solid/Stranded, or one Flexible conductor (when applicable) is a mandatory information required by IEC, UL and CSA standards (Copper conductors). All other data are provided as supplementary information only. For more details, please consult our CB, UL or CSA certificates and technical datasheet available on http://www.TE.com

CE RoHS USR CNR Gost R

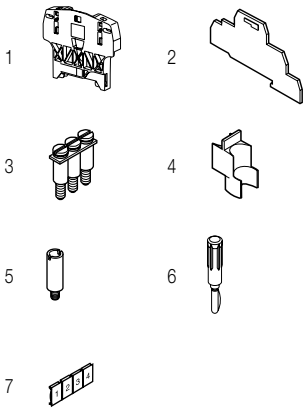

Accessories

	Description			Color	Type	Part Number		Pkg pce	Weight (1 pce) g
1	**End stops**	10 mm	0.394 in	Dark grey	BAZH1	1SNK900102R0000		20	24.00
2	**End sections**	1 mm	0.039 in	Grey	FED6	1SNA116964R1200		20	3.00
3	**Jumper bars**	2 poles	32 A		BJM62	1SNA173217R2600		10	2.00
		3 poles				1SNA173218R0700		10	3.00
		4 poles				1SNA173219R0000		10	4.00
		5 poles				1SNA173221R2200		10	5.00
		10 poles				1SNA173226R2700		10	10.00
4	**Circuit separators**	0 mm	0 in	White	SCD	1SNA103189R2600		10	1.00
		1.5 mm	0.059 in	Grey	SCFD	1SNA114117R0700		10	10.00
5	**Test sockets**	DIA 2 mm	0.079 in		AL2	1SNA167319R0600		50	
6	**Test plugs**	DIA 2 mm	0.079 in	Black	FC2	1SNA007865R2600		100	
7	**Terminal block markers**	Blank card		White	RC65	1SNA232000R0000		1	3.60

Complete list of accessories is indicated in the terminal block datasheet.
Some accessories such as jumper bars may modify the terminal block's ratings: complete information in the accessories catalogue pages.

Technical data valid for copper conductors only.

1SNC161070S0201 - Rev. A

D4/6.LL screw clamp terminal blocks
Installation - 6 mm 0.236 in spacing

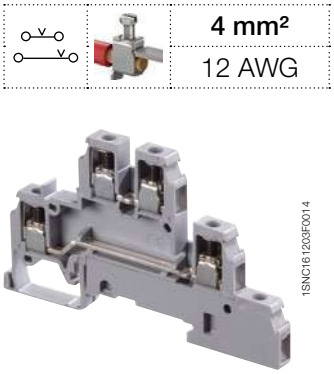

D4/6.LL

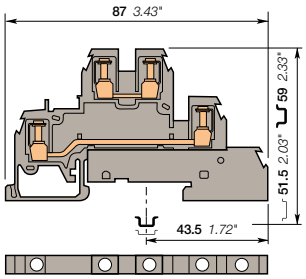

6 mm 0.236 in spacing

4 mm²
12 AWG

Description

- According to DIN 43880 standards (dimension above the rail 35 x 7.5 ≤ 44 mm),
- Compatible with busbar.

Ordering details

Description		Color	Type	Part Number		Pkg pce	Weight (1 pce) g
Installation	2 feed-through	Grey	D4/6.LL	1SNA110442R2500		20	20.00

Main technical data

		IEC	UL	CSA
1 conductor per clamp	Rigid: Solid/Stranded	0.2-4 mm²	18-12 AWG	
	Flexible without ferrule	0.2-4 mm²		
	Flexible with insulated ferrule			
	Gauge	A4		
Rated current / Rated cross section		30 A / 4 mm²	20 A / 12 AWG	
Rated short-time withstand current (1s)		480 A		
Rated voltage		400 V	300 V	
Impulse withstand voltage		6000 V		
Protection		IP20	NEMA 1	

Mounting instructions

Rail	G32, TH 35-7.5, TH 35-15
Wire stripping length	9.5 mm 0.37 in
Tool	Flat screwdriver Ø 4 mm Ø 0.157 in
Torque	0.4 - 0.8 N.m 3.5 - 7 lb.in

The connecting capacity data for one Rigid: Solid/Stranded, or one Flexible conductor (when applicable) is a mandatory information required by IEC, UL and CSA standards (Copper conductors). All other data are provided as supplementary information only. For more details, please consult our CB, UL or CSA certificates and technical datasheet available on http://www.TE.com

CE RoHS USR CNR Gost R

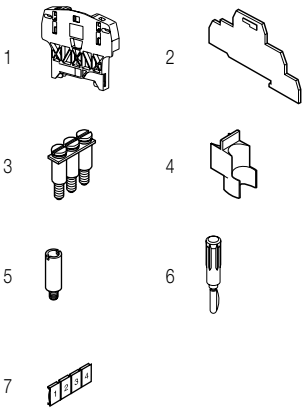

Accessories

	Description			Color	Type	Part Number		Pkg pce	Weight (1 pce) g
1	**End stops**	10 mm	0.394 in	Dark grey	BAZH1	1SNK900102R0000		20	24.00
2	**End sections**	1 mm	0.039 in	Grey	FED6	1SNA116964R1200		20	3.00
3	**Jumper bars**	2 poles	32 A		BJM62	1SNA173217R2600		10	2.00
		3 poles				1SNA173218R0700		10	3.00
		4 poles				1SNA173219R0000		10	4.00
		5 poles				1SNA173221R2200		10	5.00
		10 poles				1SNA173226R2700		10	10.00
4	**Circuit separators**	0 mm	0 in	White	SCD	1SNA103189R2600		10	1.00
		1.5 mm	0.059 in	Grey	SCFD	1SNA114117R0700		10	10.00
5	**Test sockets**	DIA 2 mm	0.079 in		AL2	1SNA167319R0600		50	
6	**Test plugs**	DIA 2 mm	0.079 in	Black	FC2	1SNA007865R2600		100	
7	**Terminal block markers**	Blank card		White	RC65	1SNA232000R0000		1	3.60

Complete list of accessories is indicated in the terminal block datasheet.
Some accessories such as jumper bars may modify the terminal block's ratings: complete information in the accessories catalogue pages.

Technical data valid for copper conductors only.

D4/6.LNTP screw clamp terminal blocks
Installation - 17.8 mm 0.701 in spacing

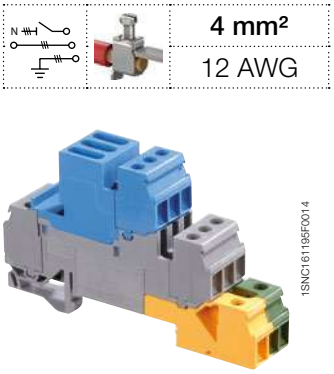

D4/6.LNTP

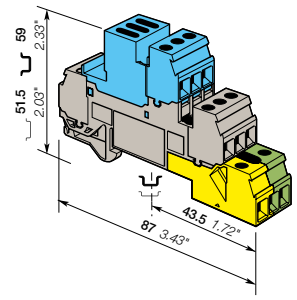

17.8 mm 0.701 in spacing

4 mm²
12 AWG

Description

- Closed terminal block: no end section needed,
- According to DIN 43880 standards (dimension above the rail 35 x 7.5 ≤ 44 mm),
- Compatible with busbar.

Ordering details

Description		Color	Type	Part Number		Pkg pce	Weight (1 pce) g
Installation	3 disconnect neutral + 3 feed-through + 3 ground	Blue, grey, green-yellow	D4/6.LNTP1	1SNA110264R0200		10	70.00

Main technical data

		IEC	UL	CSA
1 conductor per clamp	Rigid: Solid/Stranded	0.2-4 mm²	18-12 AWG	18-12 AWG
	Flexible without ferrule	0.2-4 mm²		
	Flexible with insulated ferrule			
	Gauge	A4		
Rated current / Rated cross section		30 A / 4 mm²	20 A / 12 AWG	20 A / 12 AWG
Rated short-time withstand current (1s)		480 A		
Rated voltage		320 V	300 V	300 V
Impulse withstand voltage		4000 V		
Protection		IP20	NEMA 1	

Mounting instructions

Rail	TH 35-7.5, TH 35-15
Wire stripping length	9.5 mm 0.37 in
Screw clamp Tool	Flat screwdriver Ø 4 mm Ø 0.157 in
Torque	0.5 - 0.8 N.m 4.4 - 7.1 lb.in
Disconnect device Tool	Flat screwdriver Ø 4 mm Ø 0.157 in
Torque	0.4 - 0.6 N.m 3.5 - 5.3 lb.in

The connecting capacity data for one Rigid: Solid/Stranded, or one Flexible conductor (when applicable) is a mandatory information required by IEC, UL and CSA standards (Copper conductors). All other data are provided as supplementary information only. For more details, please consult our CB, UL or CSA certificates and technical datasheet available on http://www.TE.com

CE RoHS USR CSA Gost R

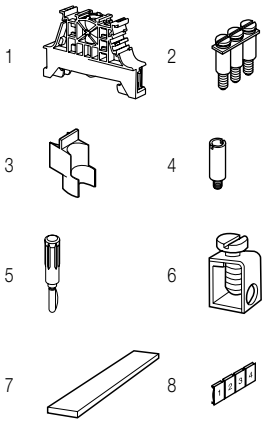

Accessories

	Description			Color	Type	Part Number		Pkg pce	Weight (1 pce) g
1	**End stops**	10 mm	0.394 in	Dark grey	BAM4	1SNK900001R0000		50	14.00
		5.2 mm	0.205 in		BAZ1	1SNK900002R0000		50	5.30
2	**Jumper bars**	2 poles	32 A		BJM62	1SNA173217R2600		10	2.00
		3 poles				1SNA173218R0700		10	3.00
		4 poles				1SNA173219R0000		10	4.00
		5 poles				1SNA173221R2200		10	5.00
		10 poles				1SNA173226R2700		10	10.00
3	**Circuit separators**	0 mm	0 in	White	SCD	1SNA103189R2600		10	1.00
		1.5 mm	0.059 in	Grey	SCFD	1SNA114117R0700		10	10.00
4	**Test sockets**	DIA 2 mm	0.079 in		AL2	1SNA167319R0600		50	
5	**Test plugs**	DIA 2 mm	0.079 in	Black	FC2	1SNA007865R2600		100	
6	**Clamps**	0.5-35 mm²			SFB1	1SNA163860R0500		50	12.00
		16-35 mm²	6-2 AWG		SFB2	1SNA168956R0600		50	11.00
7	**Busbars**	Busbars			BO3	1SNA164406R2400		1	
8	**Terminal block markers**	Blank card		White	RC65	1SNA232000R0000		1	3.60

Complete list of accessories is indicated in the terminal block datasheet.
Some accessories such as jumper bars may modify the terminal block's ratings: complete information in the accessories catalogue pages.

Technical data valid for copper conductors only.

1SNC161072S0201 - Rev. A

D4/6.LNTP screw clamp terminal blocks
Installation - 17.8 mm 0.701 in spacing

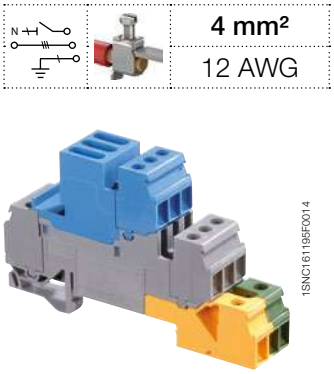

D4/6.LNTP

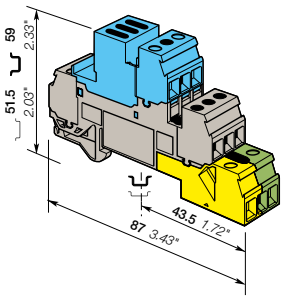

17.8 mm 0.701 in spacing

4 mm²	
12 AWG	

Description

- Closed terminal block: no end section needed,
- According to DIN 43880 standards (dimension above the rail 35 x 7.5 ≤ 44 mm),
- Compatible with busbar.

Ordering details

Description		Color	Type	Part Number		Pkg pce	Weight (1 pce) g
Installation	1 disconnect neutral + 3 feed-through + 1 ground	Blue, grey, green-yellow	D4/6.LNTP3	1SNA110269R1700		10	70.00

Main technical data

		IEC	UL	CSA
1 conductor per clamp	Rigid: Solid/Stranded	0.2-4 mm²	18-12 AWG	18-12 AWG
	Flexible without ferrule	0.2-4 mm²		
	Flexible with insulated ferrule			
	Gauge	A4		
Rated current / Rated cross section		30 A / 4 mm²	20 A / 12 AWG	20 A / 12 AWG
Rated short-time withstand current (1s)		480 A		
Rated voltage		320 V	300 V	300 V
Impulse withstand voltage		4000 V		
Protection		IP20	NEMA 1	

Mounting instructions

Rail	TH 35-7.5, TH 35-15
Wire stripping length	9.5 mm 0.37 in
Screw clamp Tool	Flat screwdriver Ø 4 mm Ø 0.157 in
Torque	0.5 - 0.8 N.m 4.4 - 7.1 lb.in
Disconnect device Tool	Flat screwdriver Ø 4 mm Ø 0.157 in
Torque	0.4 - 0.6 N.m 3.5 - 5.3 lb.in

The connecting capacity data for one Rigid: Solid/Stranded, or one Flexible conductor (when applicable) is a mandatory information required by IEC, UL and CSA standards (Copper conductors). All other data are provided as supplementary information only. For more details, please consult our CB, UL or CSA certificates and technical datasheet available on http://www.TE.com

CE RoHS USR CSA Gost R

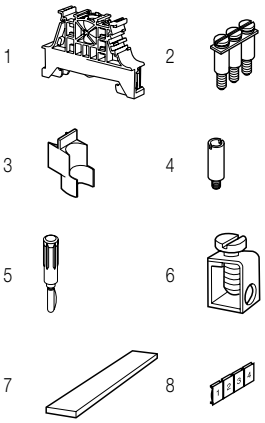

Accessories

	Description			Color	Type	Part Number		Pkg pce	Weight (1 pce) g
1	**End stops**	10 mm	0.394 in	Dark grey	BAM4	1SNK900001R0000		50	14.00
		5.2 mm	0.205 in		BAZ1	1SNK900002R0000		50	5.30
2	**Jumper bars**	2 poles	32 A		BJM62	1SNA173217R2600		10	2.00
		3 poles				1SNA173218R0700		10	3.00
		4 poles				1SNA173219R0000		10	4.00
		5 poles				1SNA173221R2200		10	5.00
		10 poles				1SNA173226R2700		10	10.00
3	**Circuit separators**	0 mm	0 in	White	SCD	1SNA103189R2600		10	1.00
		1.5 mm	0.059 in	Grey	SCFD	1SNA114117R0700		10	10.00
4	**Test sockets**	DIA 2 mm	0.079 in		AL2	1SNA167319R0600		50	
5	**Test plugs**	DIA 2 mm	0.079 in	Black	FC2	1SNA007865R2600		100	
6	**Clamps**	0.5-35 mm²			SFB1	1SNA163860R0500		50	12.00
		16-35 mm²	6-2 AWG		SFB2	1SNA168956R0600		50	11.00
7	**Busbars**	Busbars			BO3	1SNA164406R2400		1	
8	**Terminal block markers**	Blank card		White	RC65	1SNA232000R0000		1	3.60

Complete list of accessories is indicated in the terminal block datasheet.
Some accessories such as jumper bars may modify the terminal block's ratings: complete information in the accessories catalogue pages.

Technical data valid for copper conductors only.

D4/6.LNTP screw clamp terminal blocks
Installation - 17.8 mm 0.701 in spacing

4 mm²
12 AWG

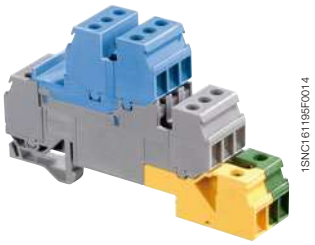

D4/6.LNTP

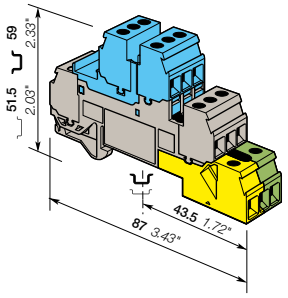

17.8 mm 0.701 in spacing

Description

- Closed terminal block: no end section needed,
- According to DIN 43880 standards (dimension above the rail 35 x 7.5 ≤ 44 mm),
- Compatible with busbar.

Ordering details

Description		Color	Type	Part Number		Pkg pce	Weight (1 pce) g
Installation	3 neutral + 3 feed-through + 3 ground	Blue, grey, Green-yellow	D4/6.LNTP2	1SNA110327R2100		10	70.00

Main technical data

		IEC	UL	CSA
1 conductor per clamp	Rigid: Solid/Stranded	0.2-4 mm²	18-12 AWG	18-12 AWG
	Flexible without ferrule	0.2-4 mm²		
	Flexible with insulated ferrule			
	Gauge	A4		
Rated current / Rated cross section		30 A / 4 mm²	20 A / 12 AWG	20 A / 12 AWG
Rated short-time withstand current (1s)		480 A		
Rated voltage		400 V	300 V	300 V
Impulse withstand voltage		6000 V		
Protection		IP20	NEMA 1	

Mounting instructions

Rail	TH 35-7.5, TH 35-15
Wire stripping length	9.5 mm 0.37 in
Tool	Flat screwdriver Ø 4 mm Ø 0.157 in
Torque	0.5 - 0.8 N.m 4.4 - 7.1 lb.in

The connecting capacity data for one Rigid: Solid/Stranded, or one Flexible conductor (when applicable) is a mandatory information required by IEC, UL and CSA standards (Copper conductors). All other data are provided as supplementary information only. For more details, please consult our CB, UL or CSA certificates and technical datasheet available on http://www.TE.com

CE RoHS USR CSA Gost R

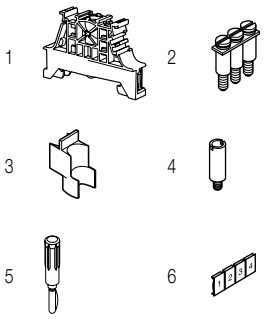

Accessories

	Description			Color	Type	Part Number		Pkg pce	Weight (1 pce) g
1	**End stops**	10 mm	0.394 in	Dark grey	BAM4	1SNK900001R0000		50	14.00
		5.2 mm	0.205 in		BAZ1	1SNK900002R0000		50	5.30
2	**Jumper bars**	2 poles	32 A		BJM62	1SNA173217R2600		10	2.00
		3 poles				1SNA173218R0700		10	3.00
		4 poles				1SNA173219R0000		10	4.00
		5 poles				1SNA173221R2200		10	5.00
		10 poles				1SNA173226R2700		10	10.00
3	**Circuit separators**	0 mm	0 in	White	SCD	1SNA103189R2600		10	1.00
		1.5 mm	0.059 in	Grey	SCFD	1SNA114117R0700		10	10.00
4	**Test sockets**	DIA 2 mm	0.079 in		AL2	1SNA167319R0600		50	
5	**Test plugs**	DIA 2 mm	0.079 in	Black	FC2	1SNA007865R2600		100	
6	**Terminal block markers**	Blank card		White	RC65	1SNA232000R0000		1	3.60

Complete list of accessories is indicated in the terminal block datasheet.
Some accessories such as jumper bars may modify the terminal block's ratings: complete information in the accessories catalogue pages.

Technical data valid for copper conductors only.

1SNC161074S0201 - Rev. A

D4/6.LNTP screw clamp terminal blocks
Installation - 17.8 mm 0.701 in spacing

4 mm²
12 AWG

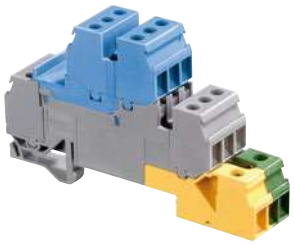

D4/6.LNTP

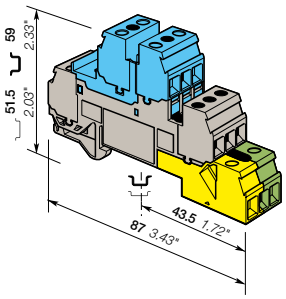

17.8 mm 0.701 in spacing

Description

- Closed terminal block: no end section needed.
- According to DIN 43880 standards (dimension above the rail 35 x 7.5 ≤ 44 mm),
- Compatible with busbar.

Ordering details

Description		Color	Type	Part Number		Pkg pce	Weight (1 pce) g
Installation	1 neutral + 3 feed-through + 1 ground	Blue, Grey, Green-Yellow	D4/6.LNTP8	1SNA110333R2700		10	60.00

Main technical data

		IEC	UL	CSA
1 conductor per clamp	Rigid: Solid/Stranded	0.2-4 mm²	18-12 AWG	18-12 AWG
	Flexible without ferrule	0.2-4 mm²		
	Flexible with insulated ferrule			
	Gauge	A4		
Rated current / Rated cross section		30 A / 4 mm²	20 A / 12 AWG	20 A / 12 AWG
Rated short-time withstand current (1s)		480 A		
Rated voltage		400 V	300 V	300 V
Impulse withstand voltage		6000 V		
Protection		IP20	NEMA 1	

Mounting instructions

Rail	TH 35-7.5, TH 35-15
Wire stripping length	9.5 mm 0.37 in
Tool	Flat screwdriver Ø 4 mm Ø 0.157 in
Torque	0.4 - 0.8 N.m 3.5 - 7 lb.in

The connecting capacity data for one Rigid: Solid/Stranded, or one Flexible conductor (when applicable) is a mandatory information required by IEC, UL and CSA standards (Copper conductors). All other data are provided as supplementary information only. For more details, please consult our CB, UL or CSA certificates and technical datasheet available on http://www.TE.com

CE RoHS USR CNR CSA Gost R

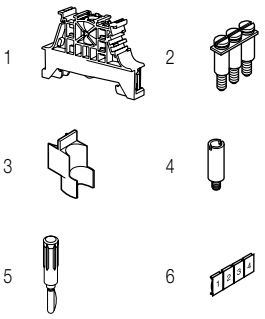

Accessories

	Description			Color	Type	Part Number		Pkg pce	Weight (1 pce) g
1	**End stops**	10 mm	0.394 in	Dark grey	BAM4	1SNK900001R0000		50	14.00
		5.2 mm	0.205 in		BAZ1	1SNK900002R0000		50	5.30
2	**Jumper bars**	2 poles	32 A	Grey	BJM62	1SNA173217R2600		10	2.00
		3 poles				1SNA173218R0700		10	3.00
		4 poles				1SNA173219R0000		10	4.00
		5 poles				1SNA173221R2200		10	5.00
		10 poles				1SNA173226R2700		10	10.00
3	**Circuit separators**	0 mm	0 in	White	SCD	1SNA103189R2600		10	1.00
		1.5 mm	0.059 in	Grey	SCFD	1SNA114117R0700		10	10.00
4	**Test sockets**	DIA 2 mm	0.079 in		AL2	1SNA167319R0600		50	
5	**Test plugs**	DIA 2 mm	0.079 in	Black	FC2	1SNA007865R2600		100	
6	**Terminal block markers**	Blank card		White	RC65	1SNA232000R0000		1	3.60

Complete list of accessories is indicated in the terminal block datasheet.
Some accessories such as jumper bars may modify the terminal block's ratings: complete information in the accessories catalogue pages.

Technical data valid for copper conductors only.

D4/6.LNTP screw clamp terminal blocks
Installation - 17.8 mm 0.701 in spacing

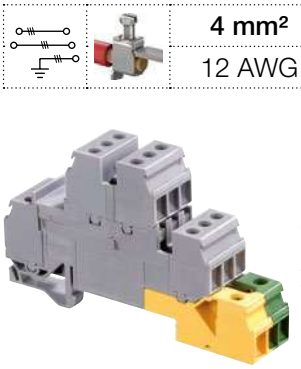

D4/6.LNTP

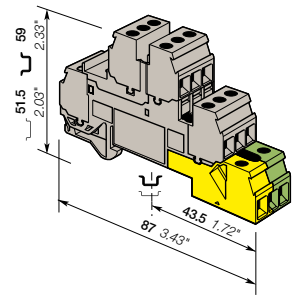

17.8 mm 0.701 in spacing

	4 mm²
	12 AWG

Description

- Closed terminal block: no end section needed,
- According to DIN 43880 standards (dimension above the rail 35 x 7.5 ≤ 44 mm),
- Compatible with busbar.

Ordering details

Description		Color	Type	Part Number		Pkg pce	Weight (1 pce) g
Installation	6 feed-through + 3 ground	Grey, Green-yellow	D4/6.LNTP4	1SNA110328R0200		10	70.00

Main technical data

		IEC	UL	CSA
1 conductor per clamp	Rigid: Solid/Stranded	0.2-4 mm²	18-12 AWG	18-12 AWG
	Flexible without ferrule	0.2-4 mm²		
	Flexible with insulated ferrule			
	Gauge	A4		
Rated current / Rated cross section		30 A / 4 mm²	20 A / 12 AWG	20 A / 12 AWG
Rated short-time withstand current (1s)		480 A		
Rated voltage		400 V	300 V	300 V
Impulse withstand voltage		6000 V		
Protection		IP20	NEMA 1	

Mounting instructions

Rail	TH 35-7.5, TH 35-15
Wire stripping length	9.5 mm 0.37 in
Tool	Flat screwdriver Ø 4 mm Ø 0.157 in
Torque	0.5 - 0.8 N.m 4.4 - 7.1 lb.in

The connecting capacity data for one Rigid: Solid/Stranded, or one Flexible conductor (when applicable) is a mandatory information required by IEC, UL and CSA standards (Copper conductors). All other data are provided as supplementary information only. For more details, please consult our CB, UL or CSA certificates and technical datasheet available on http://www.TE.com

CE RoHS USR CSA Gost R

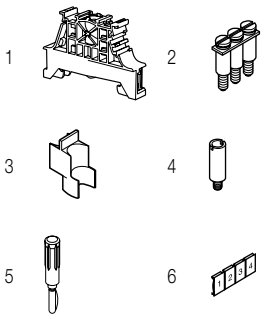

Accessories

	Description			Color	Type	Part Number		Pkg pce	Weight (1 pce) g
1	**End stops**	10 mm	0.394 in	Dark grey	BAM4	1SNK900001R0000		50	14.00
		5.2 mm	0.205 in		BAZ1	1SNK900002R0000		50	5.30
2	**Jumper bars**	2 poles	32 A		BJM62	1SNA173217R2600		10	2.00
		3 poles				1SNA173218R0700		10	3.00
		4 poles				1SNA173219R0000		10	4.00
		5 poles				1SNA173221R2200		10	5.00
		10 poles				1SNA173226R2700		10	10.00
3	**Circuit separators**	0 mm	0 in	White	SCD	1SNA103189R2600		10	1.00
		1.5 mm	0.059 in	Grey	SCFD	1SNA114117R0700		10	10.00
4	**Test sockets**	DIA 2 mm	0.079 in		AL2	1SNA167319R0600		50	
5	**Test plugs**	DIA 2 mm	0.079 in	Black	FC2	1SNA007865R2600		100	
6	**Terminal block markers**	Blank card		White	RC65	1SNA232000R0000		1	3.60

Complete list of accessories is indicated in the terminal block datasheet.
Some accessories such as jumper bars may modify the terminal block's ratings: complete information in the accessories catalogue pages.

Technical data valid for copper conductors only.

1SNC161080S0201 - Rev. A

D4/6.LNTP screw clamp terminal blocks
Installation - 17.8 mm 0.701 in spacing

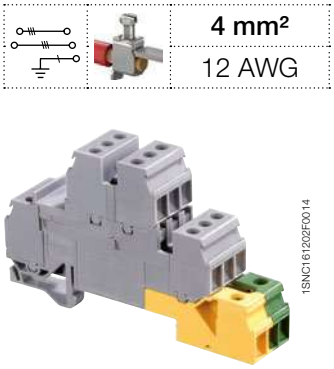

D4/6.LNTP

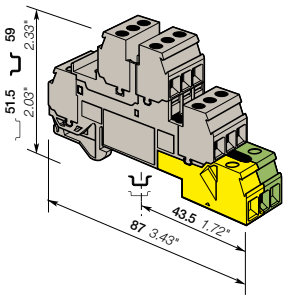

17.8 mm 0.701 in spacing

4 mm²
12 AWG

Description

- Closed terminal block: no end section needed,
- According to DIN 43880 standards (dimension above the rail 35 x 7.5 ≤ 44 mm),
- Compatible with busbar.

Ordering details

Description		Color	Type	Part Number		Pkg pce	Weight (1 pce) g
Installation	6 feed-through + 1 ground	Grey, Green-yellow	D4/6.LNTP7	1SNA110332R2600		10	60.00

Main technical data

		IEC	UL	CSA
1 conductor per clamp	Rigid: Solid/Stranded	0.2-4 mm²	18-12 AWG	18-12 AWG
	Flexible without ferrule	0.2-4 mm²		
	Flexible with insulated ferrule			
	Gauge	A4		
Rated current / Rated cross section		30 A / 4 mm²	20 A / 12 AWG	20 A / 12 AWG
Rated short-time withstand current (1s)		480 A		
Rated voltage		400 V	300 V	300 V
Impulse withstand voltage		6000 V		
Protection		IP20	NEMA 1	

Mounting instructions

Rail	TH 35-7.5, TH 35-15
Wire stripping length	9.5 mm 0.37 in
Tool	Flat screwdriver Ø 4 mm Ø 0.157 in
Torque	0.4 - 0.8 N.m 3.5 - 7 lb.in

The connecting capacity data for one Rigid: Solid/Stranded, or one Flexible conductor (when applicable) is a mandatory information required by IEC, UL and CSA standards (Copper conductors). All other data are provided as supplementary information only. For more details, please consult our CB, UL or CSA certificates and technical datasheet available on http://www.TE.com

CE RoHS USR CNR CSA Gost R

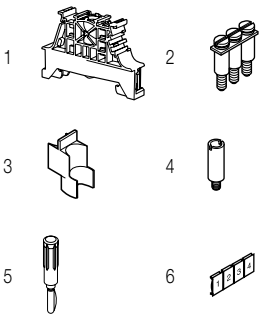

Accessories

	Description			Color	Type	Part Number		Pkg pce	Weight (1 pce) g
1	**End stops**	10 mm	0.394 in	Dark grey	BAM4	1SNK900001R0000		50	14.00
		5.2 mm	0.205 in		BAZ1	1SNK900002R0000		50	5.30
2	**Jumper bars**	2 poles	32 A		BJM62	1SNA173217R2600		10	2.00
		3 poles				1SNA173218R0700		10	3.00
		4 poles				1SNA173219R0000		10	4.00
		5 poles				1SNA173221R2200		10	5.00
		10 poles				1SNA173226R2700		10	10.00
3	**Circuit separators**	0 mm	0 in	White	SCD	1SNA103189R2600		10	1.00
		1.5 mm	0.059 in	Grey	SCFD	1SNA114117R0700		10	10.00
4	**Test sockets**	DIA 2 mm	0.079 in		AL2	1SNA167319R0600		50	
5	**Test plugs**	DIA 2 mm	0.079 in	Black	FC2	1SNA007865R2600		100	
6	**Terminal block markers**	Blank card		White	RC65	1SNA232000R0000		1	3.60

Complete list of accessories is indicated in the terminal block datasheet.
Some accessories such as jumper bars may modify the terminal block's ratings: complete information in the accessories catalogue pages.

Technical data valid for copper conductors only.

1SNC161082S0201 - Rev. A

D4/6.LNTP screw clamp terminal blocks
Installation - 17.8 mm 0.701 in spacing

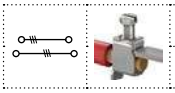

4 mm²
12 AWG

D4/6.LNTP

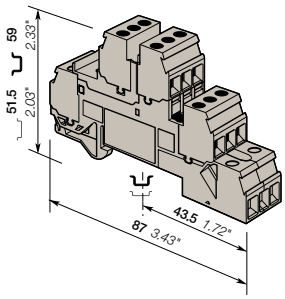

17.8 mm 0.701 in spacing

Description
- Closed terminal block: no end section needed,
- According to DIN 43880 standards (dimension above the rail 35 x 7.5 ≤ 44 mm),
- Compatible with busbar.

Ordering details

Description		Color	Type	Part Number		Pkg pce	Weight (1 pce) g
Installation	6 feed-through	Grey	D4/6.LNTP6	1SNA110331R2500		10	63.10

Main technical data

		IEC	UL	CSA
1 conductor per clamp	Rigid: Solid/Stranded	0.2-4 mm²	18-12 AWG	18-12 AWG
	Flexible without ferrule	0.2-4 mm²		
	Flexible with insulated ferrule			
	Gauge	A4		
Rated current / Rated cross section		30 A / 4 mm²	20 A / 12 AWG	20 A / 12 AWG
Rated short-time withstand current (1s)		480 A		
Rated voltage		400 V	300 V	300 V
Impulse withstand voltage		6000 V		
Protection		IP20	NEMA 1	

The connecting capacity data for one Rigid: Solid/Stranded, or one Flexible conductor (when apply) is a mandatory information required by IEC, UL and CSA standards (Copper conductors). All other data are provided as supplementary information only. For more details, please consult our CB, UL or CSA certificates and technical datasheet available on http://www.TE.com

CE RoHS USR CNR CSA Gost R

Mounting instructions

Rail	TH 35-7.5, TH 35-15
Wire stripping length	9.5 mm 0.37 in
Tool	Flat screwdriver Ø 4 mm Ø 0.157 in
Torque	0.4 - 0.8 N.m 3.5 - 7 lb.in

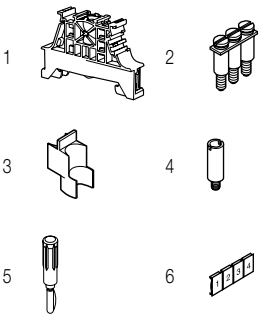

Accessories

	Description			Color	Type	Part Number		Pkg pce	Weight (1 pce) g
1	End stops	10 mm	0.394 in	Dark grey	BAM4	1SNK900001R0000		50	14.00
		5.2 mm	0.205 in		BAZ1	1SNK900002R0000		50	5.30
2	Jumper bars	2 poles	32 A		BJM62	1SNA173217R2600		10	2.00
		3 poles				1SNA173218R0700		10	3.00
		4 poles				1SNA173219R0000		10	4.00
		5 poles				1SNA173221R2200		10	5.00
		10 poles				1SNA173226R2700		10	10.00
3	Circuit separators	0 mm	0 in	White	SCD	1SNA103189R2600		10	1.00
		1.5 mm	0.059 in	Grey	SCFD	1SNA114117R0700		10	10.00
4	Test sockets	DIA 2 mm	0.079 in		AL2	1SNA167319R0600		50	
5	Test plugs	DIA 2 mm	0.079 in	Black	FC2	1SNA007865R2600		100	
6	Terminal block markers	Blank card		White	RC65	1SNA232000R0000		1	3.60

Complete list of accessories is indicated in the terminal block datasheet.
Some accessories such as jumper bars may modify the terminal block's ratings: complete information in the accessories catalogue pages.

Technical data valid for copper conductors only.

1SNC161083S0201 - Rev. A

D4/6.A.NTLP screw clamp terminal blocks
Installation - 6 mm 0.236 in spacing

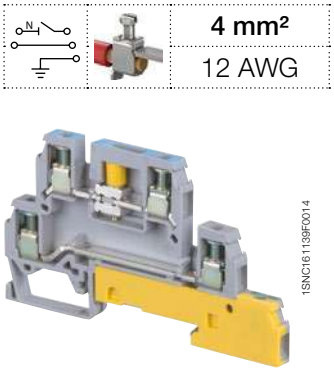

D4/6.A.NTLP

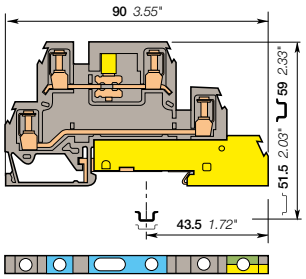

6 mm 0.236 in spacing

4 mm²
12 AWG

Description

According to DIN 43880 standards (dimension above the rail 35 x 7.5 ≤ 44 mm).

Ordering details

Description		Color	Type	Part Number		Pkg pce	Weight (1 pce) g
Installation	Disconnect neutral + feed-through + ground	Grey, blue, Green-yellow	D4/6.A.NTLP	1SNA110415R1200		10	

Main technical data

		IEC	UL	CSA
1 conductor per clamp	Rigid: Solid/Stranded	0.2-4 mm²	18-12 AWG	
	Flexible without ferrule	0.2-4 mm²		
	Flexible with insulated ferrule			
	Gauge	A4		
Rated current / Rated cross section		30 A / 4 mm²	20 A / 12 AWG	
Rated short-time withstand current (1s)		480 A		
Rated voltage		320 V	300 V	
Impulse withstand voltage		4000 V		
Protection		IP20	NEMA 1	

Mounting instructions

Rail		G32, TH 35-7.5, TH 35-15
Wire stripping length		9.5 mm 0.37 in
Screw clamp Tool		Flat screwdriver Ø 4 mm Ø 0.157 in
Torque		0.4 - 0.8 Nm 3.5 - 7 lb.in
Disconnect device Tool		Flat screwdriver Ø 4 mm Ø 0.157 in
Torque		0.4 - 0.6 N.m 3.5 - 5.3 lb.in

The connecting capacity data for one Rigid: Solid/Stranded, or one Flexible conductor (when applicable) is a mandatory information required by IEC, UL and CSA standards (Copper conductors). All other data are provided as supplementary information only. For more details, please consult our CB, UL or CSA certificates and technical datasheet available on http://www.TE.com

CE RoHS USR CNR Gost R

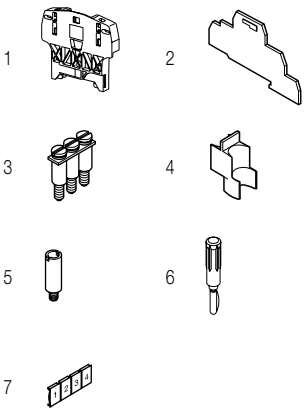

Accessories

	Description			Color	Type	Part Number		Pkg pce	Weight (1 pce) g
1	End stops	10 mm	0.394 in	Dark grey	BAZH1	1SNK900102R0000		20	24.00
2	End sections	1 mm	0.039 in	Grey	FEDA6	1SNA116965R1300		20	3.00
3	Jumper bars	2 poles	32 A		BJM62	1SNA173217R2600		10	2.00
		3 poles				1SNA173218R0700		10	3.00
		4 poles				1SNA173219R0000		10	4.00
		5 poles				1SNA173221R2200		10	5.00
		10 poles				1SNA173226R2700		10	10.00
4	Circuit separators	0 mm	0 in	White	SCD	1SNA103189R2600		10	1.00
		1.5 mm	0.059 in	Grey	SCFD	1SNA114117R0700		10	10.00
5	Test sockets	DIA 2 mm	0.079 in		AL2	1SNA167319R0600		50	
6	Test plugs	DIA 2 mm	0.079 in	Black	FC2	1SNA007865R2600		100	
7	Terminal block markers	Blank card		White	RC65	1SNA232000R0000		1	3.60

Complete list of accessories is indicated in the terminal block datasheet.
Some accessories such as jumper bars may modify the terminal block's ratings: complete information in the accessories catalogue pages.

Technical data valid for copper conductors only.

D4/6.A.LL screw clamp terminal blocks
Installation - 6 mm 0.236 in spacing

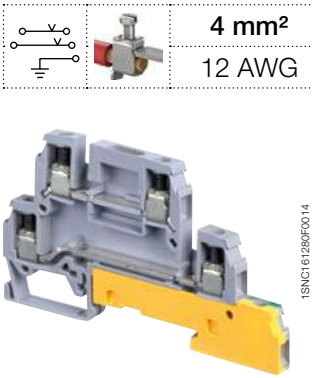

D4/6.A.LL

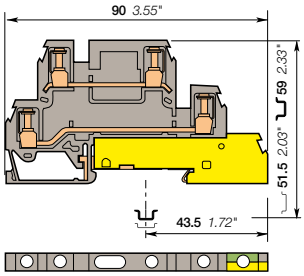

6 mm 0.236 in spacing

	4 mm²
	12 AWG

Description

According to DIN 43880 standards (dimension above the rail 35 x 7.5 ≤ 44 mm).

Ordering details

Description		Color	Type	Part Number		Pkg pce	Weight (1 pce) g
Installation	2 feed-through + ground	Grey, Green-yellow	D4/6.A.LLP	1SNA110418R2500		20	20.00

Main technical data

		IEC	UL	CSA
1 conductor per clamp	Rigid: Solid/Stranded	0.2-4 mm²	18-12 AWG	
	Flexible without ferrule	0.2-4 mm²		
	Flexible with insulated ferrule			
	Gauge	A4		
Rated current / Rated cross section		30 A / 4 mm²	20 A / 12 AWG	
Rated short-time withstand current (1s)		480 A		
Rated voltage		400 V	300 V	
Impulse withstand voltage		6000 V		
Protection		IP20	NEMA 1	

Mounting instructions

Rail		G32, TH 35-7.5, TH 35-15
Wire stripping length		9.5 mm 0.37 in
Screw clamp Tool		Flat screwdriver Ø 4 mm Ø 0.157 in
Torque		0.4 - 0.8 Nm 3.5 - 7 lb.in
Disconnect device Tool		
Torque		

The connecting capacity data for one Rigid: Solid/Stranded, or one Flexible conductor (when applicable) is a mandatory information required by IEC, UL and CSA standards (Copper conductors). All other data are provided as supplementary information only. For more details, please consult our CB, UL or CSA certificates and technical datasheet available on http://www.TE.com

CE RoHS USR CNR Gost R

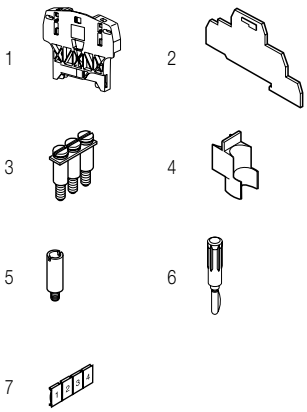

Accessories

	Description			Color	Type	Part Number		Pkg pce	Weight (1 pce) g
1	End stops	10 mm	0.394 in	Dark grey	BAZH1	1SNK900102R0000		20	24.00
2	End sections	1 mm	0.039 in	Grey	FEDA6	1SNA116965R1300		20	3.60
3	Jumper bars	2 poles	32 A		BJM62	1SNA173217R2600		10	2.00
		3 poles				1SNA173218R0700		10	3.00
		4 poles				1SNA173219R0000		10	4.00
		5 poles				1SNA173221R2200		10	5.00
		10 poles				1SNA173226R2700		10	10.00
4	Circuit separators	0 mm	0 in	White	SCD	1SNA103189R2600		10	1.00
		1.5 mm	0.059 in	Grey	SCFD	1SNA114117R0700		10	10.00
5	Test sockets	DIA 2 mm	0.079 in		AL2	1SNA167319R0600		50	
6	Test plugs	DIA 2 mm	0.079 in	Black	FC2	1SNA007865R2600		100	
7	Terminal block markers	Blank card		White	RC65	1SNA232000R0000		1	3.60

Complete list of accessories is indicated in the terminal block datasheet.
Some accessories such as jumper bars may modify the terminal block's ratings: complete information in the accessories catalogue pages.

Technical data valid for copper conductors only.

1SNC161129S0201 - Rev. A

MA2.5/5.NT screw clamp terminal blocks

Neutral disconnect - 5 mm 0.197 in spacing

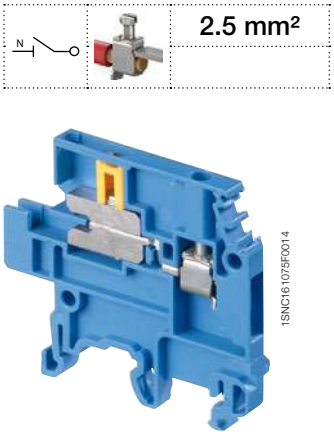

MA2.5/5.NT

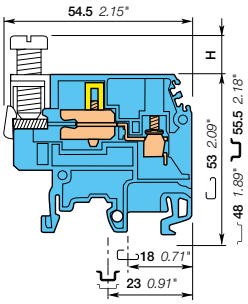

5 mm 0.197 in spacing

Description

- Ease the disconnection of your neutral circuits,
- Compatible with screw clamp terminal blocks, wire size 2.5 mm² (5 mm 0.200 in spacing) to 16 mm² (12 mm 0.473 in spacing).

Ordering details

Description		Color	Type	Part Number		Pkg pce	Weight (1 pce) g
Neutral disconnect	For busbar 10 x 3 mm	Blue	MA2.5/5.NT	1SNA125487R0600		50	12.00

Main technical data

		IEC	UL	CSA
1 conductor per clamp	Rigid: Solid/Stranded	0.2-4 mm²		
	Flexible without ferrule	0.22-2.5 mm²		
	Flexible with insulated ferrule			
	Gauge	A3		
Rated current / Rated cross section		24 A / 2.5 mm²		
Rated short-time withstand current (1s)		300 A		
Rated voltage		400 V		
Impulse withstand voltage		6000 V		
Protection			NEMA	

Mounting instructions

Rail		G32, TH 35-7.5, TH 35-15
Wire stripping length		10 mm 0.39 in
Screw clamp Tool		Flat screwdriver Ø 3.5 mm Ø 0.14 in
Torque		0.4 - 0.6 N.m 3.5 - 5.3 lb.in
Disconnect device Tool		Flat screwdriver Ø 4 mm Ø 0.16 in
Torque		0.4 - 0.6 N.m 3.5 - 5.3 lb.in

The connecting capacity data for one Rigid: Solid/Stranded, or one Flexible conductor (when applicable) is a mandatory information required by IEC, UL and CSA standards (Copper conductors). All other data are provided as supplementary information only. for more details, please consult our CB, UL or CSA certificates and technical datasheet available on http://www.TE.com

CE RoHS Gost R

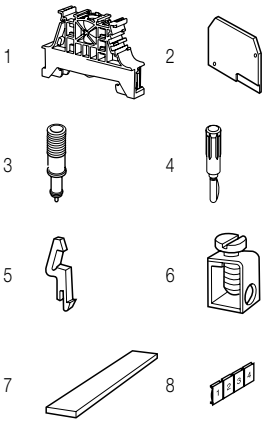

Accessories

	Description			Color	Type	Part Number		Pkg pce	Weight (1 pce) g
1	End stops	10 mm	0.394 in	Dark grey	BAM4	1SNK900001R0000		50	14.00
		5.2 mm	0.205 in		BAZ1	1SNK900002R0000		50	5.30
2	End sections	2.8 mm	0.110 in	Grey	FEM6	1SNA118368R1600		20	2.40
3	Test adapters			Green	DCV	1SNA173058R0200		10	2.20
4	Test plugs	DIA 2 mm 0.079 in		Black	FC2	1SNA007865R2600		100	
5	Locking devices	For busbar BO3		Blue	VRB3	1SNA128035R1600		10	
6	Clamps	0.5-35 mm² 18-2 AWG			SFB1	1SNA163860R0500		50	12.00
		16-35 mm² 6-2 AWG			SFB2	1SNA168956R0600		50	11.00
7	Busbars	Busbars			BO3	1SNA164406R2400		1	
8	Terminal block markers	Blank card		White	RC510	1SNA231000R0700		1	5.20

Complete list of accessories is indicated in the terminal block datasheet.
Some accessories such as jumper bars may modify the terminal block's ratings: complete information in the accessories catalogue pages.

Technical data valid for copper conductors only

M4/6.NT screw clamp terminal blocks

Neutral disconnect - 6 mm 0.236 in spacing

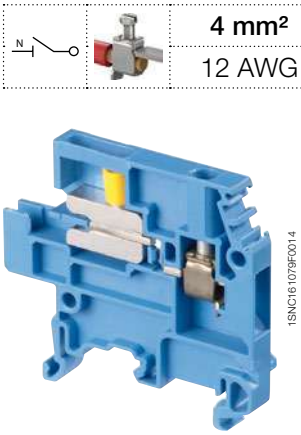

M4/6.NT

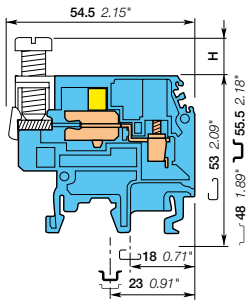

6 mm 0.236 in spacing

	4 mm²
	12 AWG

Description

- Ease the disconnection of your neutral circuits,
- Compatible with screw clamp terminal blocks, wire size 2.5 mm² (5 mm 0.200 in spacing) to 16 mm² (12 mm 0.473 in spacing).

Ordering details

Description		Color	Type	Part Number		Pkg pce	Weight (1 pce) g
Neutral disconnect	For busbar 10 x 3 mm	Blue	M4/6.NT	1SNA125117R0200		50	13.00

Main technical data

		IEC	UL	CSA
1 conductor per clamp	Rigid: Solid/Stranded	0.2-4 mm²		18-12 AWG
	Flexible without ferrule	0.22-4 mm²		
	Flexible with insulated ferrule			
	Gauge	A4		
Rated current / Rated cross section		32 A / 4 mm²		25 A / 12 AWG
Rated short-time withstand current (1s)		480 A		
Rated voltage		400 V		300 V
Impulse withstand voltage		6000 V		
Protection			NEMA	

Mounting instructions

Rail	G32, TH 35-7.5, TH 35-15
Wire stripping length	12 mm 0.47 in
Screw clamp Tool	Flat screwdriver Ø 4 mm Ø 0.157 in
Torque	0.5 - 0.8 N.m 4.4 - 7.1 lb.in
Disconnect device Tool	Flat screwdriver Ø 4 mm Ø 0.157 in
Torque	0.4 - 0.6 N.m 3.5 - 5.3 lb.in

The connecting capacity data for one Rigid: Solid/Stranded, or one Flexible conductor (when applicable) is a mandatory information required by IEC, UL and CSA standards (Copper conductors). All other data are provided as supplementary information only. For more details, please consult our CB, UL or CSA certificates and technical datasheet available on http://www.TE.com

CE RoHS CSA Gost R

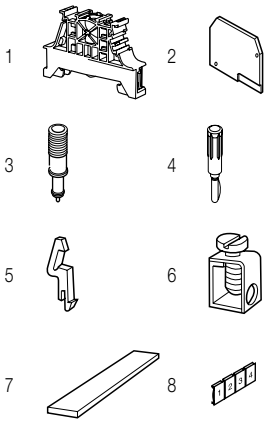

Accessories

	Description			Color	Type	Part Number		Pkg pce	Weight (1 pce) g
1	**End stops**	10 mm	0.394 in	Dark grey	BAM4	1SNK900001R0000		50	14.00
		5.2 mm	0.205 in		BAZ1	1SNK900002R0000		50	5.30
2	**End sections**	2.8 mm	0.110 in	Grey	FEM6	1SNA118368R1600		20	2.40
3	**Test adapters**			Green	DCV	1SNA173058R0200		10	2.20
4	**Test plugs**	DIA 2 mm 0.079 in		Black	FC2	1SNA007865R2600		100	
5	**Locking devices**	For busbar BO3		Blue	VRB3	1SNA128035R1600		10	
6	**Clamps**	0.5-35 mm² 18-2 AWG			SFB1	1SNA163860R0500		50	12.00
		16-35 mm² 6-2 AWG			SFB2	1SNA168956R0600		50	11.00
7	**Busbars**	Busbars			BO3	1SNA164406R2400		1	
8	**Terminal block markers**	Blank card		White	RC610	1SNA233000R0100		1	7.50

Complete list of accessories is indicated in the terminal block datasheet.
Some accessories such as jumper bars may modify the terminal block's ratings: complete information in the accessories catalogue pages.

Technical data valid for copper conductors only.

1SNC161087S0201 - Rev. A

M6/8.NT screw clamp terminal blocks

Neutral disconnect - 8 mm 0.315 in spacing

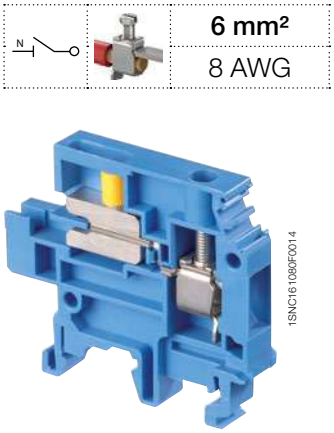

6 mm²
8 AWG

M6/8.NT

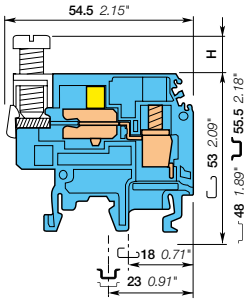

8 mm 0.315 in spacing

Description

- Ease the disconnection of your neutral circuits,
- Compatible with screw clamp terminal blocks, wire size 2.5 mm² (5 mm 0.200 in spacing) to 16 mm² (12 mm 0.473 in spacing).

Ordering details

Description		Color	Type	Part Number		Pkg pce	Weight (1 pce) g
Neutral disconnect	For busbar 10 x 3 mm	Blue	M6/8.NT	1SNA125119R1400		50	17.00

Main technical data

		IEC	UL	CSA
1 conductor per clamp	Rigid: Solid/Stranded	0.5-10 mm²		18-8 AWG
	Flexible without ferrule	0.5-6 mm²		
	Flexible with insulated ferrule			
	Gauge	A5		
Rated current / Rated cross section		41 A / 6 mm²		50 A / 8 AWG
Rated short-time withstand current (1s)		720 A		
Rated voltage		400 V		300 V
Impulse withstand voltage		6000 V		
Protection			NEMA	

Mounting instructions

Rail		G32, TH 35-7.5, TH 35-15
Wire stripping length		12 mm 0.47 in
Screw clamp Tool		Flat screwdriver Ø 4-5 mm Ø 0.16-0.20 in
Torque		0.8 - 1 N.m 7.1 - 8.9 lb.in
Disconnect device Tool		Flat screwdriver Ø 4 mm Ø 0.16 in
Torque		0.4 - 0.6 N.m 3.5 - 5.3 lb.in

The connecting capacity data for one Rigid: Solid/Stranded, or one Flexible conductor (when applicable) is a mandatory information required by IEC, UL and CSA standards (Copper conductors). All other data are provided as supplementary information only. for more details, please consult our CB, UL or CSA certificates and technical datasheet available on http://www.TE.com

CE RoHS CSA Gost R

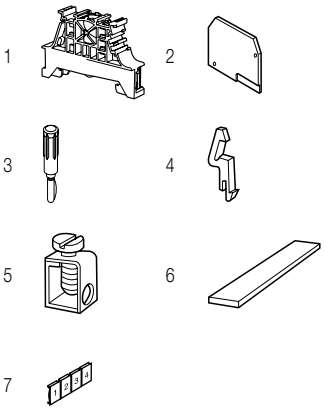

Accessories

	Description			Color	Type	Part Number		Pkg pce	Weight (1 pce) g
1	End stops	10 mm	0.394 in	Dark grey	BAM4	1SNK900001R0000		50	14.00
		5.2 mm	0.205 in		BAZ1	1SNK900002R0000		50	5.30
2	End sections	2.8 mm	0.110 in	Grey	FEM6	1SNA118368R1600		20	2.40
3	Test plugs	DIA 2 mm	0.079 in	Black	FC2	1SNA007865R2600		100	
4	Locking devices	For busbar BO3		Blue	VRB3	1SNA128035R1600		10	
5	Clamps	0.5-35 mm²	18-2 AWG		SFB1	1SNA163860R0500		50	12.00
		16-35 mm²	6-2 AWG		SFB2	1SNA168956R0600		50	11.00
6	Busbars	Busbars			BO3	1SNA164406R2400		1	
7	Terminal block markers	Blank card		White	RC810	1SNA234000R0200		1	8.20

Complete list of accessories is indicated in the terminal block datasheet.
Some accessories such as jumper bars may modify the terminal block's ratings: complete information in the accessories catalogue pages.

Technical data valid for copper conductors only

M10/10.NT screw clamp terminal blocks

Neutral disconnect - 10 mm 0.394 in spacing

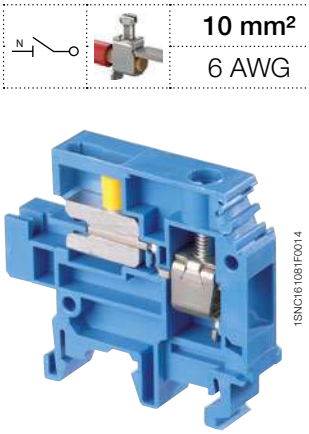

M10/10.NT

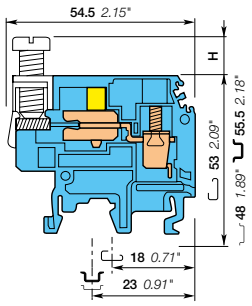

10 mm 0.394 in spacing

10 mm²	6 AWG

Description

- Ease the disconnection of your neutral circuits,
- Compatible with screw clamp terminal blocks, wire size 2.5 mm² (5 mm 0.200 in spacing) to 16 mm² (12 mm 0.473 in spacing).

Ordering details

Description		Color	Type	Part Number		Pkg pce	Weight (1 pce) g
Neutral disconnect	For busbar 10 x 3 mm	Blue	M10/10.NT	1SNA125121R0600		50	19.00

Main technical data

		IEC	UL	CSA
1 conductor per clamp	Rigid: Solid/Stranded	0.5-16 mm²		18-6 AWG
	Flexible without ferrule	0.5-10 mm²		
	Flexible with insulated ferrule			
	Gauge	B6		
Rated current / Rated cross section		57 A / 10 mm²		75 A / 6 AWG
Rated short-time withstand current (1s)		1200 A		
Rated voltage		400 V		300 V
Impulse withstand voltage		6000 V		
Protection			NEMA	

Mounting instructions

Rail	G32, TH 35-7.5, TH 35-15
Wire stripping length	12 mm 0.47 in
Screw clamp Tool	Flat screwdriver Ø 5.5-6 mm Ø 0.22-0.24 in
Torque	1.2 - 1.4 N.m 10.6 - 12.3 lb.in
Disconnect device Tool	Flat screwdriver Ø 4 mm Ø 0.16 in
Torque	0.4 - 0.6 N.m 3.5 - 5.3 lb.in

The connecting capacity data for one Rigid: Solid/Stranded, or one Flexible conductor (when applicable) is a mandatory information required by IEC, UL and CSA standards (Copper conductors). All other data are provided as supplementary information only. For more details, please consult our CB, UL or CSA certificates and technical datasheet available on http://www.TE.com

CE RoHS CSA Gost R

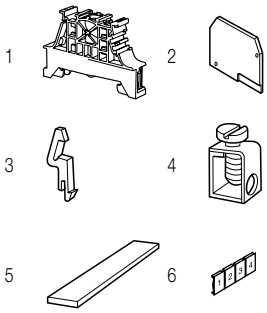

Accessories

	Description			Color	Type	Part Number		Pkg pce	Weight (1 pce) g
1	**End stops**	10 mm	0.394 in	Dark grey	BAM4	1SNK900001R0000		50	14.00
		5.2 mm	0.205 in		BAZ1	1SNK900002R0000		50	5.30
2	**End sections**	2.8 mm	0.110 in	Grey	FEM6	1SNA118368R1600		20	2.40
3	**Locking devices**	For busbar BO3		Blue	VRB3	1SNA128035R1600		10	
4	**Clamps**	0.5-35 mm² 18-2 AWG			SFB1	1SNA163860R0500		50	12.00
		16-35 mm² 6-2 AWG			SFB2	1SNA168956R0600		50	11.00
5	**Busbars**	Busbars			BO3	1SNA164406R2400		1	
6	**Terminal block markers**	Blank card		White	RC1010	1SNA238000R1600		1	1.30

Complete list of accessories is indicated in the terminal block datasheet.
Some accessories such as jumper bars may modify the terminal block's ratings: complete information in the accessories catalogue pages.

Technical data valid for copper conductors only

1SNC161089S0201 - Rev. A

M16/12.NT screw clamp terminal blocks

Neutral disconnect - 12 mm 0.472 in spacing

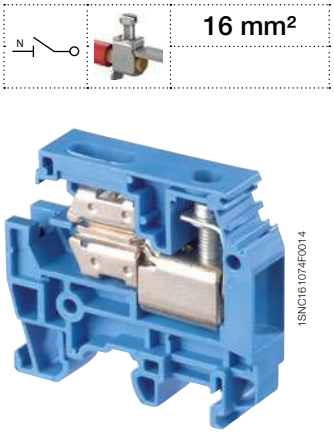

M16/12.NT

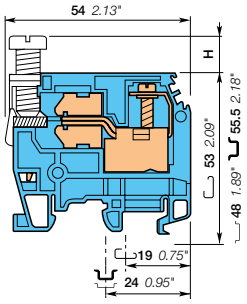

12 mm 0.472 in spacing

Description

- Ease the disconnection of your neutral circuits,
- Compatible with screw clamp terminal blocks, wire size 2.5 mm² (5 mm 0.200 in spacing) to 16 mm² (12 mm 0.473 in spacing).

Ordering details

Description		Color	Type	Part Number		Pkg pce	Weight (1 pce) g
Neutral disconnect	For busbar 10 x 3 mm	Blue	M16/12.NT1	1SNA125593R0000		20	26.00

Main technical data

		IEC	UL	CSA
1 conductor per clamp	Rigid: Solid/Stranded	2.5-25 mm²		
	Flexible without ferrule	2.5-16 mm²		
	Flexible with insulated ferrule			
	Gauge	B7		
Rated current / Rated cross section		76 A / 16 mm²		
Rated short-time withstand current (1s)		1920 A		
Rated voltage		400 V		
Impulse withstand voltage		6000 V		
Protection			NEMA	

Mounting instructions

Rail		G32, TH 35-7.5, TH 35-15
Wire stripping length		14 mm 0.51 in
Screw clamp Tool		Flat screwdriver Ø 5.5 mm Ø 0.22 in
Torque		1.2 - 1.4 N.m 10.6 - 12.3 lb.in
Disconnect device Tool		Flat screwdriver Ø 4 mm Ø 0.16 in
Torque		0.5 - 0.8 N.m 4.4 - 7.1 lb.in

The connecting capacity data for one Rigid: Solid/Stranded, or one Flexible conductor (when applicable) is a mandatory information required by IEC, UL and CSA standards (Copper conductors). All other data are provided as supplementary information only. for more details, please consult our CB, UL or CSA certificates and technical datasheet available on http://www.TE.com

CE RoHS Gost R

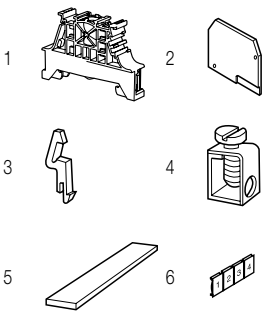

Accessories

	Description			Color	Type	Part Number		Pkg pce	Weight (1 pce) g
1	**End stops**	10 mm	0.394 in	Dark grey	BAM4	1SNK900001R0000		50	14.00
		5.2 mm	0.205 in		BAZ1	1SNK900002R0000		50	5.30
2	**End sections**	2.8 mm	0.110 in	Grey	FEM6	1SNA118368R1600		20	2.40
3	**Locking devices**	For busbar BO3		Blue	VRB3	1SNA128035R1600		10	
		For busbar BO6			VRB6	1SNA128361R0100		20	
4	**Clamps**	0.5-35 mm² 18-2 AWG			SFB1	1SNA163860R0500		50	12.00
		16-35 mm² 6-2 AWG			SFB2	1SNA168956R0600		50	11.00
5	**Busbars**	Busbars			BO3	1SNA164406R2400		1	
6	**Terminal block markers**	Blank card		White	RC1010	1SNA238000R1600		1	1.30

Complete list of accessories is indicated in the terminal block datasheet.
Some accessories such as jumper bars may modify the terminal block's ratings: complete information in the accessories catalogue pages.

Technical data valid for copper conductors only

M35/16.NT screw clamp terminal blocks

Neutral disconnect - 17 mm 0.669 in spacing

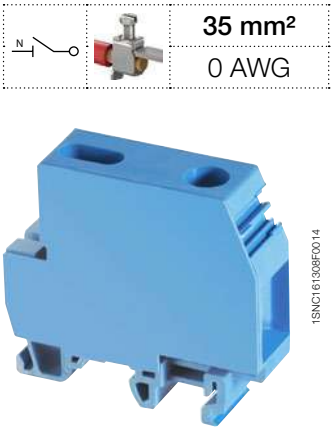

1SNC161308F0014

M35/16.NT

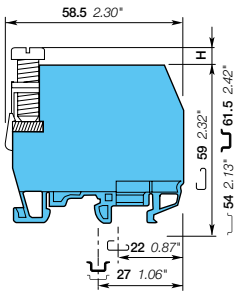

17 mm 0.669 in spacing

35 mm²
0 AWG

Description

- Ease the disconnection of your neutral circuits,
- Close terminal block, no end section needed,
- Compatible with screw clamp terminal blocks, wire size 2.5 mm² (5 mm 0.200 in spacing) to 16 mm² (12 mm 0.473 in spacing).

Ordering details

Description		Color	Type	Part Number		Pkg pce	Weight (1 pce) g
Neutral disconnect	For busbar 10 x 3 mm	Blue	M35/16.NT	1SNA125358R0300		20	60.00

Main technical data

		IEC	UL	CSA
1 conductor per clamp	Rigid: Solid/Stranded	10-50 mm²		
	Flexible without ferrule	10-35 mm²		
	Flexible with insulated ferrule			
	Gauge	B9		
Rated current / Rated cross section		125 A / 35 mm²		
Rated short-time withstand current (1s)		4200 A		
Rated voltage		400 V		
Impulse withstand voltage		6000 V		
Protection			NEMA	

Mounting instructions

Rail	G32, TH 35-7.5, TH 35-15
Wire stripping length	17 mm 0.67 in
Screw clamp Tool	Flat screwdriver Ø 6.5-7 mm Ø 0.256 - 0.276 in
Torque	2.8 - 3 Nm 24.6 - 26.1 lb.in
Disconnect device Tool	Flat screwdriver Ø 5.5 mm Ø 0.217 in
Torque	0.5 - 0.8 N.m 4.4 - 7.1 lb.in

The connecting capacity data for one Rigid: Solid/Stranded, or one Flexible conductor (when applicable) is a mandatory information required by IEC, UL and CSA standards (Copper conductors). All other data are provided as supplementary information only. For more details, please consult our CB, UL or CSA certificates and technical datasheet available on http://www.TE.com

CE RoHS Gost R

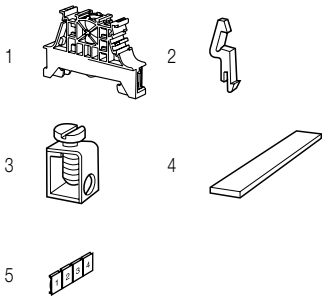

Accessories

	Description			Color	Type	Part Number		Pkg pce	Weight (1 pce) g
1	**End stops**	10 mm	0.394 in	Dark grey	BAM4	1SNK900001R0000		50	14.00
		5.2 mm	0.205 in		BAZ1	1SNK900002R0000		50	5.30
2	**Locking devices**	For busbar BO3		Blue	VRB3	1SNA128035R1600		10	
3	**Clamps**	0.5-35 mm² 18-2 AWG			SFB1	1SNA163860R0500		50	12.00
		16-35 mm² 6-2 AWG			SFB2	1SNA168956R0600		50	11.00
4	**Busbars**				BO3	1SNA164406R2400		1	
5	**Terminal block markers** Blank card			White	RC1010	1SNA238000R1600		1	1.30

Complete list of accessories is indicated in the terminal block datasheet.
Some accessories such as jumper bars may modify the terminal block's ratings: complete information in the accessories catalogue pages.

Technical data valid for copper conductors only.

1SNC161156S0201 - Rev. A

D2.5/5.NTLP.L spring terminal blocks
Installation - 5 mm 0.197 in spacing

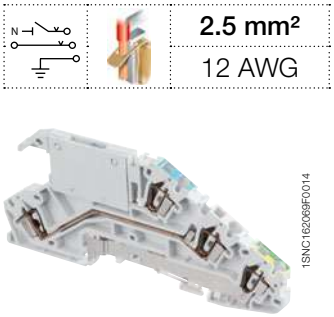

D2.5/5.NTLP.L

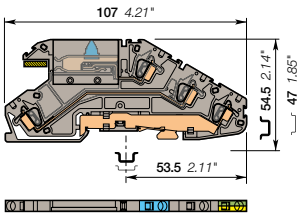

5 mm 0.197 in spacing

2.5 mm²	
12 AWG	

Description

- Specially developped for TN-C-S Network,
- Easy disconnection of neutral for isolation,
- Easy to access thanks to the front wiring entry,
- Clamping contact pressure non dependent on the operator and automatic creeping compensation,
- Save space with compact angled terminal blocks.

Ordering details

Description		Color	Type	Part Number		Pkg pce	Weight (1 pce) g
Installation	Disconnect neutral with busbar connection + feed-through + ground circuits	Grey, blue, green-yellow	D2.5/5.NTLP.L	1SNA290322R0100		40	15.00

Main technical data

		IEC	UL	CSA
1 conductor per clamp	Rigid: Solid/Stranded	0.14-4 mm²	26-12 AWG	
	Flexible without ferrule	0.14-2.5 mm²		
	Flexible with non insulated ferrule			
	Flexible with insulated ferrule	0.5-2.5 mm²		
	Gauge	A2		
Rated current / Rated cross section		20 A / 2.5 mm²	20 A / 12 AWG	
Rated short-time withstand current (1s)		300 A		
Rated voltage		250 V	300 V	
Impulse withstand voltage		4000 V		
Protection		IP20	NEMA 1	

Mounting instructions

Rail	TH 35-7.5, TH 35-15
Wire stripping length	9.5 mm 0.37 in
Tool	Flat screwdriver Ø 3.5 mm Ø 0.138 in

The connecting capacity data for one Rigid: Solid/Stranded, or one Flexible conductor (when applicable) is a mandatory information required by IEC, UL and CSA standards (Copper conductors). All other data are provided as supplementary information only. For more details, please consult our CB, UL or CSA certificates and technical datasheet available on http://www.TE.com

RoHS / USR CNR / Gost R

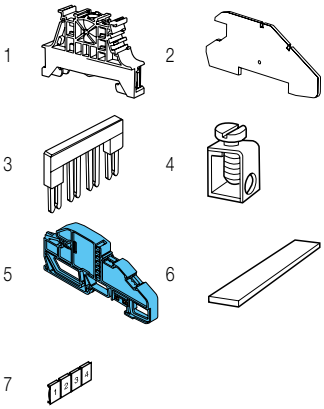

Accessories

	Description			Color	Type	Part Number		Pkg pce	Weight (1 pce) g
1	End stops	5.2 mm	0.205 in	Dark grey	BAZ1	1SNK900002R0000		50	5.30
		10 mm	0.394 in		BAM4	1SNK900001R0000		50	14.00
2	End sections	2.5 mm	0.098 in	Grey	FED5.L.A	1SNA291559R0400		20	5.50
3	Jumper bars	2 poles	24 A	Orange	BJDL5-2	1SNA291102R2300		50	1.00
		3 poles			BJDL5-3	1SNA291103R2400		50	0.70
		4 poles			BJDL5-4	1SNA291104R2500		50	0.80
		5 poles			BJDL5-5	1SNA291105R2600		20	0.90
		10 poles			BJDL5-10	1SNA291110R2600		20	1.20
4	Clamps	0.5-35 mm²	18-2 AWG		SFB1	1SNA163860R0500		50	12.00
		16-35 mm²	6-2 AWG		SFB2	1SNA168956R0600		50	11.00
5	Distribution bar holders			Blue	SPBO.NT.L	1SNA399886R2100		20	12.00
6	Busbars	1000 x 10 x 3 mm	39.4 x 0.394 x 0.118 in		BO3	1SNA164406R2400		1	
7	Terminal block markers	Blank card		White	RC55	1SNA230000R1200		1	2.90

Complete list of accessories is indicated in the terminal block datasheet.
Some accessories such as jumper bars may modify the terminal block's ratings: complete information in the accessories catalogue pages.

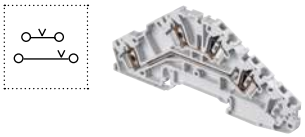

Installation spring terminal blocks

Description		Color	Type	Part Number		Pkg pce	Weight (1 pce) g
Installation	2 feed-through circuits	Grey	D2.5/5.LL.L	1SNA290328R1700		40	13.00

Technical data valid for copper conductors only.

1SNC162038S0201 - Rev. A

D2.5/5.NLP.L spring terminal blocks
Installation - 5 mm 0.197 in spacing

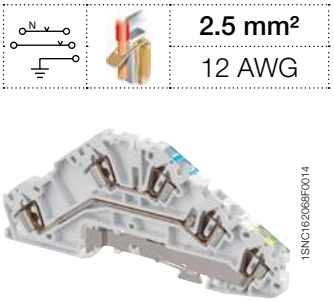

2.5 mm²
12 AWG

D2.5/5.NLP.L

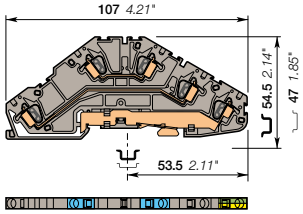

5 mm 0.197 in spacing

Description

- Specially developped for TN-C-S Network,
- Easy to access thanks to the front wiring entry,
- Clamping contact pressure non dependent on the operator and automatic creeping compensation,
- Save space with compact angled terminal blocks.

Ordering details

Description		Color	Type	Part Number		Pkg pce	Weight (1 pce) g
Installation	Neutral + feed-through + ground circuits	Grey, blue, Green-yellow	D2.5/5.NLP.L	1SNA290324R0300		40	17.00

Main technical data

		IEC	UL	CSA
1 conductor per clamp	Rigid: Solid/Stranded	0.14-4 mm²	26-12 AWG	
	Flexible without ferrule	0.14-2.5 mm²		
	Flexible with non insulated ferrule			
	Flexible with insulated ferrule	0.5-2.5 mm²		
	Gauge	A2		
Rated current / Rated cross section		24 A / 2.5 mm²	20 A / 12 AWG	
Rated short-time withstand current (1s)		300 A		
Rated voltage		250 V	300 V	
Impulse withstand voltage		4000 V		
Protection		IP20	NEMA 1	

The connecting capacity data for one Rigid: Solid/Stranded, or one Flexible conductor (when applicable) is a mandatory information required by IEC, UL and CSA standards (Copper conductors). All other data are provided as supplementary information only. For more details, please consult our CB, UL or CSA certificates and technical datasheet available on http://www.TE.com

RoHS USR CNR Gost R

Mounting instructions

Rail	TH 35-7.5, TH 35-15
Wire stripping length	9.5 mm 0.37 in
Tool	Flat screwdriver Ø 3.5 mm Ø 0.138 in

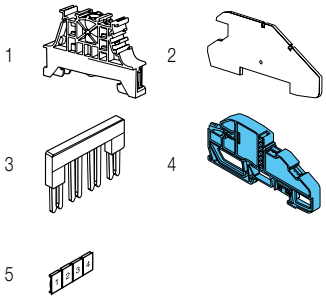

Accessories

	Description			Color	Type	Part Number		Pkg pce	Weight (1 pce) g
1	**End stops**	5.2 mm	0.205 in	Dark grey	BAZ1	1SNK900002R0000		50	5.30
		10 mm	0.394 in		BAM4	1SNK900001R0000		50	14.00
2	**End sections**	2.5 mm	0.098 in	Grey	FED5.L.B	1SNA291560R0100		20	5.50
3	**Jumper bars**	2 poles	24 A	Orange	BJDL5-2	1SNA291102R2300		50	1.00
		3 poles			BJDL5-3	1SNA291103R2400		50	0.70
		4 poles			BJDL5-4	1SNA291104R2500		50	0.80
		5 poles			BJDL5-5	1SNA291105R2600		20	0.90
		10 poles			BJDL5-10	1SNA291110R2600		20	1.20
4	**Distribution bar holders**			Blue	SPBO.NT.L	1SNA399886R2100		20	12.00
5	**Terminal block markers** Blank card			White	RC55	1SNA230000R1200		1	2.90

Complete list of accessories is indicated in the terminal block datasheet.
Some accessories such as jumper bars may modify the terminal block's ratings: complete information in the accessories catalogue pages.

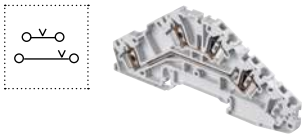

Installation spring terminal blocks

Description		Color	Type	Part Number		Pkg pce	Weight (1 pce) g
Installation	2 feed-through circuits	Grey	D2.5/5.LL.L	1SNA290328R1700		40	13.00

Technical data valid for copper conductors only.

1SNC162039S0201 - Rev. A

D2.5/5.NL.L spring terminal blocks
Installation - 5 mm 0.197 in spacing

2.5 mm²
12 AWG

1SNC162096F0014

D2.5/5.NL.L

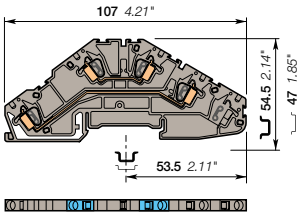

5 mm 0.197 in spacing

Description

- Specially developped for TN-C-S Network,
- Easy to access thanks to the front wiring entry,
- Clamping contact pressure non dependent on the operator and automatic creeping compensation,
- Save space with compact angled terminal blocks.

Ordering details

Description		Color	Type	Part Number		Pkg pce	Weight (1 pce) g
Installation	Neutral + feed-through circuits	Grey, blue	D2.5/5.NL.L	1SNA290330R1500		40	13.00

Main technical data

		IEC	UL	CSA
1 conductor per clamp	Rigid: Solid/Stranded	0.14-4 mm²	26-12 AWG	
	Flexible without ferrule	0.14-2.5 mm²		
	Flexible with non insulated ferrule			
	Flexible with insulated ferrule	0.5-2.5 mm²		
	Gauge	A2		
Rated current / Rated cross section		24 A / 2.5 mm²	20 A / 12 AWG	
Rated short-time withstand current (1s)		300 A		
Rated voltage		400 V	300 V	
Impulse withstand voltage		6000 V		
Protection		IP20	NEMA 1	

Mounting instructions

Rail	TH 35-7.5, TH 35-15
Wire stripping length	9.5 mm 0.37 in
Tool	Flat screwdriver Ø 3.5 mm Ø 0.138 in

The connecting capacity data for one Rigid: Solid/Stranded, or one Flexible conductor (when applicable) is a mandatory information required by IEC, UL and CSA standards (Copper conductors). All other data are provided as supplementary information only. For more details, please consult our CB, UL or CSA certificates and technical datasheet available on http://www.TE.com

RoHS — RoHS; USR CNR; Gost R

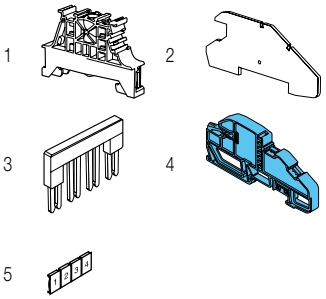

Accessories

	Description			Color	Type	Part Number		Pkg pce	Weight (1 pce) g
1	**End stops**	5.2 mm	0.205 in	Dark grey	BAZ1	1SNK900002R0000		50	5.30
		10 mm	0.394 in		BAM4	1SNK900001R0000		50	14.00
2	**End sections**	2.5 mm	0.098 in	Grey	FED5.L.B	1SNA291560R0100		20	5.50
3	**Jumper bars**	2 poles	24 A	Orange	BJDL5-2	1SNA291102R2300		50	1.00
		3 poles			BJDL5-3	1SNA291103R2400		50	0.70
		4 poles			BJDL5-4	1SNA291104R2500		50	0.80
		5 poles			BJDL5-5	1SNA291105R2600		20	0.90
		10 poles			BJDL5-10	1SNA291110R2600		20	1.20
4	**Distribution bar holders**			Blue	SPBO.NT.L	1SNA399886R2100		20	12.00
5	**Terminal block markers**	Blank card		White	RC55	1SNA230000R1200		1	2.90

Complete list of accessories is indicated in the terminal block datasheet.
Some accessories such as jumper bars may modify the terminal block's ratings: complete information in the accessories catalogue pages.

Installation spring terminal blocks

Description		Color	Type	Part Number		Pkg pce	Weight (1 pce) g
Installation	2 feed-through + ground circuits	Grey, green-yellow	D2.5/5.LLP.L	1SNA290326R0500		40	17.00

Technical data valid for copper conductors only.

1SNC162041S0201 - Rev. A

D2.5/5.LLP.L spring terminal blocks
Installation - 5 mm 0.197 in spacing

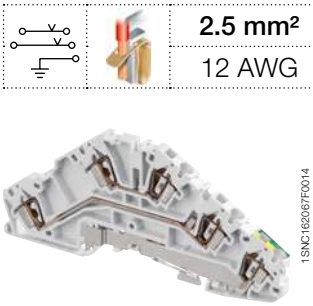

D2.5/5.LLP.L

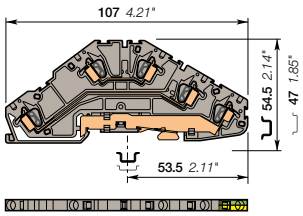

5 mm 0.197 in spacing

2.5 mm²
12 AWG

Description

- Specially developped for TN-C-S Network,
- Easy to access thanks to the front wiring entry,
- Clamping contact pressure non dependent on the operator and automatic creeping compensation,
- Save space with compact angled terminal blocks.

Ordering details

Description		Color	Type	Part Number		Pkg pce	Weight (1 pce) g
Installation	2 feed-through + ground circuits	Grey, Green-yellow	D2.5/5.LLP.L	1SNA290326R0500		40	17.00

Main technical data

		IEC	UL	CSA
1 conductor per clamp	Rigid: Solid/Stranded	0.14-4 mm²	26-12 AWG	
	Flexible without ferrule	0.14-2.5 mm²		
	Flexible with non insulated ferrule			
	Flexible with insulated ferrule	0.5-2.5 mm²		
	Gauge	A2		
Rated current / Rated cross section		24 A / 2.5 mm²	20 A / 12 AWG	
Rated short-time withstand current (1s)		300 A		
Rated voltage		250 V	300 V	
Impulse withstand voltage		4000 V		
Protection		IP20	NEMA 1	

Mounting instructions

Rail	TH 35-7.5, TH 35-15
Wire stripping length	9.5 mm 0.37 in
Tool	Flat screwdriver Ø 3.5 mm Ø 0.138 in

The connecting capacity data for one Rigid: Solid/Stranded, or one Flexible conductor (when applicable) is a mandatory information required by IEC, UL and CSA standards (Copper conductors). All other data are provided as supplementary information only. For more details, please consult our CB, UL or CSA certificates and technical datasheet available on http://www.TE.com

RoHS — USR CNR — Gost R

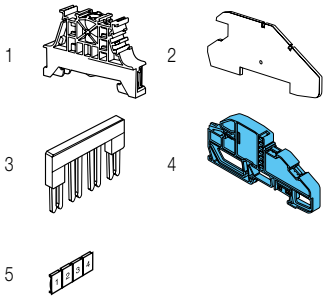

Accessories

	Description			Color	Type	Part Number		Pkg pce	Weight (1 pce) g
1	**End stops**	5.2 mm	0.205 in	Dark grey	BAZ1	1SNK900002R0000		50	5.30
		10 mm	0.394 in		BAM4	1SNK900001R0000		50	14.00
2	**End sections**	2.5 mm	0.098 in	Grey	FED5.L.B	1SNA291560R0100		20	5.50
3	**Jumper bars**	2 poles	24 A	Orange	BJDL5-2	1SNA291102R2300		50	1.00
		3 poles			BJDL5-3	1SNA291103R2400		50	0.70
		4 poles			BJDL5-4	1SNA291104R2500		50	0.80
		5 poles			BJDL5-5	1SNA291105R2600		20	0.90
		10 poles			BJDL5-10	1SNA291110R2600		20	1.20
4	**Distribution bar holders**			Blue	SPBO.NT.L	1SNA399886R2100		20	12.00
5	**Terminal block markers** Blank card			White	RC55	1SNA230000R1200		1	2.90

Complete list of accessories is indicated in the terminal block datasheet.
Some accessories such as jumper bars may modify the terminal block's ratings: complete information in the accessories catalogue pages.

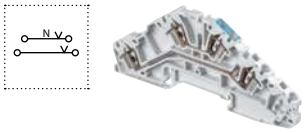

Installation spring terminal blocks

Description		Color	Type	Part Number		Pkg pce	Weight (1 pce) g
Installation	Neutral + feed-through circuits	Grey, blue	D2.5/5.NL.L	1SNA290330R1500		40	13.00

Technical data valid for copper conductors only.

1SNC162040S0201 - Rev. A

D2.5/5.LL.L spring terminal blocks
Installation - 5 mm 0.197 in spacing

2.5 mm²
12 AWG

D2.5/5.LL.L

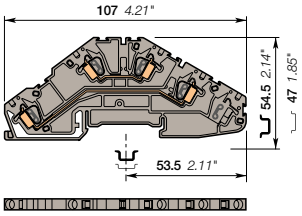

5 mm 0.197 in spacing

Description

- Specially developped for TN-C-S Network,
- Easy to access thanks to the front wiring entry,
- Clamping contact pressure non dependent on the operator and automatic creeping compensation,
- Save space with compact angled terminal blocks.

Ordering details

Description		Color	Type	Part Number		Pkg pce	Weight (1 pce) g
Installation	2 feed-through circuits	Grey	D2.5/5.LL.L	1SNA290328R1700		40	13.00

Main technical data

		IEC	UL	CSA
1 conductor per clamp	Rigid: Solid/Stranded	0.14-4 mm²	26-12 AWG	
	Flexible without ferrule	0.14-2.5 mm²		
	Flexible with non insulated ferrule			
	Flexible with insulated ferrule	0.5-2.5 mm²		
	Gauge	A2		
Rated current / Rated cross section		24 A / 2.5 mm²	20 A / 12 AWG	
Rated short-time withstand current (1s)		300 A		
Rated voltage		400 V	300 V	
Impulse withstand voltage		6000 V		
Protection		IP20	NEMA 1	

The connecting capacity data for one Rigid: Solid/Stranded, or one Flexible conductor (when applicable) is a mandatory information required by IEC, UL and CSA standards (Copper conductors). All other data are provided as supplementary information only. For more details, please consult our CB, UL or CSA certificates and technical datasheet available on http://www.TE.com

RoHS — USR CNR — Gost R

Mounting instructions

Rail	TH 35-7.5, TH 35-15
Wire stripping length	9.5 mm 0.37 in
Tool	Flat screwdriver Ø 3.5 mm Ø 0.138 in

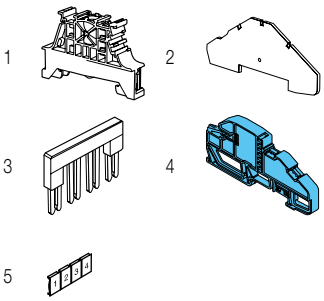

Accessories

	Description			Color	Type	Part Number		Pkg pce	Weight (1 pce) g
1	End stops	5.2 mm	0.205 in	Dark grey	BAZ1	1SNK900002R0000		50	5.30
		10 mm	0.394 in		BAM4	1SNK900001R0000		50	14.00
2	End sections	2.5 mm	0.098 in	Grey	FED5.L.B	1SNA291560R0100		20	4.75
3	Jumper bars	2 poles	24 A	Orange	BJDL5-2	1SNA291102R2300		50	1.00
		3 poles			BJDL5-3	1SNA291103R2400		50	0.70
		4 poles			BJDL5-4	1SNA291104R2500		50	0.80
		5 poles			BJDL5-5	1SNA291105R2600		20	0.90
		10 poles			BJDL5-10	1SNA291110R2600		20	1.20
4	Distribution bar holders			Blue	SPBO.NT.L	1SNA399886R2100		20	12.00
5	Terminal block markers	Blank card		White	RC55	1SNA230000R1200		1	2.90

Complete list of accessories is indicated in the terminal block datasheet.
Some accessories such as jumper bars may modify the terminal block's ratings: complete information in the accessories catalogue pages.

Technical data valid for copper conductors only.

1SNC162042S0201 - Rev. A

Overview 238

Screw clamp technology

Ground + neutral

10 mm²	**M10/10.PE.N**	239
16 mm²	**M16/12.PE.N**	240
35 mm²	**M35/16.PE.N**	241

1SNC160104S0201

Screw clamp technology

Section		PEN	Feed-through
IEC	UL/CSA		
10 mm²		**M10/10.PE.N** 20 mm 0.787 in	**M10/10** 10 mm 0.394 in
16 mm²		**M16/12.PE.N** 24 mm 0.945 in	**M16/12** 12 mm 0.472 in
35 mm²		**M35/16.PE.N** 32 mm 1.260 in	**M35/16** 16 mm 0.630 in

1SNC160097S0201

M10/10.PE.N screw clamp terminal blocks

Ground + neutral - 20 mm 0.787 in spacing

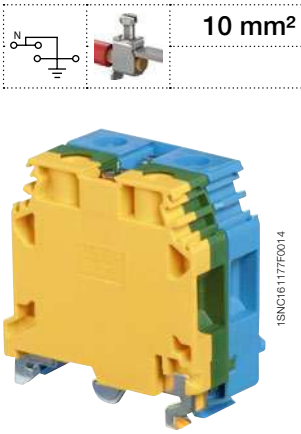

M10/10.PE.N

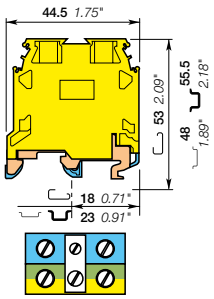

20 mm 0.787 in spacing

10 mm²

Description

- Simplify your PE.N connection with M10/10.P block connected to M10/10.N block through a pre-mounted jumper,
- Adapted to TNS and TNC-S electrical network.

Ordering details

Description		Color	Type	Part Number		Pkg pce	Weight (1 pce) g
Ground + neutral	Screw rail connection	Green-yellow, blue	M10/10.PE.N	1SNA165683R2200		20	53.00

Main technical data

		IEC	UL	CSA
1 conductor per clamp	Rigid: Solid/Stranded	0.5-16 mm²		
	Flexible without ferrule	0.5-10 mm²		
	Flexible with insulated ferrule			
	Gauge	B6		
Rated cross section		10 mm²		
Rated short-time withstand current (1s)		1200 A		

Mounting instructions

Rail	G32, TH 35-7.5, TH 35-15
Wire stripping length	12 mm 0.47 in
Screw clamp Tool	Flat screwdriver Ø 5.5 mm Ø 0.22 in
Torque	1.2 - 1.4 N.m 10.6 - 12.3 lb.in
Rail connection screw Tool	Flat screwdriver Ø 4 mm Ø 0.16 in
Torque	0.8 N.m 7.1 lb.in

The connecting capacity data for one Rigid: Solid/Stranded, or one Flexible conductor (when applicable) is a mandatory information required by IEC, UL and CSA standards (Copper conductors). All other data are provided as supplementary information only. For more details, please consult our CB, UL or CSA certificates and technical datasheet available on http://www.TE.com

CE RoHS Gost R

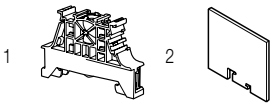

Accessories

	Description			Color	Type	Part Number		Pkg pce	Weight (1 pce) g
1	**End stops**	10 mm	0.394 in	Dark grey	BAM4	1SNK900001R0000		50	14.00
		5.2 mm	0.205 in		BAZ1	1SNK900002R0000		50	5.30
2	**Circuit separators**	2.4 mm	0.094 in	Grey	SCFEX1	1SNA103619R0400		10	30.00
					SCFEX3	1SNA103620R0100		10	30.00
		3 mm	0.118 in		SCFM6	1SNA114825R0500		20	4.00

Complete list of accessories is indicated in the terminal block datasheet.
Some accessories such as jumper bars may modify the terminal block's ratings: complete information in the accessories catalogue pages.

Technical data valid for copper conductors only.

M16/12.PE.N screw clamp terminal blocks

Ground + neutral - 24 mm 0.945 in spacing

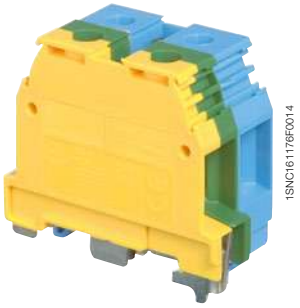

M16/12.PE.N

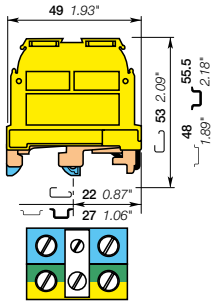

24 mm 0.945 in spacing

Description

- Simplify your PE.N connection with M16/12.P block connected to M16/12.N block through a pre-mounted jumper,
- Adapted to TNS and TNC-S electrical network.

Ordering details

Description		Color	Type	Part Number		Pkg pce	Weight (1 pce) g
Ground + neutral	Screw rail connection	Green-yellow, blue	M16/12.PE.N	1SNA165680R0300		20	68.00

Main technical data

		IEC	UL	CSA
1 conductor per clamp	Rigid: Solid/Stranded	2.5-25 mm²		
	Flexible without ferrule	2.5-16 mm²		
	Flexible with insulated ferrule			
	Gauge	B7		
Rated cross section		16 mm²		
Rated short-time withstand current (1s)		1920 A		

Mounting instructions

Rail	G32, TH 35-7.5, TH 35-15
Wire stripping length	14 mm 0.55 in
Screw clamp Tool	Flat screwdriver Ø 5.5 mm Ø 0.22 in
Torque	1.2 - 1.4 N.m 10.6 - 12.3 lb.in
Rail connection screw Tool	Flat screwdriver Ø 5.5 mm Ø 0.22 in
Torque	1 N.m 8.8 lb.in

The connecting capacity data for one Rigid: Solid/Stranded, or one Flexible conductor (when applicable) is a mandatory information required by IEC, UL and CSA standards (Copper conductors). All other data are provided as supplementary information only. For more details, please consult our CB, UL or CSA certificates and technical datasheet available on http://www.TE.com

CE RoHS Gost R

Accessories

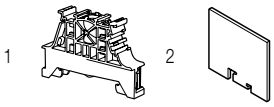

	Description			Color	Type	Part Number		Pkg pce	Weight (1 pce) g
1	**End stops**	10 mm	0.394 in	Dark grey	BAM4	1SNK900001R0000		50	14.00
		5.2 mm	0.205 in		BAZ1	1SNK900002R0000		50	5.30
2	**Circuit separators**	2.4 mm	0.094 in	Grey	SCFEX1	1SNA103619R0400		10	30.00
					SCFEX3	1SNA103620R0100		10	30.00
		3 mm	0.118 in		SCFM6	1SNA114825R0500		20	4.00

Complete list of accessories is indicated in the terminal block datasheet.
Some accessories such as jumper bars may modify the terminal block's ratings: complete information in the accessories catalogue pages.

Technical data valid for copper conductors only.

M35/16.PE.N screw clamp terminal blocks

Ground + neutral - 32 mm 1.260 in spacing

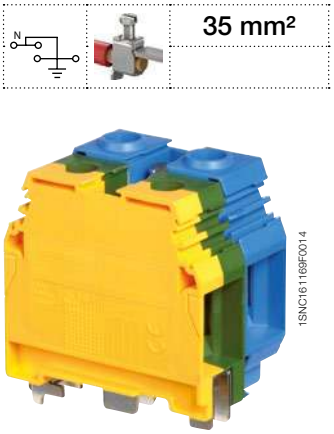

M35/16.PE.N

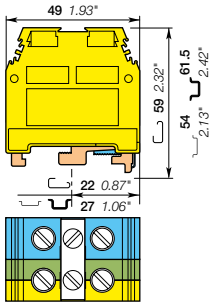

32 mm 1.260 in spacing

Description

- Simplify your PE.N connection with M35/16.P block connected to M35/16.N block through a pre-mounted jumper,
- Adapted to TNS and TNC-S electrical network.

Ordering details

Description		Color	Type	Part Number		Pkg pce	Weight (1 pce) g
Ground + neutral	Screw rail connection	Green-yellow, blue	M35/16.PE.N	1SNA165575R2500		10	119.00

Main technical data

		IEC	UL	CSA
1 conductor per clamp	Rigid: Solid/Stranded	6-50 mm²		
	Flexible without ferrule	6-35 mm²		
	Flexible with insulated ferrule			
	Gauge	B9		
Rated cross section		35 mm²		
Rated short-time withstand current (1s)		4200 A		

Mounting instructions

Rail		G32, TH 35-7.5, TH 35-15
Wire stripping length		17 mm 0.67 in
Screw clamp Tool		Flat screwdriver Ø 7 mm Ø 0.32 in
Torque		2.8 - 3 N.m 24.6 - 26.1 lb.in
Rail connection screw Tool		Flat screwdriver Ø 5.5 mm Ø 0.22 in
Torque		1 N.m 8.8 lb.in

The connecting capacity data for one Rigid: Solid/Stranded, or one Flexible conductor (when applicable) is a mandatory information required by IEC, UL and CSA standards (Copper conductors). All other data are provided as supplementary information only. For more details, please consult our CB, UL or CSA certificates and technical datasheet available on http://www.TE.com

CE RoHS Gost R

Accessories

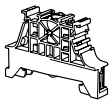

	Description			Color	Type	Part Number		Pkg pce	Weight (1 pce) g
1	**End stops**	10 mm	0.394 in	Dark grey	BAM4	1SNK900001R0000		50	14.00
		5.2 mm	0.205 in		BAZ1	1SNK900002R0000		50	5.30

Complete list of accessories is indicated in the terminal block datasheet.
Some accessories such as jumper bars may modify the terminal block's ratings: complete information in the accessories catalogue pages.

Technical data valid for copper conductors only.

1SNC161171S0201

Overview 244

Screw clamp technology

Disconnect with pull lever

4 mm² / 10 AWG	**M4/6.D2.2S2**	2 disconnect circuits	245
	M4/6.D2.2S2.T	2 disconnect circuits and test	246
	M4/6.D2.S1R	Change over type	247
	M4/6.D2.S1R.T	Change over type and test	248

1SNC161171S0201

Screw clamp technology

Disconnect with pull lever

Section IEC	UL/CSA				
4 mm²	10 AWG	**M4/6.D2.2S2** 6 mm 0.236 in	**M4/6.D2.2S2.T** 6 mm 0.236 in	**M4/6.D2.S1R** 6 mm 0.236 in	**M4/6.D2.S1R.T** 6 mm 0.236 in

1SNC161170S0201 - Rev. A

M4/6.D2.2S2 screw clamp terminal blocks

Disconnect with pull lever - with 2 independent circuits - 6 mm 0.236 in spacing

4 mm²
10 AWG

M4/6.D2.2S2

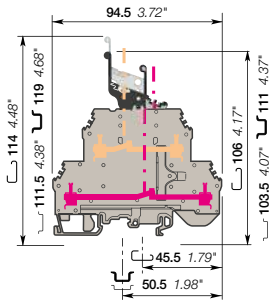

6 mm 0.236 in spacing

Description

- Save space with double deck terminal blocks: 2 idependent disconnect circuits in just 6 mm 0.236 in spacing,
- Black pull lever controls upper deck contact and grey pull lever controls lower deck contact,
- Closed terminal block: no end section needed.

Ordering details

Description		Color	Type	Part Number		Pkg pce	Weight (1 pce) g
Disconnect	With 2 independent circuits	Grey, black	M4/6.D2.2S2	1SNA199444R2500		25	30.00

Main technical data

		IEC	UL	CSA
1 conductor per clamp	Rigid: Solid/Stranded	0.2-4 mm²		24-10 AWG
	Flexible without ferrule	0.2-4 mm²		
	Flexible with insulated ferrule			
	Gauge	A4		
Rated current / Rated cross section		12 A / 1 mm²		10 A / 10 AWG
Rated short-time withstand current (1s)		120 A		
Rated voltage		500 V		300 V
Impulse withstand voltage		6000 V		
Protection		IP20	NEMA 1	

Mounting instructions

Rail	G32, TH 35-7.5, TH 35-15
Wire stripping length	9.5 mm 0.374 in
Tool	Flat screwdriver Ø 4 mm Ø 0.157 in
Torque	0.5 - 0.8 Nm 4.4 - 7.1 lb.in

The connecting capacity data for one Rigid: Solid/Stranded, or one Flexible conductor (when applicable) is a mandatory information required by IEC, UL and CSA standards (Copper conductors). All other data are provided as supplementary information only. For more details, please consult our CB, UL or CSA certificates and technical datasheet available on http://www.TE.com

CE RoHS cCSAus Gost R

Notes

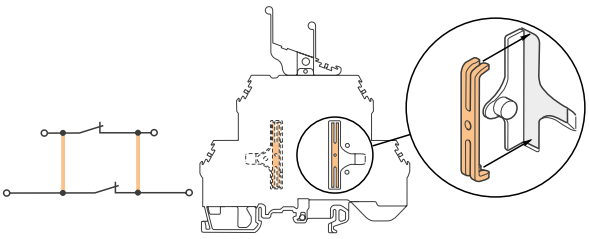

Mounting of the vertical jumper bar between decks (ITVE2).

Interconnection between decks is possible on each side of the switch, using accessory ITVE2.

Trap door opens with a screwdriver.

Accessories

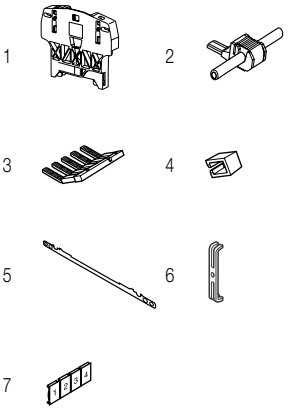

	Description			Color	Type	Part Number		Pkg pce	Weight (1 pce) g
1	**End stops**	10 mm	0.394 in	Dark grey	BAZH1	1SNK900102R0000		20	24.00
2	**Jumper bars**	1 poles	24 A	Grey	AD2.5	1SNA114205R2000		50	1.60
3	**Lateral jumper bars**	2 poles	35 A	Grey	PC6-2	1SNA113546R1400		10	2.00
		3 poles			PC6-3	1SNA116536R0500		10	2.00
		4 poles			PC6-4	1SNA116537R0600		10	3.00
		10 poles			PC6-10	1SNA113548R2600		10	8.00
4	**Insulating tips**	For lateral jumper bars type PC...			EIP	1SNA113550R2400		10	
5	**Shield connectors**				CBD2S	1SNA178408R1400		50	
6	**Inner deck jumper bars**				ITVE2	1SNA179825R2600		20	1.30
7	**Terminal block markers**	Blank card		White	RC610	1SNA233000R0100		1	7.50

Complete list of accessories is indicated in the terminal block datasheet.
Some accessories such as jumper bars may modify the terminal block's ratings: complete information in the accessories catalogue pages.

Technical data valid for copper conductors only.

M4/6.D2.2S2 screw clamp terminal blocks

Disconnect with pull lever with 2 independent circuits and 4 test sockets - 6 mm 0.236 in spacing

4 mm²
10 AWG

M4/6.D2.2S2

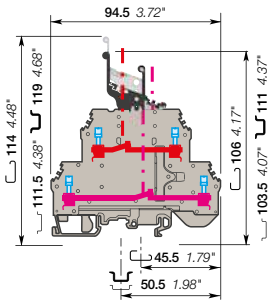

6 mm 0.236 in spacing

Description

- Save space with double deck terminal blocks: 2 idependent disconnect circuits in just 6 mm 0.236 in spacing,
- Black pull lever controls upper deck contact and grey pull lever controls lower deck contact,
- Ease your test operations with the 2 built-in test sockets,
- Closed terminal block: no end section needed.

Ordering details

Description		Color	Type	Part Number		Pkg pce	Weight (1 pce) g
Disconnect	With 2 independent circuits and 4 test sockets DIA 2 mm 0.079 in	Grey, black	M4/6.D2.2S2.T	1SNA199448R0100		25	30.00

Main technical data

		IEC	UL	CSA
1 conductor per clamp	Rigid: Solid/Stranded	0.2-4 mm²		24-10 AWG
	Flexible without ferrule	0.2-4 mm²		
	Flexible with insulated ferrule			
	Gauge	A4		
Rated current / Rated cross section		12 A / 1 mm²		10 A / 10 AWG
Rated short-time withstand current (1s)		120 A		
Rated voltage		500 V		300 V
Impulse withstand voltage		6000 V		
Protection		IP20	NEMA 1	

The connecting capacity data for one Rigid: Solid/Stranded Flexible conductor (when applicable) is a mandatory information required by IEC, UL and CSA standards (Copper conductors). All other data are provided as supplementary information only. For more details, please consult our CB, UL or CSA certificates and technical datasheet available on http://www.TE.com

CE | RoHS | cCSAus | Gost R

Mounting instructions

Rail	G32, TH 35-7.5, TH 35-15
Wire stripping length	9.5 mm 0.374 in
Tool	Flat screwdriver Ø 4 mm Ø 0.157 in
Torque	0.5 - 0.6 Nm 4.4 - 5.3 lb.in

Notes

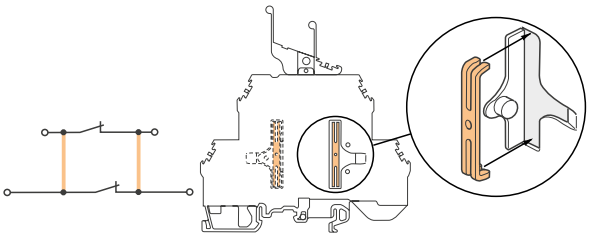

Mounting of the vertical jumper bar between decks (ITVE2).

Interconnection between decks is possible on each side of the switch, using accessory ITVE2.

Trap door opens with a screwdriver.

Accessories

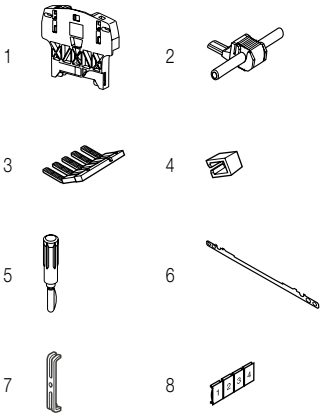

	Description			Color	Type	Part Number		Pkg pce	Weight (1 pce) g
1	**End stops**	10 mm	0.394 in	Dark grey	BAZH1	1SNK900102R0000		20	24.00
2	**Jumper bars**	1 poles	24 A	Grey	AD2.5	1SNA114205R2000		50	1.60
3	**Lateral jumper bars**	2 poles	35 A	Grey	PC6-2	1SNA113546R1400		10	2.00
		3 poles			PC6-3	1SNA116536R0500		10	2.00
		4 poles			PC6-4	1SNA116537R0600		10	3.00
		10 poles			PC6-10	1SNA113548R2600		10	8.00
4	**Insulating tips**	For lateral jumper bars type PC...			EIP	1SNA113550R2400		10	
5	**Test plugs**	DIA 2 mm 0.079 in		Black	FC2	1SNA007865R2600		100	
6	**Shield connectors**				CBD2S	1SNA178408R1400		50	
7	**Inner deck jumper bars**				ITVE2	1SNA179825R2600		20	1.30
8	**Terminal block markers**	Blank card		White	RC610	1SNA233000R0100		1	7.50

Complete list of accessories is indicated in the terminal block datasheet.
Some accessories such as jumper bars may modify the terminal block's ratings: complete information in the accessories catalogue pages.

Technical data valid for copper conductors only.

1SNC161160S0201 Rev. B

M4/6.D2.S1R screw clamp terminal blocks

Disconnect with pull lever - change over type - 6 mm 0.236 in spacing

M4/6.D2.S1R

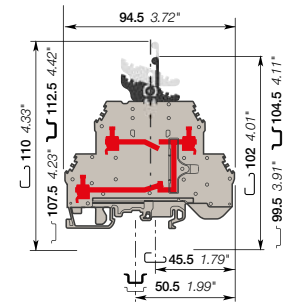

6 mm 0.236 in spacing

	4 mm²
	10 AWG

Description

- Direct a signal either to the upper deck (contact control pull lever in high position), or to the lower deck (pull lever in low position) with just one operation,
- Closed terminal block: no end section needed.

Ordering details

Description		Color	Type	Part Number		Pkg pce	Weight (1 pce) g
Disconnect	Change over type	Grey, black	M4/6.D2.S1R	1SNA199452R2500		25	30.00

Main technical data

		IEC	UL	CSA
1 conductor per clamp	Rigid: Solid/Stranded	0.2-4 mm²		24-10 AWG
	Flexible without ferrule	0.2-4 mm²		
	Flexible with insulated ferrule			
	Gauge	A4		
Rated current / Rated cross section		12 A / 1 mm²		10 A / 10 AWG
Rated short-time withstand current (1s)		120 A		
Rated voltage		500 V		300 V
Impulse withstand voltage		6000 V		
Protection		IP20	NEMA 1	

The connecting capacity data for one Rigid: Solid/Stranded, or one Flexible conductor (when applicable) is a mandatory information required by IEC, UL and CSA standards (Copper conductors). All other data are provided as supplementary information only. For more details, please consult our CB, UL or CSA certificates and technical datasheet available on http://www.TE.com

CE RoHS cCSAus Gost R

Mounting instructions

Rail	G32, TH 35-7.5, TH 35-15
Wire stripping length	9.5 mm 0.374 in
Tool	Flat screwdriver Ø 4 mm Ø 0.157 in
Torque	0.5 - 0.8 Nm 4.4 - 7.1 lb.in

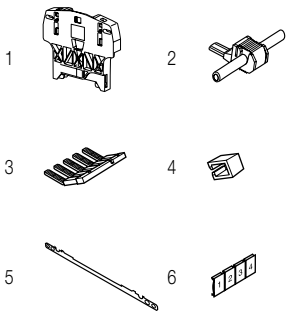

Accessories

	Description			Color	Type	Part Number		Pkg pce	Weight (1 pce) g
1	**End stops**	10 mm	0.394 in	Dark grey	BAZH1	1SNK900102R0000		20	24.00
2	**Jumper bars**	1 poles	24 A	Grey	AD2.5	1SNA114205R2000		50	1.60
3	**Lateral jumper bars**	2 poles	35 A	Grey	PC6-2	1SNA113546R1400		10	2.00
		3 poles			PC6-3	1SNA116536R0500		10	2.00
		4 poles			PC6-4	1SNA116537R0600		10	3.00
		10 poles			PC6-10	1SNA113548R2600		10	8.00
4	**Insulating tips**	For lateral jumper bars type PC...			EIP	1SNA113550R2400		10	
5	**Shield connectors**				CBD2S	1SNA178408R1400		50	
6	**Terminal block markers**	Blank card		White	RC610	1SNA233000R0100		1	7.50

Complete list of accessories is indicated in the terminal block datasheet.
Some accessories such as jumper bars may modify the terminal block's ratings: complete information in the accessories catalogue pages.

Technical data valid for copper conductors only.

M4/6.D2.S1R screw clamp terminal blocks

Disconnect with pull lever - change over type with 3 test sockets 6 mm 0.236 in spacing

4 mm²
10 AWG

M4/6.D2.S1R

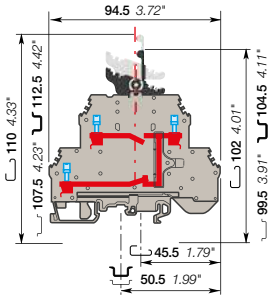

6 mm 0.236 in spacing

Description

- Direct a signal either to the upper deck (contact control pull lever in high position), or to the lower deck (pull lever in low position) with just one operation,
- Ease your test operations with the built-in test sockets,
- Closed terminal block: no end section needed.

Ordering details

Description		Color	Type	Part Number		Pkg pce	Weight (1 pce) g
Disconnect	Change over type with 3 test sockets DIA 2 mm 0.079 in	Grey, black	M4/6.D2.S1R.T	1SNA199456R2100		25	30.00

Main technical data

		IEC	UL	CSA
1 conductor per clamp	Rigid: Solid/Stranded	0.2-4 mm²		24-10 AWG
	Flexible without ferrule	0.2-4 mm²		
	Flexible with insulated ferrule			
	Gauge	A4		
Rated current / Rated cross section		12 A / 1 mm²		10 A / 10 AWG
Rated short-time withstand current (1s)		120 A		
Rated voltage		500 V		300 V
Impulse withstand voltage		6000 V		
Protection		IP20	NEMA 1	

Mounting instructions

Rail	G32, TH 35-7.5, TH 35-15
Wire stripping length	9.5 mm 0.374 in
Tool	Flat screwdriver Ø 4 mm Ø 0.157 in
Torque	0.5 - 0.6 Nm 4.4 - 5.3 lb.in

The connecting capacity data for one Rigid: Solid/Stranded, or one Flexible conductor (when applicable) is a mandatory information required by IEC, UL and CSA standards (Copper conductors). All other data are provided as supplementary information only. For more details, please consult our CB, UL or CSA certificates and technical datasheet available on http://www.TE.com

CE RoHS cCSAus Gost R

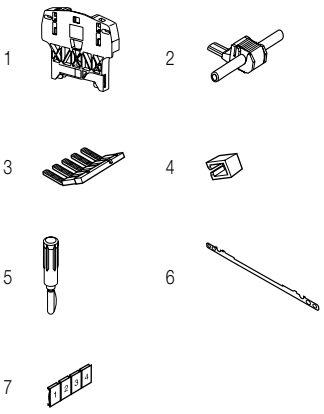

Accessories

	Description			Color	Type	Part Number		Pkg pce	Weight (1 pce) g
1	**End stops**	10 mm	0.394 in	Dark grey	BAZH1	1SNK900102R0000		20	24.00
2	**Jumper bars**	1 poles	24 A	Grey	AD2.5	1SNA114205R2000		50	1.60
3	**Lateral jumper bars**	2 poles	35 A	Grey	PC6-2	1SNA113546R1400		10	2.00
		3 poles			PC6-3	1SNA116536R0500		10	2.00
		4 poles			PC6-4	1SNA116537R0600		10	3.00
		10 poles			PC6-10	1SNA113548R2600		10	8.00
4	**Insulating tips**	For lateral jumper bars type PC...			EIP	1SNA113550R2400		10	
5	**Test plugs**	DIA 2 mm 0.079 in		Black	FC2	1SNA007865R2600		100	
6	**Shield connectors**				CBD2S	1SNA178408R1400		50	
7	**Terminal block markers**	Blank card		White	RC610	1SNA233000R0100		1	7.50

Complete list of accessories is indicated in the terminal block datasheet.
Some accessories such as jumper bars may modify the terminal block's ratings: complete information in the accessories catalogue pages.

Technical data valid for copper conductors only.

1SNC160105S0201

Overview			252

Screw clamp technology

Component holder

4 mm² / 12 AWG	**M4/6.DE1.D**	With 2 diodes	253
	M4/6.DE1.D1	With 2 diodes	254
	M4/6.DE2.D	With 2 diodes	255
	M4/6.DD	With 1 diode	256
	M4/6.DD1	With 1 diode	257
	M4/6.DE	Open circuit	258
	M4/6.DE1	Open circuit	259
	M4/6.DE2	Open circuit	260

For 5 x 20 mm and 5 x 25 mm fuses

4 mm² / 12 AWG	**D4/8.D2.P.SF**		261
	D4/8.D2.P.SFL		262
	D4/8.D2.P.SFD		262

ADO-ADO technology

Component holder

1.5 mm²	**D1.5/6.ADO.D1**	With diode	263

1SNC160105S0201

13

Screw clamp technology

Component holder

Section IEC	UL/CSA								
4 mm²	12 AWG	M4/6.DE1.D 6 mm 0.236 in	M4/6.DE1.D1 6 mm 0.236 in	M4/6.DE2.D 6 mm 0.236 in	M4/6.DD 6 mm 0.236 in	M4/6.DD1 6 mm 0.236 in	M4/6.DE 6 mm 0.236 in	M4/6.DE1 6 mm 0.236 in	M4/6.DE2 6 mm 0.236 in

For 5 x 20 mm and 5 x 25 mm fuses

Section IEC	UL/CSA		
4 mm²	12 AWG	D4/8.D2.P.SF 8 mm 0.315 in	D4/8.D2.P.SFL 8 mm 0.315 in
			D4/8.D2.P.SFD 8 mm 0.315 in

ADO-ADO technology

Component holder

Section IEC	UL/CSA	
1.5 mm²		D1.5/6.ADO.D1 6 mm 0.236 in

1SNC160062S0201

M4/6.DE screw clamp terminal blocks
Component holder - 6 mm 0.236 in spacing

4 mm²

M4/6.DE

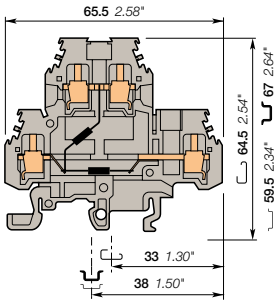

6 mm 0.236 in spacing

Description

Ease the test operation with two 1N4007 diodes.

Ordering details

Description		Color	Type	Part Number		Pkg pce	Weight (1 pce) g
Component holder	With two 1N4007 diodes, common on cathode (1000V peak-250V Service-1A)	Grey	M4/6.DE1.D	1SNA115371R2600		50	16.00

Main technical data

		IEC	UL	CSA
1 conductor per clamp	Rigid: Solid/Stranded	0.5-4 mm²		
	Flexible without ferrule	0.5-4 mm²		
	Flexible with insulated ferrule			
	Gauge	A4		
Rated current / Rated cross section		20 A / 4 mm²		
Rated short-time withstand current (1s)		480 A		
Rated voltage		500 V		
Impulse withstand voltage				
Protection		IP20	NEMA 1	

Mounting instructions

Rail	G32, TH 35-7.5, TH 35-15
Wire stripping length	8.5 mm 0.33 in
Tool	Flat screwdriver Ø 4 mm Ø 0.157 in
Torque	0.5 - 0.6 Nm 4.4 - 5.3 lb.in

The connecting capacity data for one Rigid: Solid/Stranded, or one Flexible conductor (when applicable) is a mandatory information required by IEC, UL and CSA standards (Copper conductors). All other data are provided as supplementary information only. For more details, please consult our CB, UL or CSA certificates and technical datasheet available on http://www.TE.com

CE RoHS Gost R

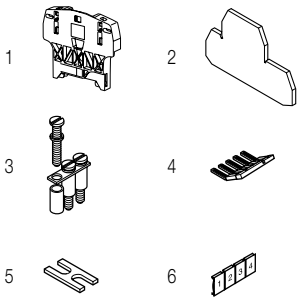

Accessories

	Description			Color	Type	Part Number		Pkg pce	Weight (1 pce) g
1	**End stops**	10 mm	0.394 in	Dark grey	BAZH1	1SNK900102R0000		20	24.00
2	**End sections**	1 mm	0.039 in	Grey	FEM6D	1SNA118499R2300		20	2.70
3	**Jumper bars**	2 poles	32 A		BJMI6D-2	1SNA179668R2000		10	4.00
		3 poles			BJMI6D-3	1SNA179669R2100		10	6.00
		4 poles			BJMI6D-4	1SNA179670R2600		10	8.00
		5 poles			BJMI6D-5	1SNA179671R1300		10	10.00
		10 poles			BJMI6D-10	1SNA179672R1400		10	20.00
4	**Lateral jumper bars**	10 poles	35 A		PC61-10	1SNA163311R2200		10	5.00
5	**Cross spacing jumpers**	5 mm 0.200 in - 6 mm 0.236 in - 8 mm 0.315 in			EL6	1SNA173627R2100		10	0.10
6	**Terminal block markers**	Blank card		White	RC610	1SNA233000R0100		1	7.50

Complete list of accessories is indicated in the terminal block datasheet.
Some accessories such as jumper bars may modify the terminal block's ratings: complete information in the accessories catalogue pages.

Technical data valid for copper conductors only.

M4/6.DE screw clamp terminal blocks
Component holder - 6 mm 0.236 in spacing

4 mm²

M4/6.DE

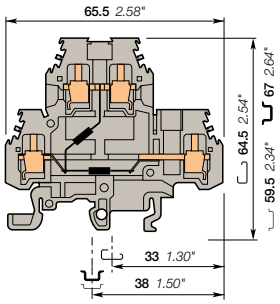

6 mm 0.236 in spacing

Description

Ease the test operation with two 1N4007 diodes.

Ordering details

Description		Color	Type	Part Number		Pkg pce	Weight (1 pce) g
Component holder	With two 1N4007 diodes, common on anode (1000V peak-250V Service-1A)	Grey	M4/6.DE1.D1	1SNA115591R0400		50	16.00

Main technical data

		IEC	UL	CSA
1 conductor per clamp	Rigid: Solid/Stranded	0.5-4 mm²		
	Flexible without ferrule	0.5-4 mm²		
	Flexible with insulated ferrule			
	Gauge	A4		
Rated current / Rated cross section		20 A / 4 mm²		
Rated short-time withstand current (1s)		480 A		
Rated voltage		500 V		
Impulse withstand voltage				
Protection		IP20	NEMA 1	

Mounting instructions

Rail	G32, TH 35-7.5, TH 35-15
Wire stripping length	8.5 mm 0.33 in
Tool	Flat screwdriver Ø 4 mm Ø 0.157 in
Torque	0.5 - 0.6 Nm 4.4 - 5.3 lb.in

The connecting capacity data for one Rigid: Solid/Stranded, or one Flexible conductor (when applicable) is a mandatory information required by IEC, UL and CSA standards (Copper conductors). All other data are provided as supplementary information only. For more details, please consult our CB, UL or CSA certificates and technical datasheet available on http://www.TE.com

CE RoHS Gost R

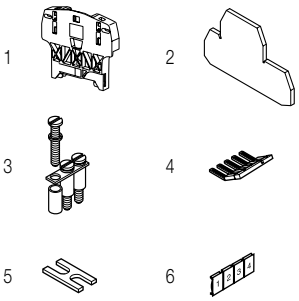

Accessories

	Description			Color	Type	Part Number		Pkg pce	Weight (1 pce) g
1	**End stops**	10 mm	0.394 in	Dark grey	BAZH1	1SNK900102R0000		20	24.00
2	**End sections**	1 mm	0.039 in	Grey	FEM6D	1SNA118499R2300		20	2.70
3	**Jumper bars**	2 poles	32 A		BJMI6D-2	1SNA179668R2000		10	4.00
		3 poles			BJMI6D-3	1SNA179669R2100		10	6.00
		4 poles			BJMI6D-4	1SNA179670R2600		10	8.00
		5 poles			BJMI6D-5	1SNA179671R1300		10	10.00
		10 poles			BJMI6D-10	1SNA179672R1400		10	20.00
4	**Lateral jumper bars**	10 poles	35 A		PC61-10	1SNA163311R2200		10	5.00
5	**Cross spacing jumpers**	5 mm 0.200 in - 6 mm 0.236 in - 8 mm 0.315 in			EL6	1SNA173627R2100		10	0.10
6	**Terminal block markers**	Blank card		White	RC610	1SNA233000R0100		1	7.50

Complete list of accessories is indicated in the terminal block datasheet.
Some accessories such as jumper bars may modify the terminal block's ratings: complete information in the accessories catalogue pages.

Technical data valid for copper conductors only.

M4/6.DE screw clamp terminal blocks
Component holder - 6 mm 0.236 in spacing

4 mm²

M4/6.DE

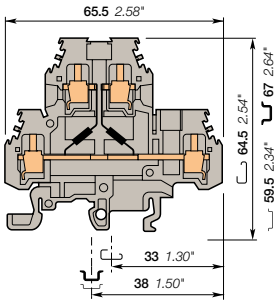

6 mm 0.236 in spacing

Description

Ease the test operation with two 1N4007 diodes.

Ordering details

Description		Color	Type	Part Number		Pkg pce	Weight (1 pce) g
Component holder	With two 1N4007 diodes, common on cathode (1000V peak-250V Service-1A)	Grey	M4/6.DE2.D	1SNA115327R1200		50	20.00

Main technical data

		IEC	UL	CSA
1 conductor per clamp	Rigid: Solid/Stranded	0.5-4 mm²		
	Flexible without ferrule	0.5-4 mm²		
	Flexible with insulated ferrule			
	Gauge	A4		
Rated current / Rated cross section		20 A / 4 mm²		
Rated short-time withstand current (1s)		480 A		
Rated voltage		500 V		
Impulse withstand voltage				
Protection		IP20	NEMA 1	

Mounting instructions

Rail	G32, TH 35-7.5, TH 35-15
Wire stripping length	8.5 mm 0.33 in
Tool	Flat screwdriver Ø 4 mm Ø 0.157 in
Torque	0.5 - 0.6 Nm 4.4 - 5.3 lb.in

The connecting capacity data for one Rigid: Solid/Stranded, or one Flexible conductor (when applicable) is a mandatory information required by IEC, UL and CSA standards (Copper conductors). All other data are provided as supplementary information only. For more details, please consult our CB, UL or CSA certificates and technical datasheet available on http://www.TE.com

CE RoHS Gost R

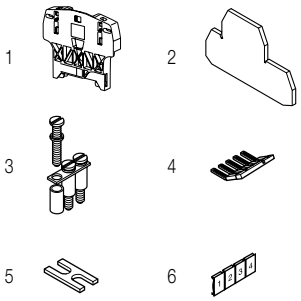

Accessories

	Description			Color	Type	Part Number		Pkg pce	Weight (1 pce) g
1	**End stops**	10 mm	0.394 in	Dark grey	BAZH1	1SNK900102R0000		20	24.00
2	**End sections**	1 mm	0.039 in	Grey	FEM6D	1SNA118499R2300		20	2.70
3	**Jumper bars**	2 poles	32 A		BJMI6D-2	1SNA179668R2000		10	4.00
		3 poles			BJMI6D-3	1SNA179669R2100		10	6.00
		4 poles			BJMI6D-4	1SNA179670R2600		10	8.00
		5 poles			BJMI6D-5	1SNA179671R1300		10	10.00
		10 poles			BJMI6D-10	1SNA179672R1400		10	20.00
4	**Lateral jumper bars**	10 poles	35 A		PC61-10	1SNA163311R2200		10	5.00
5	**Cross spacing jumpers**	5 mm 0.200 in - 6 mm 0.236 in - 8 mm 0.315 in			EL6	1SNA173627R2100		10	0.10
6	**Terminal block markers**	Blank card		White	RC610	1SNA233000R0100		1	7.50

Complete list of accessories is indicated in the terminal block datasheet.
Some accessories such as jumper bars may modify the terminal block's ratings: complete information in the accessories catalogue pages.

Technical data valid for copper conductors only.

M4/6.DD screw clamp terminal blocks
Component holder - 6 mm 0.236 in spacing

4 mm²
12 AWG

M4/6.DD

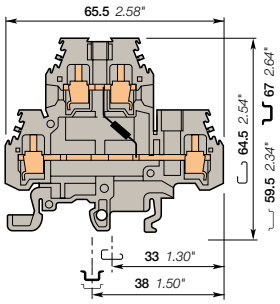

6 mm 0.236 in spacing

Description

Protect or test your circuit with one 1N4007 diodes.

Ordering details

Description		Color	Type	Part Number		Pkg pce	Weight (1 pce) g
Component holder	Cathode of the blocking diode connected to the lower circuit	Grey	M4/6.DD	1SNA115168R2300		50	20.00

Main technical data

		IEC	UL	CSA
1 conductor per clamp	Rigid: Solid/Stranded	0.2-4 mm²	22-12 AWG	18-12 AWG
	Flexible without ferrule	0.22-4 mm²		
	Flexible with insulated ferrule			
	Gauge			
Rated current / Rated cross section		20 A / 4 mm²	25 A / 12 AWG	25 A / 12 AWG
Rated short-time withstand current (1s)		480 A		
Rated voltage		500 V	600 V	150 V
Impulse withstand voltage				
Protection		IP20	NEMA 1	

Mounting instructions

Rail	G32, TH 35-7.5, TH 35-15
Wire stripping length	8.5 mm 0.33 in
Tool	Flat screwdriver Ø 4 mm Ø 0.157 in
Torque	0.5 - 0.6 Nm 4.4 - 5.3 lb.in

The connecting capacity data for one Rigid: Solid/Stranded, or one Flexible conductor (when applicable) is a mandatory information required by IEC, UL and CSA standards (Copper conductors). All other data are provided as supplementary information only. For more details, please consult our CB, UL or CSA certificates and technical datasheet available on http://www.TE.com

CE RoHS USR CSA Gost R

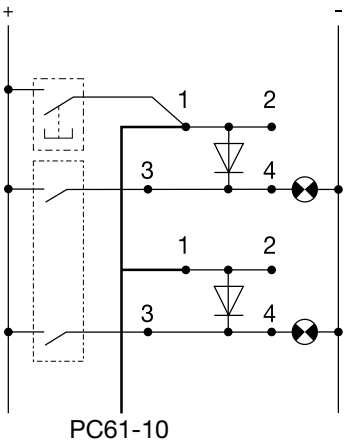

Typical lamp test application

Accessories

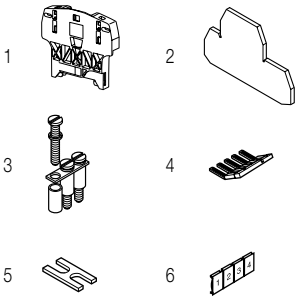

	Description			Color	Type	Part Number		Pkg pce	Weight (1 pce) g
1	**End stops**	10 mm	0.394 in	Dark grey	BAZH1	1SNK900102R0000		20	24.00
2	**End sections**	1 mm	0.039 in	Grey	FEM6D	1SNA118499R2300		20	2.70
3	**Jumper bars**	2 poles	32 A		BJMI6D-2	1SNA179668R2000		10	4.00
		3 poles			BJMI6D-3	1SNA179669R2100		10	6.00
		4 poles			BJMI6D-4	1SNA179670R2600		10	8.00
		5 poles			BJMI6D-5	1SNA179671R1300		10	10.00
		10 poles			BJMI6D-10	1SNA179672R1400		10	20.00
4	**Lateral jumper bars**	10 poles	35 A		PC61-10	1SNA163311R2200		10	5.00
5	**Cross spacing jumpers**	5 mm 0.200 in - 6 mm 0.236 in - 8 mm 0.315 in			EL6	1SNA173627R2100		10	0.10
6	**Terminal block markers**	Blank card		White	RC610	1SNA233000R0100		1	7.50

Complete list of accessories is indicated in the terminal block datasheet.
Some accessories such as jumper bars may modify the terminal block's ratings: complete information in the accessories catalogue pages.

Technical data valid for copper conductors only.

1SNC161133S0201 - Rev. A

M4/6.DD screw clamp terminal blocks
Component holder - 6 mm 0.236 in spacing

4 mm²
12 AWG

M4/6.DD

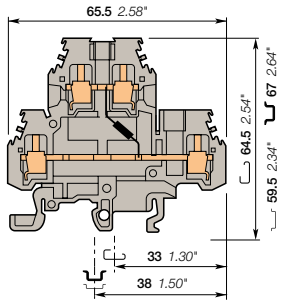

6 mm 0.236 in spacing

Description

Protect or test your circuit with one 1N4007 diodes.

Ordering details

Description		Color	Type	Part Number		Pkg pce	Weight (1 pce) g
Component holder	Cathode of the blocking diode connected to the upper circuit	Grey	M4/6.DD1	1SNA115184R0400		50	20.00

Main technical data

		IEC	UL	CSA
1 conductor per clamp	Rigid: Solid/Stranded	0.2-4 mm²	22-12 AWG	18-12 AWG
	Flexible without ferrule	0.22-4 mm²		
	Flexible with insulated ferrule			
	Gauge			
Rated current / Rated cross section		20 A / 4 mm²	25 A / 12 AWG	25 A / 12 AWG
Rated short-time withstand current (1s)		480 A		
Rated voltage		500 V	600 V	150 V
Impulse withstand voltage				
Protection		IP20	NEMA 1	

Mounting instructions

Rail	G32, TH 35-7.5, TH 35-15
Wire stripping length	8.5 mm 0.33 in
Tool	Flat screwdriver Ø 4 mm Ø 0.157 in
Torque	0.5 - 0.6 Nm 4.4 - 5.3 lb.in

The connecting capacity data for one Rigid: Solid/Stranded, or one Flexible conductor (when applicable) is a mandatory information required by IEC, UL and CSA standards (Copper conductors). All other data are provided as supplementary information only. For more details, please consult our CB, UL or CSA certificates and technical datasheet available on http://www.TE.com

CE RoHS USR CSA Gost R

Typical lamp test application

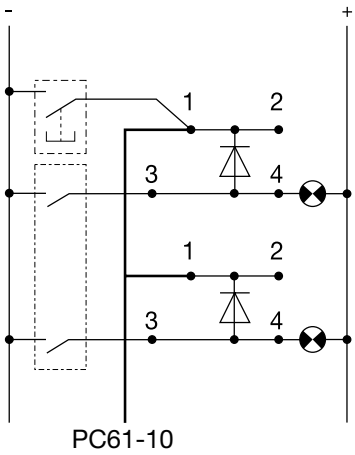

Accessories

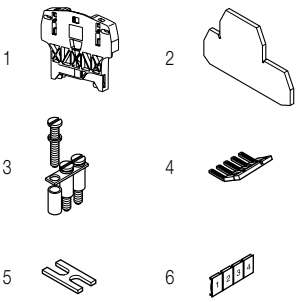

	Description			Color	Type	Part Number		Pkg pce	Weight (1 pce) g
1	**End stops**	10 mm	0.394 in	Dark grey	BAZH1	1SNK900102R0000		20	24.00
2	**End sections**	1 mm	0.039 in	Grey	FEM6D	1SNA118499R2300		20	2.70
3	**Jumper bars**	2 poles	32 A		BJMI6D-2	1SNA179668R2000		10	4.00
		3 poles			BJMI6D-3	1SNA179669R2100		10	6.00
		4 poles			BJMI6D-4	1SNA179670R2600		10	8.00
		5 poles			BJMI6D-5	1SNA179671R1300		10	10.00
		10 poles			BJMI6D-10	1SNA179672R1400		10	20.00
4	**Lateral jumper bars**	10 poles	35 A		PC61-10	1SNA163311R2200		10	5.00
5	**Cross spacing jumpers**	5 mm 0.200 in - 6 mm 0.236 in - 8 mm 0.315 in			EL6	1SNA173627R2100		10	0.10
6	**Terminal block markers**	Blank card		White	RC610	1SNA233000R0100		1	7.50

Complete list of accessories is indicated in the terminal block datasheet.
Some accessories such as jumper bars may modify the terminal block's ratings: complete information in the accessories catalogue pages.

Technical data valid for copper conductors only.

M4/6.DE screw clamp terminal blocks
Component holder - 6 mm 0.236 in spacing

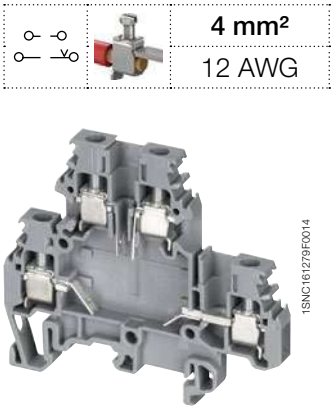

M4/6.DE

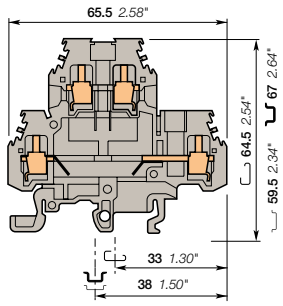

6 mm 0.236 in spacing

	4 mm²
	12 AWG

Description

Customize yourself the double deck terminal blocks by soldering electronic components (thickness 5 mm 0.200 in max).

Ordering details

Description	Color	Type	Part Number		Pkg pce	Weight (1 pce) g
Component holder Upper and lower circuit opened	Grey	M4/6.DE	1SNA115185R0500		50	20.00

Main technical data

		IEC	UL	CSA
1 conductor per clamp	Rigid: Solid/Stranded	0.5-4 mm²	22-12 AWG	22-12 AWG
	Flexible without ferrule	0.5-4 mm²		
	Flexible with insulated ferrule			
	Gauge	A4		
Rated current / Rated cross section		26 A / 4 mm²	20 A / 12 AWG	20 A / 12 AWG
Rated short-time withstand current (1s)		480 A		
Rated voltage		500 V	600 V	300 V
Impulse withstand voltage				
Protection		IP20	NEMA 1	

Mounting instructions

Rail	G32, TH 35-7.5, TH 35-15
Wire stripping length	8.5 mm 0.33 in
Tool	Flat screwdriver Ø 4 mm Ø 0.157 in
Torque	0.5 - 0.6 Nm 4.4 - 5.3 lb.in

The connecting capacity data for one Rigid: Solid/Stranded, or one Flexible conductor (when applicable) is a mandatory information required by IEC, UL and CSA standards (Copper conductors). All other data are provided as supplementary information only. For more details, please consult our CB, UL or CSA certificates and technical datasheet available on http://www.TE.com

CE RoHS USR CSA Gost R

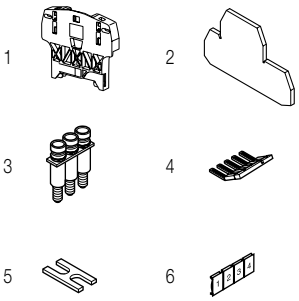

Accessories

	Description			Color	Type	Part Number		Pkg pce	Weight (1 pce) g
1	**End stops**	10 mm	0.394 in	Dark grey	BAZH1	1SNK900102R0000		20	24.00
2	**End sections**	1 mm	0.039 in	Grey	FEM6D	1SNA118499R2300		20	2.70
3	**Jumper bars**	2 poles	32 A		BJMI6D-2	1SNA179668R2000		10	4.00
		3 poles			BJMI6D-3	1SNA179669R2100		10	6.00
		4 poles			BJMI6D-4	1SNA179670R2600		10	8.00
		5 poles			BJMI6D-5	1SNA179671R1300		10	10.00
		10 poles			BJMI6D-10	1SNA179672R1400		10	20.00
4	**Lateral jumper bars**	10 poles	35 A		PC61-10	1SNA163311R2200		10	5.00
5	**Cross spacing jumpers**	5 mm 0.200 in - 6 mm 0.236 in - 8 mm 0.315 in			EL6	1SNA173627R2100		10	0.10
6	**Terminal block markers**	Blank card		White	RC610	1SNA233000R0100		1	7.50

Complete list of accessories is indicated in the terminal block datasheet.
Some accessories such as jumper bars may modify the terminal block's ratings: complete information in the accessories catalogue pages.

Technical data valid for copper conductors only.

M4/6.DE screw clamp terminal blocks
Component holder - 6 mm 0.236 in spacing

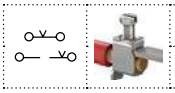

4 mm²
12 AWG

M4/6.DE

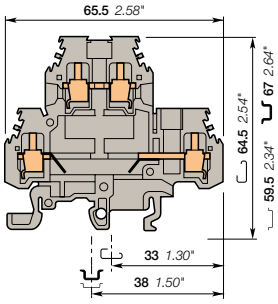

6 mm 0.236 in spacing

Description

Customize yourself the double deck terminal blocks by soldering electronic components (thickness 5 mm 0.200 in max).

Ordering details

Description	Color	Type	Part Number		Pkg pce	Weight (1 pce) g
Component holder Lower circuit opened	Grey	M4/6.DE1	1SNA115177R1400		50	20.00

Main technical data

		IEC	UL	CSA
1 conductor per clamp	Rigid: Solid/Stranded	0.5-4 mm²	22-12 AWG	22-12 AWG
	Flexible without ferrule	0.5-4 mm²		
	Flexible with insulated ferrule			
	Gauge	A4		
Rated current / Rated cross section		26 A / 4 mm²	20 A / 12 AWG	20 A / 12 AWG
Rated short-time withstand current (1s)		480 A		
Rated voltage		500 V	600 V	300 V
Impulse withstand voltage				
Protection		IP20	NEMA 1	

The connecting capacity data for one Rigid: Solid/Stranded, or one Flexible conductor (when applicable) is a mandatory information required by IEC, UL and CSA standards (Copper conductors). All other data are provided as supplementary information only. For more details, please consult our CB, UL or CSA certificates and technical datasheet available on http://www.TE.com

CE RoHS USR CSA Gost R

Mounting instructions

Rail	G32, TH 35-7.5, TH 35-15
Wire stripping length	8.5 mm 0.33 in
Tool	Flat screwdriver Ø 4 mm Ø 0.157 in
Torque	0.5 - 0.6 Nm 4.4 - 5.3 lb.in

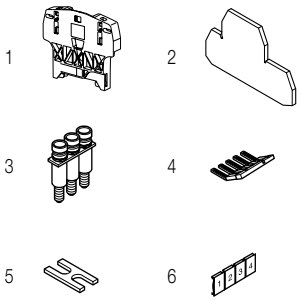

Accessories

	Description			Color	Type	Part Number		Pkg pce	Weight (1 pce) g
1	**End stops**	10 mm	0.394 in	Dark grey	BAZH1	1SNK900102R0000		20	24.00
2	**End sections**	1 mm	0.039 in	Grey	FEM6D	1SNA118499R2300		20	2.70
3	**Jumper bars**	6 mm	32 A		BJMI6D-2	1SNA179668R2000		10	4.00
					BJMI6D-3	1SNA179669R2100		10	6.00
					BJMI6D-4	1SNA179670R2600		10	8.00
					BJMI6D-5	1SNA179671R1300		10	10.00
					BJMI6D-10	1SNA179672R1400		10	20.00
4	**Lateral jumper bars**	10 poles	35 A		PC61-10	1SNA163311R2200		10	5.00
5	**Cross spacing jumpers**	5 mm 0.200 in - 6 mm 0.236 in - 8 mm 0.315 in			EL6	1SNA173627R2100		10	0.10
6	**Terminal block markers** Blank card			White	RC610	1SNA233000R0100		1	7.50

Complete list of accessories is indicated in the terminal block datasheet.
Some accessories such as jumper bars may modify the terminal block's ratings: complete information in the accessories catalogue pages.

Technical data valid for copper conductors only.

M4/6.DE screw clamp terminal blocks
Component holder - 6 mm 0.236 in spacing

4 mm²
12 AWG

M4/6.DE

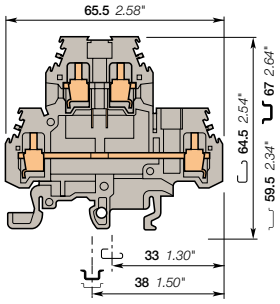

6 mm 0.236 in spacing

Description

Customize yourself the double deck terminal blocks by soldering electronic components (thickness 5 mm 0.200 in max).

Ordering details

Description	Color	Type	Part Number		Pkg pce	Weight (1 pce) g
Component holder Upper circuit opened	Grey	M4/6.DE2	1SNA115326R1100		50	20.00

Main technical data

		IEC	UL	CSA
1 conductor per clamp	Rigid: Solid/Stranded	0.5-4 mm²		22-12 AWG
	Flexible without ferrule	0.5-4 mm²		
	Flexible with insulated ferrule			
	Gauge	A4		
Rated current / Rated cross section		26 A / 4 mm²		20 A / 12 AWG
Rated short-time withstand current (1s)		480 A		
Rated voltage		500 V		300 V
Impulse withstand voltage				
Protection		IP20	NEMA 1	

Mounting instructions

Rail	G32, TH 35-7.5, TH 35-15
Wire stripping length	8.5 mm 0.33 in
Tool	Flat screwdriver Ø 4 mm Ø 0.157 in
Torque	0.5 - 0.6 Nm 4.4 - 5.3 lb.in

The connecting capacity data for one Rigid: Solid/Stranded, or one Flexible conductor (when applicable) is a mandatory information required by IEC, UL and CSA standards (Copper conductors). All other data are provided as supplementary information only. For more details, please consult our CB, UL or CSA certificates and technical datasheet available on http://www.TE.com

CE | RoHS | CSA | Gost R

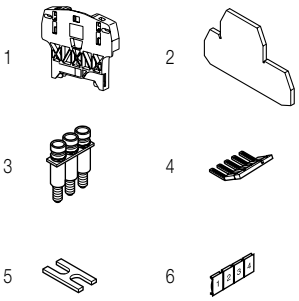

Accessories

	Description			Color	Type	Part Number		Pkg pce	Weight (1 pce) g
1	**End stops**	10 mm	0.394 in	Dark grey	BAZH1	1SNK900102R0000		20	24.00
2	**End sections**	1 mm	0.039 in	Grey	FEM6D	1SNA118499R2300		20	2.70
3	**Jumper bars**	2 poles	32 A		BJMI6D-2	1SNA179668R2000		10	4.00
		3 poles			BJMI6D-3	1SNA179669R2100		10	6.00
		4 poles			BJMI6D-4	1SNA179670R2600		10	8.00
		5 poles			BJMI6D-5	1SNA179671R1300		10	10.00
		10 poles			BJMI6D-10	1SNA179672R1400		10	20.00
4	**Lateral jumper bars**	10 poles	35 A		PC61-10	1SNA163311R2200		10	5.00
5	**Cross spacing jumpers**	5 mm 0.200 in - 6 mm 0.236 in - 8 mm 0.315 in			EL6	1SNA173627R2100		10	0.10
6	**Terminal block markers**	Blank card		White	RC610	1SNA233000R0100		1	7.50

Complete list of accessories is indicated in the terminal block datasheet.
Some accessories such as jumper bars may modify the terminal block's ratings: complete information in the accessories catalogue pages.

Technical data valid for copper conductors only.

D4/8.D2.P.SF screw clamp terminal blocks

For 5 x 20 and 5 x 25 fuses - 8 mm 0.315 in spacing

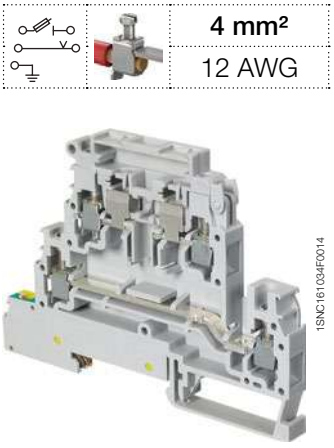

4 mm²	
12 AWG	

1SNC161034F0014

D4/8.D2.P.SF

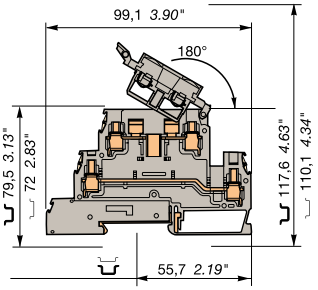

8 mm 0.315 in spacing

Description

- Protect your circuits with 5 x 20 and 5 x 25 fuse terminal blocks (fuse not supplied with terminal blocks),
- Save space with double deck terminal blocks: 2 independent circuits 1 fuse on upper deck + 1 feed-through + 1 ground.

Ordering details

Description	Color	Type	Part Number		Pkg qty	Weight (1 pce) g
Fuse	Grey	D4/8.D2.P.SF	1SNA400270R2000		25	35.00

Main technical data

Connecting capacity		IEC	UL	CSA
1 conductor per clamp	Rigid: Solid/Stranded	0.5-6 mm²	20-12 AWG	20-12 AWG
	Flexible without ferrule	0.5-4 mm²		
	Flexible with insulated ferrule			
	Gauge	A4		
Rated current / Rated cross section		6.3 A / 4 mm²	6.3 A / 12 AWG	6.3 A / 12 AWG
Rated short-time withstand current (1s)				
Rated voltage		300 V	300 V	300 V
Impulse withstand voltage		6000 V		
Protection		IP20	NEMA 1	

Mounting instructions

Rail	TH 35-7.5, TH 35-15
Wire stripping length	9.5 mm 0.37 in
Tool	Flat screwdriver Ø 4 mm Ø 0.157 in
Torque	0.5 - 0.8 N.m 4.4 - 7.1 lb.in

The connecting capacity data for one Rigid: Solid/Stranded, or one Flexible conductor (when applicable) is a mandatory information required by IEC, UL and CSA standards (Copper conductors). All other data are provided as supplementary information only. For more details, please consult our CB, UL or CSA certificates and technical datasheet available on http://www.TE.com

CE RoHS USR CSA Gost R

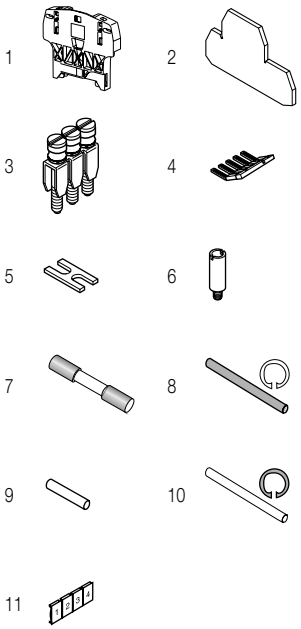

Accessories

	Description			Color	Type	Part Number		Pkg qty	Weight (1 pce) g
1	End stops	10 mm	0.394 in	Dark grey	BAZH1	1SNK900102R0000		20	24.00
2	End sections	1.5 mm	0.059 in	Grey	FEM8D2S1	1SNA400273R1700		20	4.60
3	Jumper bars	2 poles	41 A		BJM8	1SNA168520R0500		10	5.00
		3 poles				1SNA168521R2200		10	7.00
		4 poles				1SNA168522R2300		10	9.50
		10 poles				1SNA168974R0000		10	23.70
4	Lateral jumper bars	10 poles	35 A		PC81-10	1SNA173523R1100		10	5.00
5	Cross spacing jumpers	5 mm 0.200 in - 6 mm 0.236 in - 8 mm 0.315 in			EL6	1SNA173627R2100		10	0.10
6	Test sockets	DIA 2 mm 0.079 in			AL2	1SNA163043R2100		50	0.90
		DIA 4 mm 0.157 in			AL4-M3	1SNA206721R0100		50	1.10
7	Fuses	0.5 A			FU520	1SNA008288R1500		10	
		1 A				1SNA008290R1300		10	
		2 A				1SNA008291R0000		10	
8	Assembly rods	2 poles			TGA8	1SNA168672R1100		10	1.00
		3 poles				1SNA168673R1200		10	
		4 poles				1SNA168674R1300		10	
9	Neutral cartridges				CN5	1SNA179371R1600		10	3.90
10	Spring retaining rings				ANT	1SNA168675R1400		10	
11	Terminal block markers	Blank card		White	RC810	1SNA234000R0200		1	8.20

Complete list of accessories is indicated in the terminal block datasheet.
Some accessories such as jumper bars may modify the terminal block's ratings: complete information in the accessories catalogue pages.

Technical data valid for copper conductors only.

D4/8.D2.P.SF screw clamp terminal blocks

For 5 x 20 and 5 x 25 fuses - with blown fuse indicator - 8 mm 0.315 in spacing

4 mm²
12 AWG

D4/8.D2.P.SF

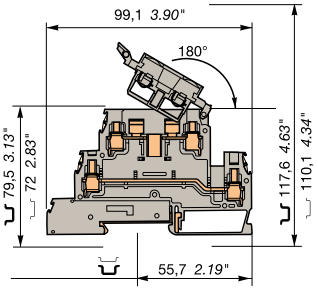

8 mm 0.315 in spacing

Description

- Protect your circuits with 5 x 20 and 5 x 25 fuse terminal blocks (fuse not supplied with terminal blocks),
- Save space with double deck terminal blocks: 2 independent circuits 1 fuse on upper deck + 1 feed-through + 1 ground,
- Quickly identify the defective circuit thanks to the blown fuse indicator.

Ordering details

Description		Color	Type	Part Number		Pkg qty	Weight (1 pce) g
Fuse	With blown fuse indicator by neon 110-230 V AC	Grey	D4/8.D2.P.SFL	1SNA400271R1500		25	35.00
	With blown fuse indicator by LED 24-60 V DC / 110 V AC	Grey	D4/8.D2.P.SFD	1SNA400272R1600		25	35.00

Main technical data

Connecting capacity		IEC	UL	CSA
1 conductor per clamp	Rigid: Solid/Stranded	0.5-6 mm²	20-12 AWG	20-12 AWG
	Flexible without ferrule	0.5-4 mm²		
	Flexible with insulated ferrule			
	Gauge	A4		
Rated current / Rated cross section		6.3 A / 4 mm²	6.3 A / 12 AWG	6.3 A / 12 AWG
Rated short-time withstand current (1s)				
Rated voltage		300 V	300 V	300 V
Impulse withstand voltage		6000 V		
Protection		IP20	NEMA 1	

Mounting instructions

Rail		TH 35-7.5, TH 35-15
Wire stripping length		9.5 mm 0.37 in
Tool		Flat screwdriver Ø 4 mm Ø 0.157 in
Torque		0.5 - 0.8 N.m 4.4 - 7.1 lb.in

The connecting capacity data for one Rigid: Solid/Stranded, or one Flexible conductor (when applicable) is a mandatory information required by IEC, UL and CSA standards (Copper conductors). All other data are provided as supplementary information only. For more details, please consult our CB, UL or CSA certificates and technical datasheet available on http://www.TE.com

CE RoHS USR CSA Gost R

Notes

Blocks with LED indicator are labeled "+" on the outside of the lever. The indicator can be reversed in the field if required.
Leakage current D4/8.D2.P.SFL: 110 V: < 0.5 mA / 230 V: < 0.7 mA
Leakage current D4/8.D2.P.SFD: 24 V: < 0.5 mA / 110 V: < 2.2 mA

Accessories

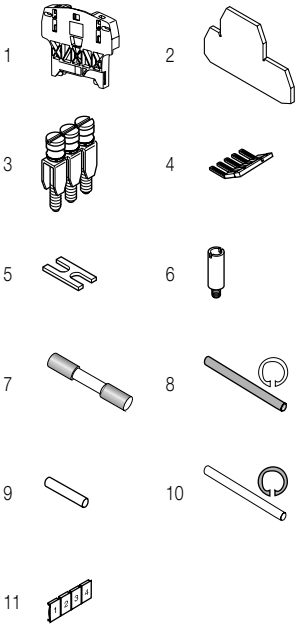

	Description			Color	Type	Part Number		Pkg qty	Weight (1 pce) g
1	**End stops**	12 mm	0.472 in	Grey	BAZH1	1SNK900102R0000		50	24.00
2	**End sections**	1.5 mm	0.059 in	Grey	FEM8D2S1	1SNA400273R1700		20	4.60
3	**Jumper bars**	2 poles	41 A		BJM8	1SNA168520R0500		10	5.00
		3 poles				1SNA168521R2200		10	7.00
		4 poles				1SNA168522R2300		10	9.50
		10 poles				1SNA168974R0000		10	23.70
4	**Lateral jumper bars**	10 poles	35 A		PC81-10	1SNA173523R1100		10	5.00
5	**Cross spacing jumpers**	5 mm 0.200 in - 6 mm 0.236 in - 8 mm 0.315 in			EL6	1SNA173627R2100		10	0.10
6	**Test sockets**	DIA 2 mm 0.079 in			AL2	1SNA163043R2100		50	0.90
		DIA 4 mm 0.157 in			AL4-M3	1SNA206721R0100		50	1.10
7	**Fuses**	0.5 A			FU520	1SNA008288R1500		10	
		1 A				1SNA008290R1300		10	
		2 A				1SNA008291R0000		10	
8	**Assembly rods**	2 poles			TGA8	1SNA168672R1100		10	1.00
		3 poles				1SNA168673R1200		10	
		4 poles				1SNA168674R1300		10	
9	**Neutral cartridges**				CN5	1SNA179371R1600		10	3.90
10	**Spring retaining rings**				ANT	1SNA168675R1400		10	
11	**Terminal block markers**	Blank card		White	RC810	1SNA234000R0200		1	8.20

Complete list of accessories is indicated in the terminal block datasheet.
Some accessories such as jumper bars may modify the terminal block's ratings: complete information in the accessories catalogue pages.

Technical data valid for copper conductors only.

D1.5/6.ADO.D IDC terminal blocks

Component holder ADO-ADO - 6 mm 0.236 in spacing

1.5 mm²

D1.5/6.ADO.D

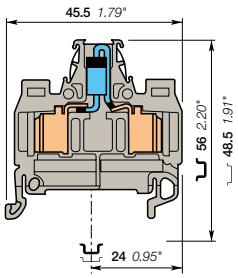

6 mm 0.236 in spacing

Description

- Terminal blocks with built-in 1N5408 diode,
- With the TE Connectivity ADO System®, experience the fastest and most reliable connection on the market,
- Designed for control applications exposed to severe constrains (vibrations, shocks, corrosion etc.),
- Up to 2 wires per connection.

Ordering details

Description		Color	Type	Part Number		Pkg pce	Weight (1 pce) g
Component holder	With diode (cathode on the right)	Grey	D1.5/6.ADO.D1	1SNA199248R1000		50	7.00

Main technical data

		IEC	UL	CSA
ADO	Rigid: Solid/Stranded	0.34-1.5 mm²		
	Flexible without ferrule	0.34-1.5 mm²		
Screw clamp	Rigid: Solid/Stranded			
	Flexible without ferrule			
	Flexible with insulated ferrule			
	Gauge			
Rated current / Rated cross section		1 A / 1.5 mm²		
Rated short-time withstand current (1s)		180 A		
Rated voltage		80 V		
Impulse withstand voltage				
Protection		IP20	NEMA 1	

Mounting instructions

Rail		TH 35-7.5, TH 35-15
Wire stripping length		
Tool		
Torque		

The connecting capacity data for one Rigid: Solid/Stranded, or one Flexible conductor (when applicable) is a mandatory information required by IEC, UL and CSA standards (Copper conductors). All other data are provided as supplementary information only. For more details, please consult our CB, UL or CSA certificates and technical datasheet available on http://www.TE.com

RoHS RoHS Gost R

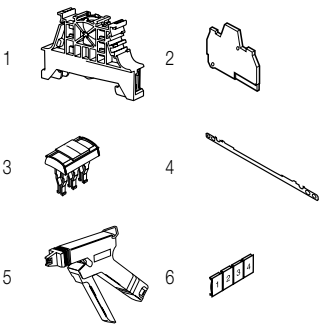

Accessories

	Description			Color	Type	Part Number		Pkg pce	Weight (1 pce) g
1	**End stops**	10 mm	0.394 in	Dark grey	BAM4	1SNK900001R0000		50	14.00
		5.2 mm	0.205 in		BAZ1	1SNK900002R0000		50	5.30
2	**End sections**	3 mm	0.118 in	Grey	FEMAD3	1SNA199341R0500		20	2.50
3	**Jumper bars**	2 poles	17.5 A	Orange	BJADO6-2	1SNA205974R0600		20	1.00
		3 poles			BJADO6-3	1SNA205975R0700		20	1.00
		10 poles			BJADO6-10	1SNA205982R2700		10	6.00
4	**Shield connectors**				CBM5	1SNA178745R1400		50	
5	**Tools**	Semi automatic tool			OUPAD	1SNA178944R0400		1	205.00
		Hand tool			OUMAD	1SNA179466R0600		1	29.00
6	**Terminal block markers**	Blank card		White	RC610	1SNA233000R0100		1	7.50

Complete list of accessories is indicated in the terminal block datasheet.
Some accessories such as jumper bars may modify the terminal block's ratings: complete information in the accessories catalogue pages.

Technical data valid for copper conductors only.

Index

Part number classification

Order code	Type	Page
1SNA007865R2600	FC2	19
1SNA008288R1500	FU520	34
1SNA008289R1600	FU520	34
1SNA008290R1300	FU520	34
1SNA008291R0000	FU520	34
1SNA008292R0100	FU520	34
1SNA094302R2100	CPFT2	176
1SNA094303R2200	CPFT3	176
1SNA094304R2300	CPFT4	176
1SNA094310R2400	CPFT10	176
1SNA094352R2200	CPFTR-2	176
1SNA094353R2300	CPFTR-3	176
1SNA094354R2400	CPFTR-4	176
1SNA094360R0600	CPFTR-10	176
1SNA103189R2600	SCD	214
1SNA103588R2600	SCFT1	167
1SNA103619R0400	SCFEX1	239
1SNA103620R0100	SCFEX3	112
1SNA103672R0100	SCF9	101
1SNA105028R2100	DCB	182
1SNA105141R2700	M8.STP	168
1SNA105142R2000	M8.STP	168
1SNA105265R0300	MS6	112
1SNA107239R0300	FC2.MC	53
1SNA110106R2500	DR1.4	114
1SNA110251R0500	DR6	117
1SNA110264R0200	D6.LNTP1	217
1SNA110269R1700	D6.LNTP3	218
1SNA110327R2100	D6.LNTP2	219
1SNA110328R0200	D6.LNTP4	221
1SNA110331R2500	D6.LNTP6	223
1SNA110332R2600	D6.LNTP7	222
1SNA110333R2700	D6.LNTP8	220
1SNA110368R1200	DR8.SF	121
1SNA110415R1200	D6.A.NTLP	224
1SNA110418R2500	D6.A.LLP	225
1SNA110439R2200	D6.NTLP	213
1SNA110440R0700	D6.NLP	214
1SNA110441R2400	D6.LLP	215
1SNA110442R2500	D6.LL	216
1SNA110491R1700	DR6.1	118
1SNA112086R0200	DR1.5.1	116
1SNA112098R1600	DR2.5.S1	120
1SNA113067R1700	FEM9	101
1SNA113137R0200	FEMT1	167
1SNA113542R1000	PC5-2	17
1SNA113544R1200	PC5-10	17
1SNA113546R1400	PC6-2	18
1SNA113548R2600	PC6-10	18
1SNA113550R2400	EIP	17
1SNA113629R2700	FEMT2	157
1SNA113689R2400	ECP26	84
1SNA113690R2100	ECP31	85
1SNA113691R1600	ECP35	86
1SNA113692R1700	ECP42	87
1SNA113762R2400	PEP	84
1SNA113885R0100	FEMS6	112
1SNA114117R0700	SCFD	213
1SNA114195R0600	FEMS8	113
1SNA114205R2000	AD2.5	66
1SNA114328R2200	FEMT3	165
1SNA114329R2300	BNT2	165
1SNA114434R0500	FEMR10	65
1SNA114522R0500	SCFT2	157
1SNA114778R0500	FEMT4	162
1SNA114825R0500	SCFM6	66
1SNA114836R0000	BAMH	84
1SNA115139R1600	M26.AF	88
1SNA115140R2300	M26.FF	84
1SNA115141R1000	M26.F	92
1SNA115142R1100	M31.AF	89
1SNA115143R1200	M31.FF	85
1SNA115144R1300	M31.F	93
1SNA115145R1400	M35.AF	90
1SNA115146R1500	M35.FF	86
1SNA115147R1600	M35.F	94
1SNA115148R2700	M42.AF	91
1SNA115149R2000	M42.FF	87
1SNA115150R2500	M42.F	95
1SNA115168R2300	M6.DD	256
1SNA115177R1400	M6.DE1	259
1SNA115184R0400	M6.DD1	257
1SNA115185R0500	M6.DE	258
1SNA115201R2500	M9.EE	101
1SNA115206R2200	MTC6	197
1SNA115229R2000	M6.SNTS	66
1SNA115236R1700	M8.ST	157
1SNA115237R1000	M8.ST1	158
1SNA115239R2200	M8.ST3	160
1SNA115243R2600	M8.ST7	157
1SNA115262R2100	M12.FF	102
1SNA115263R2200	M12.FF	102
1SNA115265R2400	MS6	112
1SNA115277R2000	M8.STP	168
1SNA115278R0100	MS8	113
1SNA115313R1400	M6.ST.Sn	165
1SNA115314R1500	M6.ST.Au	165
1SNA115320R2700	M10.RS	65
1SNA115326R1100	M6.DE2	260
1SNA115327R1200	M6.DE2.D	255
1SNA115359R0200	M8.STA	162
1SNA115371R2600	M6.DE1.D	253
1SNA115500R2500	M8.STP3	167
1SNA115510R1600	DR1.5	115
1SNA115511R0300	M12.FF	102
1SNA115529R1500	M8.STP1	167
1SNA115537R0500	D2.6.DL	195
1SNA115539R1700	M10.ST-Sn	166
1SNA115541R1100	D2.6.DA	193
1SNA115542R1200	D2.6.D	194
1SNA115547R1700	D2.6.DAL2	196
1SNA115591R0400	M6.DE1.D1	254
1SNA115626R1600	M13.FF	103
1SNA115627R1700	M13.FF.1	104
1SNA115643R2700	D2.6.DPA1	192
1SNA115678R0200	M8.STP.RS	67
1SNA115685R1200	M8.RS	64
1SNA115831R0400	D8.ST1.RS.IP20	69
1SNA115914R0700	D8.ST.RS	68
1SNA115928R1500	D10.SNBTB1	163
1SNA115929R1600	D10.SNBTB2	164
1SNA115930R1300	M6.RS	63
1SNA115971R1000	M8.ST1.IP20	159
1SNA116536R0500	PC6-3	112
1SNA116537R0600	PC6-4	112
1SNA116538R1700	PC8-2	20
1SNA116539R1000	PC8-3	113
1SNA116540R2500	PC8-4	113
1SNA116713R1600	FEM12F	102
1SNA116771R2000	FED3E	192
1SNA116781R1300	FEMT5	166
1SNA116783R1500	CVABM1	166
1SNA116795R1100	SCFCV1-2	112
1SNA116951R1500	FEM8S	121
1SNA116964R1200	FED6	213
1SNA116965R1300	FEDA6	224
1SNA116977R1700	FEM13F	103
1SNA116979R2100	FEMSTA	162
1SNA116987R0200	FEMR8	63
1SNA116991R0600	FEMR8T	67
1SNA117318R2300	FEDR5	115
1SNA117600R0300	FEDR61	117
1SNA117668R0200	FEDR51	120
1SNA118368R1600	FEM6	66
1SNA118499R2300	FEM6D	253
1SNA118707R0300	SCF6	66
1SNA120251R0700	DR6.N	117
1SNA120491R1100	DR6.1.N	118
1SNA125117R0200	M6.NT	227
1SNA125119R1400	M8.NT	228
1SNA125121R0600	M10.NT	229
1SNA125358R0300	M16.NT	231
1SNA125487R0600	MA2.5.NT	226
1SNA125593R0000	M12.NT1	230
1SNA125711R1500	MA2.5-2CPE	178
1SNA125930R1500	M6.N.RS	63
1SNA125961R1000	MA2.5.D2-2CPE	180
1SNA128035R1600	VRB3	226
1SNA128361R0100	VRB6	230
1SNA146227R2500	MTC6.Ex	197
1SNA160496R2600	DR6.P	117
1SNA163043R2100	AL2	63
1SNA163155R2600	REH3	105
1SNA163181R1100	PT101	65
1SNA163311R2200	PC61-10	31
1SNA163313R2400	PC8-10	20
1SNA163315R2600	PC10-10	166
1SNA163394R2600	VSJ11	65
1SNA163403R2000	CPP263	84
1SNA163409R0600	CPP313	85
1SNA163418R2600	CPP353	86
1SNA163424R1400	CPP423	87
1SNA163860R0500	SFB1	213
1SNA164406R2400	BO3	213
1SNA164581R1300	BJS8	68
1SNA164582R1400	BJS8	68
1SNA164583R1500	BJS8	68
1SNA164585R1700	BJS10	65
1SNA164586R1000	BJS10	65
1SNA164587R1100	BJS10	65
1SNA164588R2200	BJS10	65
1SNA165575R2500	M16.PE.N	241
1SNA165680R0300	M12.PE.N	240
1SNA165683R2200	M10.PE.N	239
1SNA167224R2700	BJS13-10	103
1SNA167319R0600	AL2	213
1SNA167674R0200	CBD5	120
1SNA167860R0100	FC4	19
1SNA167908R0600	PC51-10	115
1SNA167927R1000	FC4-1	68
1SNA168201R1200	CPP262	84
1SNA168202R1300	CPP261	84
1SNA168203R1400	CPP312	85
1SNA168204R1500	CPP311	85
1SNA168205R1600	CPP352	86
1SNA168206R1700	CPP351	86
1SNA168207R1000	CPP422	87
1SNA168208R2100	CPP421	87
1SNA168273R1100	BJS10	65
1SNA168401R0300	EV8S	157
1SNA168520R0500	BJM8	261
1SNA168521R2200	BJM8	261
1SNA168522R2300	BJM8	261
1SNA168672R1100	TGA8	34
1SNA168673R1200	TGA8	34
1SNA168674R1300	TGA8	34
1SNA168675R1400	ANT	34

Index
Part number classification

Order code	Type	Page
1SNA168956R0600	SFB2	213
1SNA168974R0000	BJM8	261
1SNA173016R1000	SCDR61	114
1SNA173058R0200	DCV	226
1SNA173059R0300	DCJ	112
1SNA173060R0000	DCO	113
1SNA173181R1300	PSC	165
1SNA173217R2600	BJM62	117
1SNA173218R0700	BJM62	117
1SNA173219R0000	BJM62	117
1SNA173221R2200	BJM62	213
1SNA173226R2700	BJM62	117
1SNA173523R1100	PC81-10	33
1SNA173627R2100	EL6	20
1SNA173660R1600	COCF 32	176
1SNA173815R1600	BJS9.5-2	101
1SNA173816R1700	BJS9.5-3	101
1SNA173817R1000	BJS9.5-4	101
1SNA173819R2200	BJS9.5-10	101
1SNA173888R2000	BP8.A4	64
1SNA173906R2200	BRC-1	165
1SNA173907R2300	BRC-1.5	165
1SNA173908R0400	BRC-2.5	165
1SNA174393R2000	BJS12.5-2	102
1SNA174394R2100	BJS12.5-3	102
1SNA174395R2200	BJS12.5-5	102
1SNA174396R2300	BJS12.5-10	102
1SNA174558R0500	BRC-0.5	165
1SNA174601R0100	BRC-4	165
1SNA174781R2500	BJDP4	63
1SNA174789R0500	BJS8-20	68
1SNA175263T0600	ECR-3	102
1SNA176278R1600	BJMI5-2	17
1SNA176279R1700	BJMI5-3	17
1SNA176280R0500	BJMI5-4	17
1SNA176281R2200	BJMI5-5	17
1SNA176282R2300	BJMI5-10	17
1SNA176663R0000	BJMI6-2	18
1SNA176664R0100	BJMI6-3	18
1SNA176665R0200	BJMI6-4	18
1SNA176666R0300	BJMI6-5	18
1SNA176667R0400	BJMI6-10	18
1SNA176669R1600	BJMI8-2	20
1SNA176670R1300	BJMI8-3	20
1SNA176671R0000	BJMI8-4	20
1SNA176672R0100	BJMI8-5	20
1SNA176673R0200	BJMI8-10	20
1SNA176675R0400	BJMI10-2	166
1SNA176676R0500	BJMI10-3	166
1SNA176677R0600	BJMI10-4	166
1SNA176678R1700	BJMI10-5	166
1SNA176679R1000	BJMI10-10	166
1SNA176704R0200	BJMI5DR	115
1SNA176705R0300	BJMI5DR	115
1SNA176706R0400	BJMI5DR	115
1SNA176708R1600	BJMI5DR	115
1SNA176816R1200	CPV1-2	112
1SNA177652R0600	BJS5-20	116
1SNA177654R0000	BJS10-20	65
1SNA177812R1700	EL61	192
1SNA178024R2500	BJD6	192
1SNA178025R2600	BJD6	192
1SNA178026R2700	BJD6	192
1SNA178027R2000	BJD6	192
1SNA178032R2500	BJD6	192
1SNA178033R2600	BJD6	192
1SNA178408R1400	CBD2S	27
1SNA178745R1400	CBM5	17
1SNA178944R0400	OUPAD	17

Order code	Type	Page
1SNA179371R1600	CN5	121
1SNA179466R0600	OUMAD	17
1SNA179623R0300	BJDP1	20
1SNA179625R0500	BJDP3	20
1SNA179635R0700	CDB2	50
1SNA179668R2000	BJMI6D-2	253
1SNA179669R2100	BJMI6D-3	253
1SNA179670R2600	BJMI6D-4	253
1SNA179671R1300	BJMI6D-5	253
1SNA179672R1400	BJMI6D-10	253
1SNA179694R0300	ITVE	49
1SNA179726R0200	AJS9	68
1SNA179825R2600	ITVE2	245
1SNA183436R0500	CVABM	165
1SNA190001R2000	D27.FF	74
1SNA190002R2100	D32.FF	75
1SNA190003R2200	D42.FF	76
1SNA190004R2300	D55.FF	77
1SNA190005R2400	D55.FF	78
1SNA190006R2500	D27.AF	79
1SNA190007R2600	D32.AF	80
1SNA190008R0700	D42.AF	81
1SNA190009R0000	D55.AF	82
1SNA190016R1600	CPUF35	74
1SNA190017R1700	CPUF70	75
1SNA190018R2000	CPUF120	76
1SNA190019R2100	CPUF185	77
1SNA196789R2400	BNSTP2	67
1SNA196792R1700	BNSTP1	67
1SNA196896R0000	SCAD	18
1SNA199034R1500	D6.ADO	18
1SNA199035R1600	D6.ADO	18
1SNA199036R1700	D6.N.ADO	18
1SNA199042R2500	D8.ADO	20
1SNA199043R2600	D8.ADO	20
1SNA199044R2700	D8.N.ADO	20
1SNA199048R0300	D6.ADO.4	19
1SNA199050R0100	D6.P.ADO	18
1SNA199051R2600	D1.6.ADO	42
1SNA199052R2700	D1.6.ADO	42
1SNA199053R2000	D1.6.N.ADO	42
1SNA199059R0600	D2.8.ADO	43
1SNA199060R0300	D2.8.ADO	43
1SNA199061R2000	D2.8.N.ADO	43
1SNA199064R2300	D6.ADO.2	19
1SNA199091R1700	D2.8.P.ADO	43
1SNA199098R2600	D1.6.P.ADO	42
1SNA199107R2400	D6.SN.ADO	31
1SNA199108R0500	D6.SN.ADO	31
1SNA199118R2600	D8.P.ADO	20
1SNA199135R1700	BNT1	165
1SNA199136R1000	BNT3	165
1SNA199137R1100	D8.SN.ADO	33
1SNA199144R2000	D1.6.SNT2.ADO	51
1SNA199155R2300	D8.ADO.2	21
1SNA199157R2500	D8.ADO.4	21
1SNA199184R1100	D2.8.SFT.ADO2	55
1SNA199186R1300	D2.8.SNNT.ADO2	55
1SNA199187R1400	D2.8.SFLT.ADO2	56
1SNA199188R2500	D2.8.SFDT.ADO2	56
1SNA199208R1100	D1.8.SFT.ADO	53
1SNA199211R2300	D1.8.SFLT.ADO	54
1SNA199212R2400	D1.8.SFDT.ADO	54
1SNA199231R2700	D2.8.SNT2.ADO	52
1SNA199235R2300	D6.SNT2.ADO	32
1SNA199242R0200	D6.D2.ADO	27
1SNA199244R0400	D6.D2.N.ADO	27
1SNA199248R1000	D1.6.ADO.D1	263
1SNA199275R0300	DR6.ADO	134

Order code	Type	Page
1SNA199279R1700	DR8.ADO	135
1SNA199283R2400	DR1.6.ADO	145
1SNA199287R2000	DR2.8.ADO	146
1SNA199321R2100	COCE	183
1SNA199336R2000	FEDAD1	17
1SNA199341R0500	FEMAD3	41
1SNA199352R0000	FEDAD4	29
1SNA199354R0200	FEDAD5	50
1SNA199382R2700	FEDAD7	53
1SNA199417R1200	FED2AD1	27
1SNA199420R2100	BADRL	114
1SNA199421R1600	FEAD1	129
1SNA199423R1000	FEAD2	141
1SNA199433R1200	FEAD5	129
1SNA199435R1400	FEAD6	141
1SNA199437R1600	FEAD3	137
1SNA199439R2000	FEAD4	148
1SNA199444R2500	M6.D2.2S2	245
1SNA199448R0100	M6.D2.2S2.T	246
1SNA199452R2500	M6.D2.S1R	247
1SNA199456R2100	M6.D2.S1R.T	248
1SNA199476R2500	FED2AD2	49
1SNA199480R2600	D1.6.D2.ADO	49
1SNA199527R1000	DS8.P.ADO	131
1SNA199528R2100	DS2.8.P.ADO	142
1SNA199551R2000	SCAD5	17
1SNA199554R2300	D2.5.ADO	17
1SNA199555R2400	D2.5.ADO	17
1SNA199556R2500	D2.5.N.ADO	17
1SNA199563R2400	D5.ADO	41
1SNA199564R2500	D5.ADO	41
1SNA199565R2600	D5.N.ADO	41
1SNA205735R0600	BJM4	114
1SNA205736R0700	BJM4	114
1SNA205737R0000	BJM4	114
1SNA205738R1100	BJM4	114
1SNA205767R1600	DRF6	74
1SNA205768R2700	DRF8	75
1SNA205769R2000	DRF10	76
1SNA205770R2500	DRF12	77
1SNA205771R1200	DRF16	78
1SNA205772R1300	BJS27-2	74
1SNA205773R1400	BJS27-3	74
1SNA205774R1500	BJS32-2	75
1SNA205775R1600	BJS32-3	75
1SNA205776R1700	BJS42-2	76
1SNA205777R1000	BJS42-3	76
1SNA205778R2100	BJS551-2	77
1SNA205779R2200	BJS551-3	77
1SNA205955R0300	BJADO5-2	29
1SNA205956R0400	BJADO5-3	29
1SNA205958R1600	BJADO5-5	29
1SNA205963R0300	BJADO5-10	29
1SNA205974R0600	BJADO6-2	31
1SNA205975R0700	BJADO6-3	31
1SNA205982R2700	BJADO6-10	31
1SNA206394R0200	EV6I	68
1SNA206680R1500	AJS9-1	68
1SNA206681R0200	AJS9-2	68
1SNA206682R0300	AJS9-3	68
1SNA206683R0400	AJS9-4	68
1SNA206720R1400	AJS9-5	68
1SNA206721R0100	AL4-M3	68
1SNA206722R0200	AL4-M3-R1	64
1SNA206723R0300	AL4-M4	65
1SNA215266R0100	FEM8T6	68
1SNA215580R2100	FED2-4	114
1SNA215999R2100	FED10S1	163
1SNA216110R2200	165LTTM5TM5	105

Index

Part number classification

Order code	Type	Page
1SNA216112R1000	165ETTM5TM5	106
1SNA216114R1200	FEET80	105
1SNA229000R1500	RC410	114
1SNA230000R1200	RC55	115
1SNA231000R0700	RC510	17
1SNA232000R0000	RC65	117
1SNA233000R0100	RC610	18
1SNA234000R0200	RC810	20
1SNA235463R2300	RPA	96
1SNA236500R0600	RCT810	101
1SNA237000R0500	RCAL85	131
1SNA238000R1600	RC1010	65
1SNA280092R2500	CPE43	103
1SNA280093R2600	CPE80	105
1SNA290201R1100	DR2.5.2L	124
1SNA290203R1300	DR2.5.N.2L	124
1SNA290211R0200	DR2.10.4L	125
1SNA290213R0400	DR2.10.N.4L	125
1SNA290219R1200	DR2.10.P.4L	124
1SNA290221R0400	DS2.5.2L	122
1SNA290223R0600	DS2.5.N.2L	122
1SNA290231R0600	DS2.10.4L	123
1SNA290233R0000	DS2.10.N.4L	123
1SNA290241R1000	DB2.5.2L	127
1SNA290243R1200	DB2.5.N.2L	127
1SNA290261R1400	DH2.5.2L	128
1SNA290281R0100	FEDB.L	127
1SNA290322R0100	D2.5.NTLP.L	232
1SNA290324R0300	D2.5.NLP.L	233
1SNA290326R0500	D2.5.LLP.L	234
1SNA290328R1700	D2.5.LL.L	232
1SNA290330R1500	D2.5.NL.L	234
1SNA290350R2100	D2.5.C3.L	198
1SNA290352R1700	D2.5.C3.L.L	199
1SNA290354R1100	D2.5.C4.L	200
1SNA290356R1300	D2.5.C4.L.L	201
1SNA290358R2500	FED5.C3.L	198
1SNA290360R2300	FED5.C4.L	200
1SNA290365R1400	PC5.34	198
1SNA290366R1500	PC5.34	198
1SNA290367R1600	PC5.34	198
1SNA290451R0300	BJE762.2	183
1SNA290452R0400	BJE762.5	183
1SNA290453R0500	BJE762.10	183
1SNA290454R0600	EIP	183
1SNA290455R0700	RB-12W7	183
1SNA290483R2400	D2.7.ADO-CPE	184
1SNA290484R2500	D2.7.2ADO-CPE	186
1SNA290486R2700	D1.7.ADO-CPE	183
1SNA290487R2000	D1.7.2ADO-CPE	185
1SNA290501R0000	DS2.10.4L.YL	123
1SNA291102R2300	BJDL5-2	122
1SNA291103R2400	BJDL5-3	122
1SNA291104R2500	BJDL5-4	122
1SNA291105R2600	BJDL5-5	122
1SNA291110R2600	BJDL5-10	122
1SNA291301R0200	FED1.L	122
1SNA291311R2300	FED2.L	122
1SNA291322R2600	BJDL10-2	123
1SNA291323R2700	BJDL10-3	123
1SNA291324R2000	BJDL10-4	123
1SNA291325R2100	BJDL10-5	123
1SNA291559R0400	FED5.L.A	232
1SNA291560R0100	FED5.L.B	233
1SNA291833R1700	FECPE.2ADO	185
1SNA296114R1300	FEET80	107
1SNA296117R1600	165ETTM5TM5-2	107
1SNA299489R0700	DS6.ADO	130
1SNA299493R2300	DS8.ADO	131

Order code	Type	Page
1SNA299497R2700	DS1.6.ADO	141
1SNA299501R0300	DS2.8.ADO	142
1SNA299505R0700	DB6.ADO	138
1SNA299509R1300	DB8.ADO	139
1SNA299513R2600	DB1.6.ADO	148
1SNA299517R2200	DB2.8.ADO	149
1SNA299521R2600	DH6.ADO	140
1SNA299529R0600	DH1.6.ADO	150
1SNA299552R0500	DRE6.ADO	134
1SNA299554R0700	DRE1.6.ADO	145
1SNA299555R0000	DRE2.8.ADO	146
1SNA299556R0100	DSE6.ADO	130
1SNA299557R0200	DSE8.ADO	131
1SNA299558R1300	DSE1.6.ADO	141
1SNA299559R1400	DSE2.8.ADO	142
1SNA299632R0500	DR8.P.ADO	135
1SNA299633R0600	DR2.8.P.ADO	146
1SNA299777R1600	COC 1	176
1SNA399030R0500	D2.5.P.ADO	17
1SNA399031R2200	D5.P.ADO	41
1SNA399226R0200	D2.5.SN.ADO	29
1SNA399228R1400	D2.5.SNT2.ADO	30
1SNA399231R0700	D5.SNT2.ADO	50
1SNA399244R1400	D8.ADO	44
1SNA399245R1500	D8.ADO3	22
1SNA399250R2600	D8.P.ADO	44
1SNA399251R1300	D8.P.ADO3	22
1SNA399318R1600	D8.N.ADO	44
1SNA399319R1700	D8.N.ADO3	22
1SNA399491R2500	DR5.ADO	144
1SNA399495R2100	DRE5.ADO	144
1SNA399509R1700	DR2.5.ADO	133
1SNA399513R2200	DRE2.5.ADO	133
1SNA399514R2300	DS2.5.ADO	129
1SNA399518R0700	DSE2.5.ADO	129
1SNA399519R0000	DB2.5.ADO	137
1SNA399600R2600	D8.D2.ADO	28
1SNA399678R2700	FED5.C3.ADO	202
1SNA399679R2000	FED5.C4.ADO	204
1SNA399683R0500	PC52.10	202
1SNA399684R0600	PC52.10	202
1SNA399685R0700	PC52.10	202
1SNA399689R1300	D5.C3.ADO	202
1SNA399690R1000	D5.C3.ADO.L	203
1SNA399692R0600	D5.C4.ADO	204
1SNA399693R0700	D5.C4.ADO.L	205
1SNA399707R1500	PC52.66	202
1SNA399708R2600	PC52.66	202
1SNA399709R2700	PC52.66	202
1SNA399758R2700	FEDAD10	34
1SNA399762R1300	D8.SFT2.I.ADO2	37
1SNA399766R1700	D8.SNNT2.I.ADO2	37
1SNA399768R2100	D8.SFLT2.I.ADO2	38
1SNA399770R2700	D8.SFDT2.I.ADO2	38
1SNA399777R1200	D8.SFT2.I.ADO	35
1SNA399779R2400	D8.SNNT2.I.ADO	34
1SNA399782R0000	D8.SFDT2.I.ADO	36
1SNA399785R0300	D8.SF.I.ADO	34
1SNA399800R1700	D8.ADO3	22
1SNA399801R0400	D8.ADO	44
1SNA399856R0200	D8.SFLT2.I.ADO	36
1SNA399886R2100	SPBO.NT.L	232
1SNA399931R2500	D6.D1.P.ADO	27
1SNA400063R0000	VRADO.CPE7	183
1SNA400270R2000	D8.D2.P.SF	261
1SNA400271R1500	D8.D2.P.SFL	262
1SNA400272R1600	D8.D2.P.SFD	262
1SNA400273R1700	FEM8D2S1	261
1SNA400711R0600	PC8-R1	157

Order code	Type	Page
1SNA400712R0700	PC8-R2	157
1SNA400713R0000	PC8-R3	157
1SNA400724R0300	PC8-R4	157
1SNA400753R1000	M12.FF	102
1SNA400813R0000	MA2.5.D2-2CPE	180
1SNA400814R0000	MA2.5-CPE	176
1SNA400815R0000	MA2.5-SNB-CPE	182
1SNA400817R0000	MA2.5-2CPE	178
1SNA400818R0000	ENS.FEDBCP	180
1SNA400819R0000	ENS.FE-BCP	176
1SNA400821R0000	MA2.5-2CPE1-Pb	179
1SNA400822R0000	MA2.5-CPE.1	177
1SNA400823R0000	MA2.5.D-2CPE	181
1SNA400824R0000	FEM6	176
1SNA400825R0000	FEDCP	180
1SNA400826R0000	FE2CPE	178
1SNA400827R0000	MA2.5-CPE	176
1SNK900001R0000	BAM4	17
1SNK900002R0000	BAZ1	17
1SNK900102R0000	BAZH1	27
1SNK900652R0000	SC-JB8-2	68
1SNK900653R0000	SC-JB8-3	68
1SNK900654R0000	SC-JB8-4	68

Index
Type classification

Type	Order code	Page
165ETTM5TM5	1SNA216112R1000	106
165ETTM5TM5-2	1SNA296117R1600	107
165LTTM5TM5	1SNA216110R2200	106
AD2.5	1SNA114205R2000	248
AJS9	1SNA179726R0200	169
AJS9-1	1SNA206680R1500	170
AJS9-2	1SNA206681R0200	170
AJS9-3	1SNA206682R0300	170
AJS9-4	1SNA206683R0400	170
AJS9-5	1SNA206720R1400	170
AL2	1SNA163043R2100	262
	1SNA167319R0600	225
AL4-M3	1SNA206721R0100	262
AL4-M3-R1	1SNA206722R0200	106
AL4-M4	1SNA206723R0300	65
ANT	1SNA168675R1400	262
BADRL	1SNA199420R2100	147
BAM4	1SNK900001R0000	263
BAMH	1SNA114836R0000	95
BAZ1	1SNK900002R0000	263
BAZH1	1SNK900102R0000	262
BJADO5-10	1SNA205963R0300	144
BJADO5-2	1SNA205955R0300	144
BJADO5-3	1SNA205956R0400	144
BJADO5-5	1SNA205958R1600	29
BJADO6-10	1SNA205982R2700	263
BJADO6-2	1SNA205974R0600	263
BJADO6-3	1SNA205975R0700	263
BJD6	1SNA178024R2500	196
	1SNA178025R2600	196
	1SNA178026R2700	196
	1SNA178027R2000	196
	1SNA178032R2500	196
	1SNA178033R2600	196
BJDL10-2	1SNA291322R2600	125
BJDL10-3	1SNA291323R2700	125
BJDL10-4	1SNA291324R2000	125
BJDL10-5	1SNA291325R2100	125
BJDL5-10	1SNA291110R2600	236
BJDL5-2	1SNA291102R2300	236
BJDL5-3	1SNA291103R2400	236
BJDL5-4	1SNA291104R2500	236
BJDL5-5	1SNA291105R2600	236
BJDP1	1SNA179623R0300	44
BJDP3	1SNA179625R0500	44
BJDP4	1SNA174781R2500	63
BJE762.10	1SNA290453R0500	186
BJE762.2	1SNA290451R0300	186
BJE762.5	1SNA290452R0400	186
BJM4	1SNA205735R0600	114
	1SNA205736R0700	114
	1SNA205737R0000	114
	1SNA205738R1100	114
BJM62	1SNA173217R2600	225
	1SNA173218R0700	225
	1SNA173219R0000	225
	1SNA173221R2200	225
	1SNA173226R2700	225
BJM8	1SNA168520R0500	262
	1SNA168521R2200	262
	1SNA168522R2300	262
	1SNA168974R0000	262
BJMI10-10	1SNA176679R1000	166
BJMI10-2	1SNA176675R0400	166
BJMI10-3	1SNA176676R0500	166
BJMI10-4	1SNA176677R0600	166
BJMI10-5	1SNA176678R1700	166
BJMI5-10	1SNA176282R2300	181
BJMI5-2	1SNA176278R1600	181
BJMI5-3	1SNA176279R1700	181
BJMI5-4	1SNA176280R0500	181
BJMI5-5	1SNA176281R2200	178
BJMI5DR	1SNA176704R0200	116
	1SNA176705R0300	116
	1SNA176706R0400	116
	1SNA176708R1600	116
BJMI6-10	1SNA176667R0400	63
BJMI6-2	1SNA176663R0000	63
BJMI6-3	1SNA176664R0100	63
BJMI6-4	1SNA176665R0200	63
BJMI6-5	1SNA176666R0300	63
BJMI6D-10	1SNA179672R1400	260
BJMI6D-2	1SNA179668R2000	260
BJMI6D-3	1SNA179669R2100	260
BJMI6D-4	1SNA179670R2600	260
BJMI6D-5	1SNA179671R1300	260
BJMI8-10	1SNA176673R0200	64
BJMI8-2	1SNA176669R1600	64
BJMI8-3	1SNA176670R1300	64
BJMI8-4	1SNA176671R0000	64
BJMI8-5	1SNA176672R0100	64
BJS10	1SNA164585R1700	65
	1SNA164586R1000	65
	1SNA164587R1100	65
	1SNA164588R2200	65
	1SNA168273R1100	65
BJS10-20	1SNA177654R0000	65
BJS12.5-10	1SNA174396R2300	102
BJS12.5-2	1SNA174393R2000	102
BJS12.5-3	1SNA174394R2100	102
BJS12.5-5	1SNA174395R2200	102
BJS13-10	1SNA167224R2700	104
BJS27-2	1SNA205772R1300	79
BJS27-3	1SNA205773R1400	79
BJS32-2	1SNA205774R1500	80
BJS32-3	1SNA205775R1600	80
BJS42-2	1SNA205776R1700	81
BJS42-3	1SNA205777R1000	81
BJS5-20	1SNA177652R0600	116
BJS551-2	1SNA205778R2100	82
BJS551-3	1SNA205779R2200	82
BJS8	1SNA164581R1300	169
	1SNA164582R1400	169
	1SNA164583R1500	169
BJS8-20	1SNA174789R0500	169
BJS9.5-10	1SNA173819R2200	101
BJS9.5-2	1SNA173815R1600	101
BJS9.5-3	1SNA173816R1700	101
BJS9.5-4	1SNA173817R1000	101
BNSTP1	1SNA196792R1700	168
BNSTP2	1SNA196789R2400	168
BNT1	1SNA199135R1700	166
BNT2	1SNA114329R2300	166
BNT3	1SNA199136R1000	166
BO3	1SNA164406R2400	232
BP8.A4	1SNA173888R2000	168
BRC-0.5	1SNA174558R0500	166
BRC-1	1SNA173906R2200	166
BRC-1.5	1SNA173907R2300	166
BRC-2.5	1SNA173908R0400	166
BRC-4	1SNA174601R0100	166
CBD2S	1SNA178408R1400	248
CBD5	1SNA167674R0200	120
CBM5	1SNA178745R1400	263
CDB2	1SNA179635R0700	51
CN5	1SNA179371R1600	262
COC 1	1SNA299777R1600	182
COCE	1SNA199321R2100	186
COCF 32	1SNA173660R1600	182
CPE43	1SNA280092R2500	104
CPE80	1SNA280093R2600	107
CPFT10	1SNA094310R2400	182
CPFT2	1SNA094302R2100	182
CPFT3	1SNA094303R2200	182
CPFT4	1SNA094304R2300	182
CPFTR-10	1SNA094360R0600	182
CPFTR-2	1SNA094352R2200	182
CPFTR-3	1SNA094353R2300	182
CPFTR-4	1SNA094354R2400	182
CPP261	1SNA168202R1300	92
CPP262	1SNA168201R1200	92
CPP263	1SNA163403R2000	92
CPP311	1SNA168204R1500	93
CPP312	1SNA168203R1400	93
CPP313	1SNA163409R0600	93
CPP351	1SNA168206R1700	94
CPP352	1SNA168205R1600	94
CPP353	1SNA163418R2600	94
CPP421	1SNA168208R2100	95
CPP422	1SNA168207R1000	95
CPP423	1SNA163424R1400	95
CPUF120	1SNA190018R2000	81
CPUF185	1SNA190019R2100	82
CPUF35	1SNA190016R1600	79
CPUF70	1SNA190017R1700	80
CPV1-2	1SNA176816R1200	113
CVABM	1SNA183436R0500	165
CVABM1	1SNA116783R1500	166
D1.6.ADO	1SNA199051R2600	42
	1SNA199052R2700	42
D1.6.ADO.D1	1SNA199248R1000	263
D1.6.D2.ADO	1SNA199480R2600	49
D1.6.N.ADO	1SNA199053R2000	42
D1.6.P.ADO	1SNA199098R2600	46
D1.6.SNT2.ADO	1SNA199144R2000	51
D1.7.2ADO-CPE	1SNA290487R2000	185
D1.7.ADO-CPE	1SNA290486R2700	183
D1.8.SFDT.ADO	1SNA199212R2400	54
D1.8.SFLT.ADO	1SNA199211R2300	54
D1.8.SFT.ADO	1SNA199208R1100	53
D5.ADO	1SNA199563R2400	41
	1SNA199564R2500	41
D5.C3.ADO	1SNA399689R1300	202
D5.C3.ADO.L	1SNA399690R1000	203
D5.C4.ADO	1SNA399692R0600	204
D5.C4.ADO.L	1SNA399693R0700	205
D5.N.ADO	1SNA199565R2600	41
D5.P.ADO	1SNA399031R2200	45
D5.SNT2.ADO	1SNA399231R0700	50
D42.AF	1SNA190008R0700	81
D42.FF	1SNA190003R2200	76
D55.AF	1SNA190009R0000	82
D55.FF	1SNA190004R2300	77
D2.5.ADO	1SNA199554R2300	17
	1SNA199555R2400	17
D2.5.C3.L	1SNA290350R2100	198
D2.5.C3.L.L	1SNA290352R1700	199
D2.5.C4.L	1SNA290354R1100	200
D2.5.C4.L.L	1SNA290356R1300	201
D2.5.LL.L	1SNA290328R1700	236
D2.5.LLP.L	1SNA290326R0500	235
D2.5.N.ADO	1SNA199556R2500	17
D2.5.NL.L	1SNA290330R1500	235
D2.5.NLP.L	1SNA290324R0300	233
D2.5.NTLP.L	1SNA290322R0100	232
D2.5.P.ADO	1SNA399030R0500	23
D2.5.SN.ADO	1SNA399226R0200	29

Index
Type classification

Type	Order code	Page
D2.5.SNT2.ADO	1SNA399228R1400	30
D2.6.D	1SNA115542R1200	194
D2.6.DA	1SNA115541R1100	193
D2.6.DAL2	1SNA115547R1700	196
D2.6.DL	1SNA115537R0500	195
D2.6.DPA1	1SNA115643R2700	192
D2.7.2ADO-CPE	1SNA290484R2500	186
D2.7.ADO-CPE	1SNA290483R2400	184
D2.8.ADO	1SNA199059R0600	43
	1SNA199060R0300	43
D2.8.N.ADO	1SNA199061R2000	43
D2.8.P.ADO	1SNA199091R1700	47
D2.8.SFDT.ADO2	1SNA199188R2500	56
D2.8.SFLT.ADO2	1SNA199187R1400	56
D2.8.SFT.ADO2	1SNA199184R1100	57
D2.8.SNNT.ADO2	1SNA199186R1300	57
D2.8.SNT2.ADO	1SNA199231R2700	52
D55.FF	1SNA190005R2400	78
D27.AF	1SNA190006R2500	79
D27.FF	1SNA190001R2000	74
D6.A.LLP	1SNA110418R2500	225
D6.A.NTLP	1SNA110415R1200	224
D6.ADO	1SNA199034R1500	18
	1SNA199035R1600	18
D6.ADO.2	1SNA199064R2300	19
D6.ADO.4	1SNA199048R0300	19
D6.D1.P.ADO	1SNA399931R2500	27
D6.D2.ADO	1SNA199242R0200	27
D6.D2.N.ADO	1SNA199244R0400	27
D6.LL	1SNA110442R2500	216
D6.LLP	1SNA110441R2400	215
D6.LNTP1	1SNA110264R0200	217
D6.LNTP2	1SNA110327R2100	219
D6.LNTP3	1SNA110269R1700	218
D6.LNTP4	1SNA110328R0200	221
D6.LNTP6	1SNA110331R2500	223
D6.LNTP7	1SNA110332R2600	222
D6.LNTP8	1SNA110333R2700	220
D6.N.ADO	1SNA199036R1700	18
D6.NLP	1SNA110440R0700	214
D6.NTLP	1SNA110439R2200	213
D6.P.ADO	1SNA199050R0100	24
D6.SN.ADO	1SNA199107R2400	31
	1SNA199108R0500	31
D6.SNT2.ADO	1SNA199235R2300	32
D8.ADO	1SNA399244R1400	44
	1SNA399801R0400	44
D8.D2.P.SF	1SNA400270R2000	261
D8.D2.P.SFD	1SNA400272R1600	262
D8.D2.P.SFL	1SNA400271R1500	262
D8.N.ADO	1SNA399318R1600	44
D8.P.ADO	1SNA399250R2600	48
D8.SF.I.ADO	1SNA399785R0300	34
D8.SFDT2.I.ADO	1SNA399782R0000	36
D8.SFDT2.I.ADO2	1SNA399770R2700	38
D8.SFLT2.I.ADO	1SNA399856R0200	36
D8.SFLT2.I.ADO2	1SNA399768R2100	38
D8.SFT2.I.ADO	1SNA399777R1200	39
D8.SFT2.I.ADO2	1SNA399762R1300	40
D8.SN.ADO	1SNA199137R1100	33
D8.SNNT2.I.ADO	1SNA399779R2400	39
D8.SNNT2.I.ADO2	1SNA399766R1700	40
D10.SNBTB1	1SNA115928R1500	163
D10.SNBTB2	1SNA115929R1600	164
D8.ADO	1SNA199042R2500	20
	1SNA199043R2600	20
D8.ADO.2	1SNA199155R2300	21
D8.ADO.4	1SNA199157R2500	21
D8.ADO3	1SNA399245R1500	22
	1SNA399800R1700	22
D8.D2.ADO	1SNA399600R2600	28
D8.N.ADO	1SNA199044R2700	20
D8.N.ADO3	1SNA399319R1700	22
D8.P.ADO	1SNA199118R2600	25
D8.P.ADO3	1SNA399251R1300	26
D8.ST.RS	1SNA115914R0700	169
D8.ST1.RS.IP20	1SNA115831R0400	170
D32.AF	1SNA190007R2600	80
D32.FF	1SNA190002R2100	75
DB1.6.ADO	1SNA299513R2600	148
DB2.5.2L	1SNA290241R1000	127
DB2.5.ADO	1SNA399519R0000	137
DB2.5.N.2L	1SNA290243R1200	127
DB2.8.ADO	1SNA299517R2200	149
DB6.ADO	1SNA299505R0700	138
DB8.ADO	1SNA299509R1300	139
DCB	1SNA105028R2100	182
DCJ	1SNA173059R0300	112
DCO	1SNA173060R0000	113
DCV	1SNA173058R0200	227
DH1.6.ADO	1SNA299529R0600	150
DH2.5.2L	1SNA290261R1400	128
DH6.ADO	1SNA299521R2600	140
DR1.4	1SNA110106R2500	114
DR1.5	1SNA115510R1600	115
DR1.5.1	1SNA112086R0200	116
DR1.6.ADO	1SNA199283R2400	145
DR5.ADO	1SNA399491R2500	144
DR2.10.4L	1SNA290211R0200	125
DR2.10.N.4L	1SNA290213R0400	125
DR2.10.P.4L	1SNA290219R1200	126
DR2.5.2L	1SNA290201R1100	124
DR2.5.ADO	1SNA399509R1700	133
DR2.5.N.2L	1SNA290203R1300	124
DR2.5.S1	1SNA112098R1600	120
DR2.8.ADO	1SNA199287R2000	146
DR2.8.P.ADO	1SNA299633R0600	147
DR6	1SNA110251R0500	117
DR6.1	1SNA110491R1700	118
DR6.1.N	1SNA120491R1100	118
DR6.ADO	1SNA199275R0300	134
DR6.N	1SNA120251R0700	117
DR6.P	1SNA160496R2600	119
DR8.ADO	1SNA199279R1700	135
DR8.P.ADO	1SNA299632R0500	136
DR8.SF	1SNA110368R1200	121
DRE1.6.ADO	1SNA299554R0700	145
DRE5.ADO	1SNA399495R2100	144
DRE2.5.ADO	1SNA399513R2200	133
DRE2.8.ADO	1SNA299555R0000	146
DRE6.ADO	1SNA299552R0500	134
DRF10	1SNA205769R2000	81
DRF12	1SNA205770R2500	82
DRF16	1SNA205771R1200	78
DRF6	1SNA205767R1600	79
DRF8	1SNA205768R2700	80
DS1.6.ADO	1SNA299497R2700	141
DS2.10.4L	1SNA290231R0600	123
DS2.10.4L.YL	1SNA290501R0000	123
DS2.10.N.4L	1SNA290233R0000	123
DS2.5.2L	1SNA290221R0400	122
DS2.5.ADO	1SNA399514R2300	129
DS2.5.N.2L	1SNA290223R0600	122
DS2.8.ADO	1SNA299501R0300	142
DS2.8.P.ADO	1SNA199528R2100	143
DS6.ADO	1SNA299489R0700	130
DS8.ADO	1SNA299493R2300	131
DS8.P.ADO	1SNA199527R1000	132
DSE1.6.ADO	1SNA299558R1300	141
DSE2.5.ADO	1SNA399518R0700	129
DSE2.8.ADO	1SNA299559R1400	142
DSE6.ADO	1SNA299556R0100	130
DSE8.ADO	1SNA299557R0200	131
ECP26	1SNA113689R2400	96
ECP31	1SNA113690R2100	96
ECP35	1SNA113691R1600	96
ECP42	1SNA113692R1700	96
ECR-3	1SNA175263T0600	102
EIP	1SNA113550R2400	248
	1SNA290454R0600	186
EL6	1SNA173627R2100	262
EL61	1SNA177812R1700	196
ENS.FE-BCP	1SNA400819R0000	177
ENS.FEDBCP	1SNA400818R0000	181
EV6I	1SNA206394R0200	169
EV8S	1SNA168401R0300	161
FC2	1SNA007865R2600	248
FC2.MC	1SNA107239R0300	57
FC4	1SNA167860R0100	168
FC4-1	1SNA167927R1000	170
FE2CPE	1SNA400826R0000	182
FEAD1	1SNA199421R1600	140
FEAD2	1SNA199423R1000	150
FEAD3	1SNA199437R1600	139
FEAD4	1SNA199439R2000	149
FEAD5	1SNA199433R1200	140
FEAD6	1SNA199435R1400	150
FECPE.2ADO	1SNA291833R1700	186
FED1.L	1SNA291301R0200	128
FED10S1	1SNA215999R2100	164
FED2.L	1SNA291311R2300	128
FED2-4	1SNA215580R2100	114
FED2AD1	1SNA199417R1200	28
FED2AD2	1SNA199476R2500	49
FED3E	1SNA116771R2000	196
FED5.C3.ADO	1SNA399678R2700	203
FED5.C3.L	1SNA290358R2500	199
FED5.C4.ADO	1SNA399679R2000	205
FED5.C4.L	1SNA290360R2300	201
FED5.L.A	1SNA291559R0400	232
FED5.L.B	1SNA291560R0100	236
FED6	1SNA116964R1200	216
FEDA6	1SNA116965R1300	225
FEDAD1	1SNA199336R2000	26
FEDAD10	1SNA399758R2700	40
FEDAD4	1SNA199352R0000	33
FEDAD5	1SNA199354R0200	52
FEDAD7	1SNA199382R2700	57
FEDB.L	1SNA290281R0100	127
FEDCP	1SNA400825R0000	181
FEDR5	1SNA117318R2300	116
FEDR51	1SNA117668R0200	120
FEDR61	1SNA117600R0300	119
FEET80	1SNA216114R1200	106
	1SNA296114R1300	107
FEM12F	1SNA116713R1600	102
FEM13F	1SNA116977R1700	104
FEM6	1SNA118368R1600	230
	1SNA400824R0000	177
FEM6D	1SNA118499R2300	260
FEM8D2S1	1SNA400273R1700	262
FEM8S	1SNA116951R1500	121
FEM8T6	1SNA215266R0100	170
FEM9	1SNA113067R1700	101
FEMAD3	1SNA199341R0500	263
FEMR10	1SNA114434R0500	65
FEMR8	1SNA116987R0200	64

Index
Type classification

Type	Order code	Page
FEMR8T	1SNA116991R0600	67
FEMS6	1SNA113885R0100	112
FEMS8	1SNA114195R0600	113
FEMSTA	1SNA116979R2100	162
FEMT1	1SNA113137R0200	168
FEMT2	1SNA113629R2700	161
FEMT3	1SNA114328R2200	165
FEMT4	1SNA114778R0500	162
FEMT5	1SNA116781R1300	166
FU520	1SNA008288R1500	262
	1SNA008289R1600	121
	1SNA008290R1300	262
	1SNA008291R0000	262
	1SNA008292R0100	121
ITVE	1SNA179694R0300	49
ITVE2	1SNA179825R2600	246
M10.NT	1SNA125121R0600	229
M10.PE.N	1SNA165683R2200	239
M10.RS	1SNA115320R2700	65
M10.ST-Sn	1SNA115539R1700	166
M35.AF	1SNA115145R1400	90
M35.F	1SNA115147R1600	94
M35.FF	1SNA115146R1500	86
M12.NT1	1SNA125593R0000	230
M12.PE.N	1SNA165680R0300	240
M42.AF	1SNA115148R2700	91
M42.F	1SNA115150R2500	95
M42.FF	1SNA115149R2000	87
M16.NT	1SNA125358R0300	231
M16.PE.N	1SNA165575R2500	241
M26.AF	1SNA115139R1600	88
M26.F	1SNA115141R1000	92
M26.FF	1SNA115140R2300	84
M6.D2.2S2	1SNA199444R2500	245
M6.D2.2S2.T	1SNA199448R0100	246
M6.D2.S1R	1SNA199452R2500	247
M6.D2.S1R.T	1SNA199456R2100	248
M6.DD	1SNA115168R2300	256
M6.DD1	1SNA115184R0400	257
M6.DE	1SNA115185R0500	258
M6.DE1	1SNA115177R1400	259
M6.DE1.D	1SNA115371R2600	253
M6.DE1.D1	1SNA115591R0400	254
M6.DE2	1SNA115326R1100	260
M6.DE2.D	1SNA115327R1200	255
M6.N.RS	1SNA125930R1500	63
M6.NT	1SNA125117R0200	227
M6.RS	1SNA115930R1300	63
M6.SNTS	1SNA115229R2000	66
M6.ST.Au	1SNA115314R1500	165
M6.ST.Sn	1SNA115313R1400	165
M12.FF	1SNA115262R2100	102
	1SNA115263R2200	102
	1SNA115511R0300	102
	1SNA400753R1000	102
M13.FF	1SNA115626R1600	103
M13.FF.1	1SNA115627R1700	104
M8.NT	1SNA125119R1400	228
M8.RS	1SNA115685R1200	64
M8.ST	1SNA115236R1700	157
M8.ST1	1SNA115237R1000	158
M8.ST1.IP20	1SNA115971R1000	159
M8.ST3	1SNA115239R2200	160
M8.ST7	1SNA115243R2600	161
M8.STA	1SNA115359R0200	162
M8.STP	1SNA105141R2700	168
	1SNA105142R2000	168
	1SNA115277R2000	168
M8.STP.RS	1SNA115678R0200	67
M8.STP1	1SNA115529R1500	167
M8.STP3	1SNA115500R2500	168
M9.EE	1SNA115201R2500	101
M31.AF	1SNA115142R1100	89
M31.F	1SNA115144R1300	93
M31.FF	1SNA115143R1200	85
MA2.5.D2-2CPE	1SNA125961R1000	180
	1SNA400813R0000	180
MA2.5.D-2CPE	1SNA400823R0000	181
MA2.5.NT	1SNA125487R0600	226
MA2.5-2CPE	1SNA125711R1500	178
	1SNA400817R0000	178
MA2.5-2CPE1-Pb	1SNA400821R0000	179
MA2.5-CPE	1SNA400814R0000	176
	1SNA400827R0000	176
MA2.5-CPE.1	1SNA400822R0000	177
MA2.5-SNB-CPE	1SNA400815R0000	182
MS6	1SNA105265R0300	112
	1SNA115265R2400	112
MS8	1SNA115278R0100	113
MTC6	1SNA115206R2200	197
MTC6.Ex	1SNA146227R2500	197
OUMAD	1SNA179466R0600	263
OUPAD	1SNA178944R0400	263
PC10-10	1SNA163315R2600	166
PC5.34	1SNA290365R1400	201
	1SNA290366R1500	201
	1SNA290367R1600	201
PC5-10	1SNA113544R1200	182
PC51-10	1SNA167908R0600	116
PC5-2	1SNA113542R1000	182
PC52.10	1SNA399683R0500	205
	1SNA399684R0600	205
	1SNA399685R0700	205
PC52.66	1SNA399707R1500	205
	1SNA399708R2600	205
	1SNA399709R2700	205
PC6-10	1SNA113548R2600	248
PC61-10	1SNA163311R2200	260
PC6-2	1SNA113546R1400	248
PC6-3	1SNA116536R0500	248
PC6-4	1SNA116537R0600	248
PC8-10	1SNA163313R2400	168
PC81-10	1SNA173523R1100	262
PC8-2	1SNA116538R1700	168
PC8-3	1SNA116539R1000	168
PC8-4	1SNA116540R2500	168
PC8-R1	1SNA400711R0600	161
PC8-R2	1SNA400712R0700	161
PC8-R3	1SNA400713R0000	161
PC8-R4	1SNA400724R0300	161
PEP	1SNA113762R2400	96
PSC	1SNA173181R1300	166
PT101	1SNA163181R1100	65
RB-12W7	1SNA290455R0700	186
RC1010	1SNA238000R1600	231
RC410	1SNA229000R1500	114
RC510	1SNA231000R0700	226
RC55	1SNA230000R1200	236
RC610	1SNA233000R0100	263
RC65	1SNA232000R0000	225
RC810	1SNA234000R0200	262
RCAL85	1SNA237000R0500	149
RCT810	1SNA236500R0600	102
REH3	1SNA163155R2600	107
RPA	1SNA235463R2300	96
SCAD	1SNA196896R0000	49
SCAD5	1SNA199551R2000	41
SCD	1SNA103189R2600	225
SCDR61	1SNA173016R1000	119
SCF6	1SNA118707R0300	66
SCF9	1SNA103672R0100	102
SCFCV1-2	1SNA116795R1100	113
SCFD	1SNA114117R0700	225
SCFEX1	1SNA103619R0400	240
SCFEX3	1SNA103620R0100	240
SCFM6	1SNA114825R0500	240
SCFT1	1SNA103588R2600	168
SCFT2	1SNA114522R0500	161
SC-JB8-2	1SNK900652R0000	170
SC-JB8-3	1SNK900653R0000	170
SC-JB8-4	1SNK900654R0000	170
SFB1	1SNA163860R0500	232
SFB2	1SNA168956R0600	232
SPBO.NT.L	1SNA399886R2100	236
TGA8	1SNA168672R1100	262
	1SNA168673R1200	262
	1SNA168674R1300	262
VRADO.CPE7	1SNA400063R0000	186
VRB3	1SNA128035R1600	231
VRB6	1SNA128361R0100	230
VSJ11	1SNA163394R2600	65

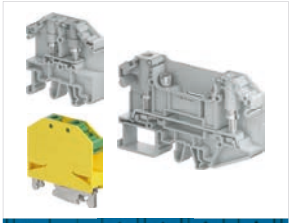

RGW RING LUG TERMINAL BLOCKS

Stud technology

ENTRELEC Terminal Blocks

RGW Ring lug terminal blocks
Stud technology

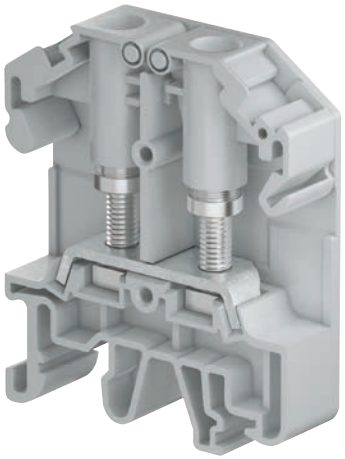

Fast and secured wiring for ring lugs

The RGW terminal blocks offer a combination of fast and secured wiring.Thanks to its exceptional design, the nuts are captive in a pivoting wing and provide a convenient wiring of ring lugs.

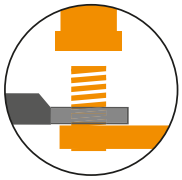

RoHS

Speed up your processes
Fast ring lug connection

- 45% faster than open style terminal blocks thanks to captive and ready to tighten nuts
- No need to remove the nuts for the first use
- Easy 3 steps wiring.

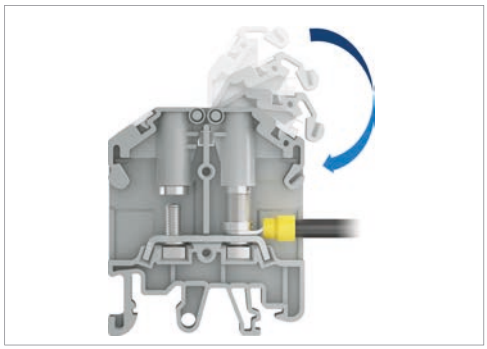

Security and protection
Secured wiring

- 100% captive wire connection: optimal combination of stud, safety wings, captive nut and ring lug
- Self-locking wings to prevent sudden opening
- Touch proof design.

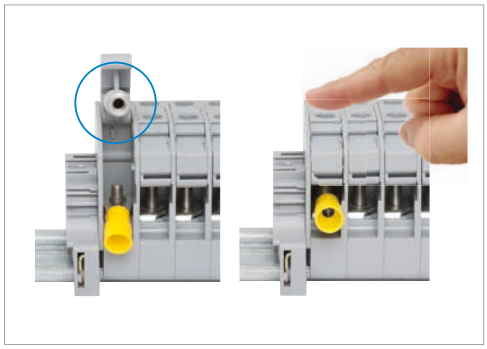

Improve installation efficiency
Convenient installation

- 15% more compact: save space on the DIN Rail versus open style terminal blocks
- Universal foot for mounting on symmetrical and asymmetrical DIN Rails.

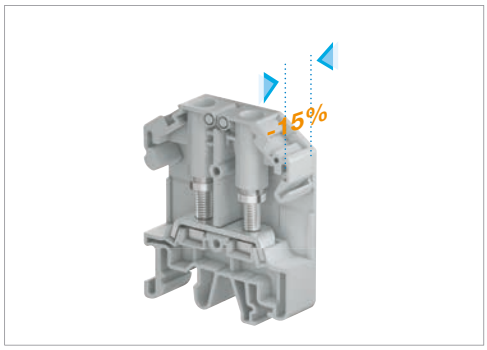

1SNC168020S0201

Features

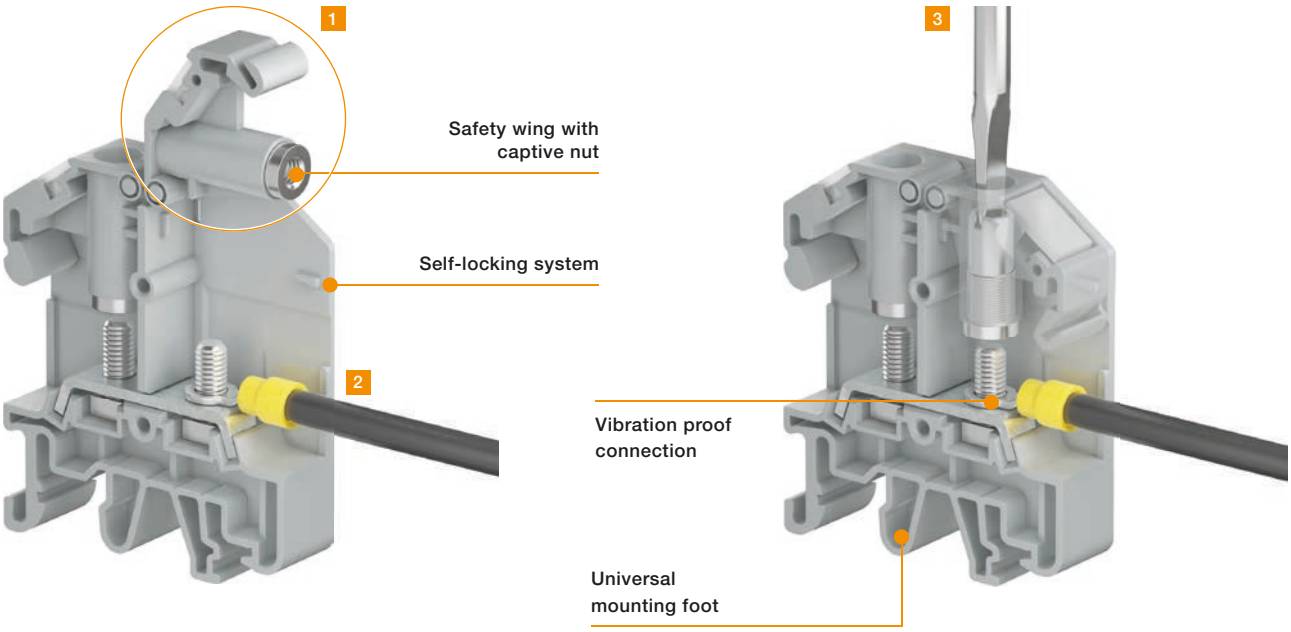

Easy 3 step wiring:

1 Open the safety wing - 2 Hook the wire on the stud and close the wing - 3 Screw down the nut

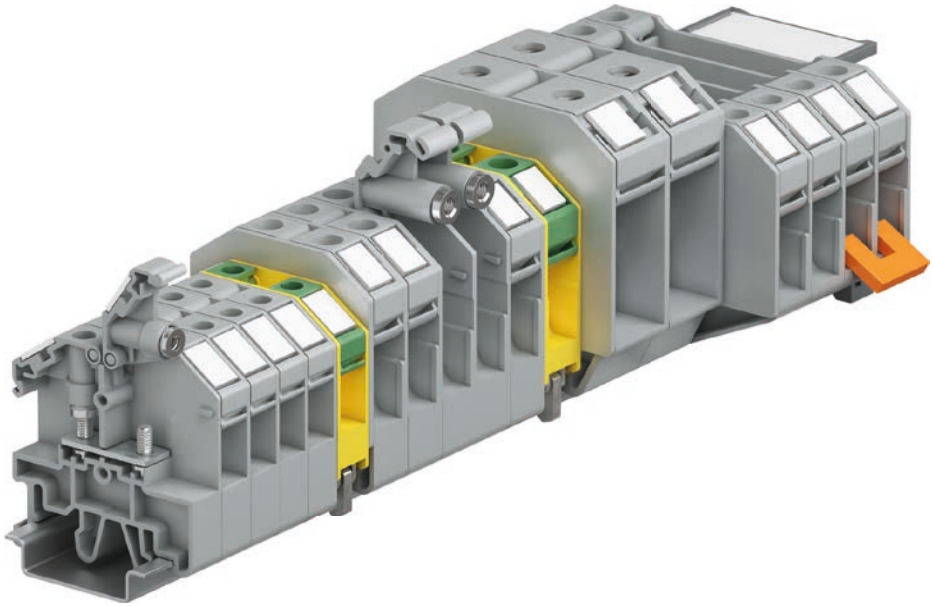

1SNC168021S0201

2.5 mm² 14 AWG

Feed-through

Feed-through
with test sockets

Ground

6 mm² 10 AWG

Feed-through

Feed-through
with test sockets

Ground

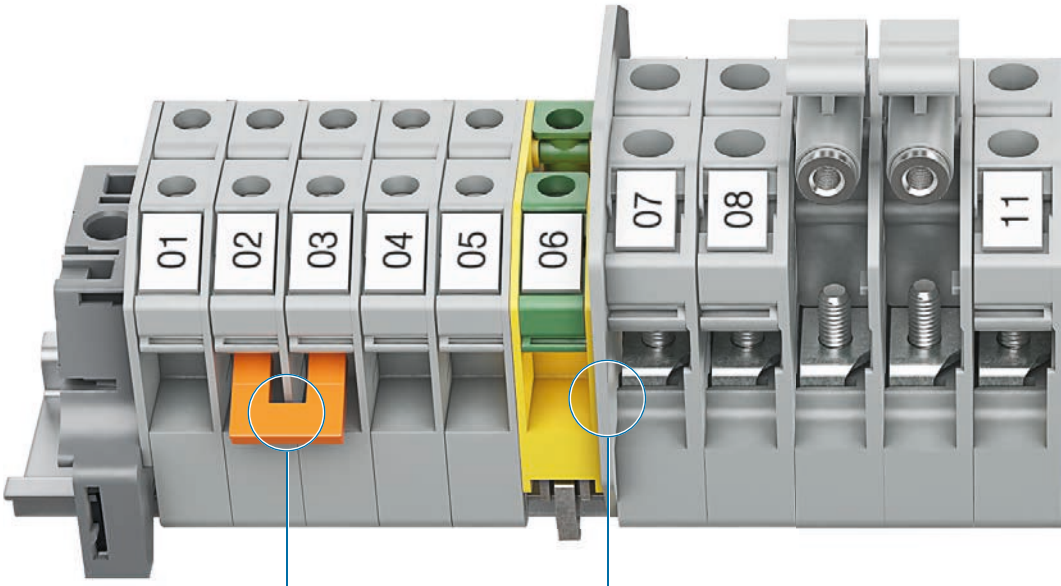

Jumper bars
from 2 to 10 poles

Convenient circuit separator
circuit & voltage separation

25 mm² 4 AWG
Feed-through

6 mm² 10 AWG
Feed-through with test sockets
Disconnect with sliding link

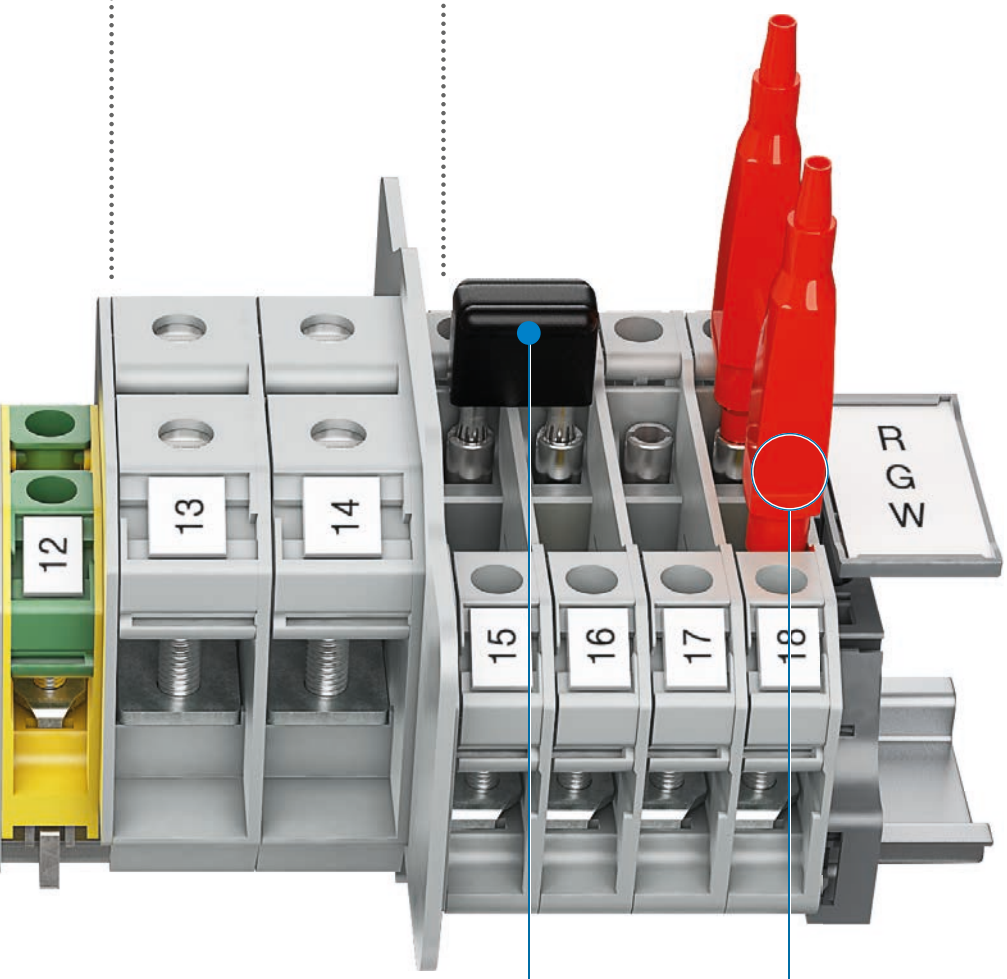

Easy CT short circuiting
with short-circuit plug

Convenient testing
test sockets compatible with
DIA 4 mm test plugs

Qualified for worldwide markets, applications and for severe environments: vibration, shock...

Industry

Ring lug technology is a long time approved technology in the industry (i.e semi conductor production line) for it's proven reliability. The 100% captive connection secures the wiring.

Utility

Thanks to a 100% captive connection our RGW terminal blocks are well adapted to the power, medium and low voltage switchgear panels where a full secured connection is required.

HVAC

RGW terminal blocks are well adapted to HVAC application requesting ring lug terminals providing at the same time a vibration proof connection and increased productivity.

RoHS

1SNC168023S0201

Railway

Rail vehicles are subjected to extreme environmental conditions. RGW terminal blocks are part of the ENTRELEC railway terminal blocks offering, the largest of the market. RGW terminal blocks are tested in accordance with the latest and most demanding standards applying to rolling stock applications.

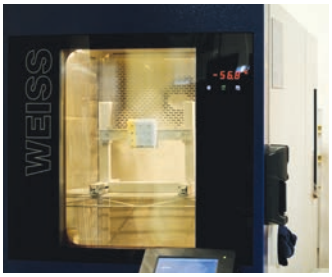

IEC 61373 Railway applications – Rolling stock equipment – Shock and vibration tests
RGW terminal blocks are complying with **category 1 (body mounted) class B.**

EN 45545-2 Railway applications. Fire protection on railway vehicles. Requirements for fire behavior of materials and components
RGW terminal blocks plastic materials are rated **HL3 R22 (the highest Hazard level)**.
They can be used on vehicles for subway, tube, sleeping and couchette.

NF F 16-101 Directive relative to selecting materials in relation to their fire resistance in terms of its behavior in a fire, the opacity of smoke and the toxicity of the gas released.

NF F 16-102 Complement to NF F 16-101. The purpose of this standard is to specify the application of NF F 16-101 to electrical equipment and especially to individual apparatus.
RGW terminal blocks plastic materials are rated **I2F2. Level 3.** This level concern products mounted inside a room for passengers or running crew.

IEC 60068-2.1/IEC 60068-2.2/IEC 60068-2.78/IEC 60068-2.30 : Environmental test
RGW terminal blocks have successfully passed the damp heat, dry heat, cold climatic test.

UL94 (North America) Standard for Safety of Flammability of Plastic Materials for Parts in Devices and Appliances testing
RGW terminal blocks plastic materials are rated **UL94 V0.**

1SNC168034S0201

RGW2.5 Ring lug terminal blocks

Feed-through - 9 mm 0.354 in spacing

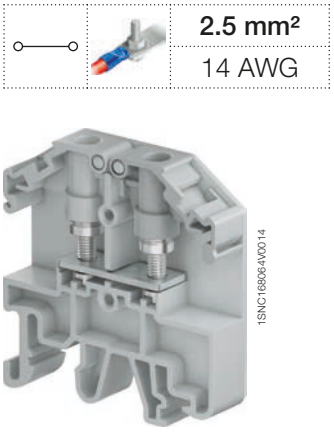

2.5 mm²
14 AWG

1SNC168064V0014

RGW2.5

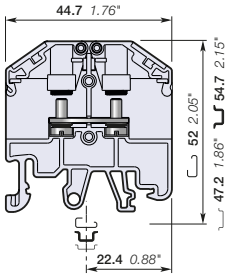

9 mm 0.354 in spacing

Description

- Stud terminal block for ring lug connection,
- Integrated captive nuts in protective wings provide easy and secured connection,
- Universal mounting on symmetrical and asymmetrical rails.

Ordering details

Description		Color	Type	Part Numbers		Pkg qty	Weight (1 pce) g
Feed-through	With 2 studs M3 and captive nuts in wings	Grey	RGW2.5-V0	1SNA510003R0000		45	11.78

Main technical data

		IEC	UL	CSA
Lugs	Rigid: Solid/Stranded	0.1 ... 2.5 mm²	26 ... 14 AWG	26 ... 14 AWG
	Flexible with insulated ferrule	0.1 ... 2.5 mm²		
	Gauge			
Rated current		24 A	15 A	20 A
Maximum current			20 A	
Rated cross section		2.5 mm²	14 AWG	14 AWG
Rated short-time withstand current (1s)		300 A		
Rated voltage		800 V	600 V	600 V
Impulse withstand voltage		8000 V		
Protection		IP10	NEMA 1	

The connecting capacity data for one Rigid: Solid/Stranded, or one Flexible conductor (when applicable) is a mandatory information required by IEC, UL and CSA standards (Copper conductors). All other data are provided as supplementary information only. For more details, please consult our CB, UL or CSA certificates and technical datasheet available on http://www.TE.com

CE RoHS USR CNR CSA

Mounting instructions

Rail	G32, TH 35-7.5, TH 35-15
Nuts Tool	Flat screwdriver Ø 4 mm Ø 0.157 in
Torque	0.6 ... 0.8 N.m 5.3 ... 7.1 lb.in
Max width of lug	7 mm 0.28 in

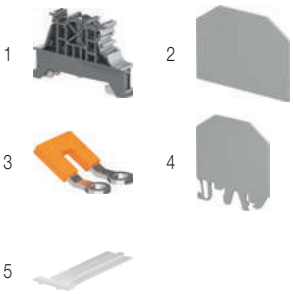

Accessories

	Description			Color	Type	Part Numbers		Pkg qty	Weight (1 pce) g
1	**End stops**	10 mm	0.394 in	Dark grey	BAM4	1SNK900001R0000		50	14.00
2	**End sections**	1.2 mm	0.047 in	Grey	E-RGW2.5	1SNA519003R0000		25	1.89
3	**Lateral jumper bars**	2 poles	24 A (IEC)	Orange	PC-RG2.5-2	1SNA519103R0200		25	3.02
		3 poles	24 A (IEC)		PC-RG2.5-3	1SNA519103R0300		20	4.69
		4 poles	24 A (IEC)		PC-RG2.5-4	1SNA519103R0400		15	6.36
		10 poles	24 A (IEC)		PC-RG2.5-10	1SNA519103R1000		5	16.39
4	**Circuit separators**	1.5 mm	0.059 in	Grey	CS-RGW-S	1SNA519200R0000		25	4.59
5	**Terminal block markers**	Blank marker		White	M-W610PC	1SNA235511R0600		360	8.03
					MG-CPM-01 41090	1SNB041090R0510		1960	0.351

Complete list of accessories is indicated in the terminal block datasheet including end stops.
Some accessories such as jumper bars may modify the terminal block's ratings: Complete information available in the accessories section of the catalog.

Ground Ring lug terminal blocks

Description		Color	Type	Part Numbers		Pkg qty	Weight (1 pce) g
Ground	With 2 studs M3 and captive nuts in wings	Green-yellow	RGW2.5-PE-V0	1SNA511003R0500		45	28.56

1SNC168024S0201

Technical data valid for copper conductors only.

RGW2.5-T Ring lug terminal blocks

Feed-through with test sockets - 9 mm 0.354 in spacing

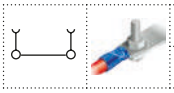

2.5 mm²
14 AWG

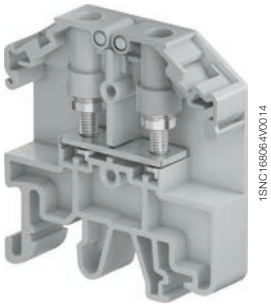

RGW2.5-T

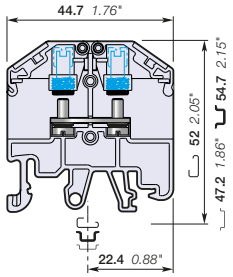

9 mm 0.354 in spacing

Description

- Stud terminal block for ring lug connection,
- Integrated captive nuts in protective wings provide easy and secured connection,
- Ease your test operations with the 2 built-in nuts with test sockets compatible with DIA 2 mm 0.079 in,
- Universal mounting on symmetrical and asymmetrical rails.

Ordering details

Description		Color	Type	Part Number		Pkg qty	Weight (1 pce) g
Feed-through	With 2 studs M3 and captive nuts in wings	Grey	RGW2.5-T-V0	1SNA510103R0000		45	11.58

Main technical data

		IEC	UL	CSA
Lugs	Rigid: Solid/Stranded	0.1 ... 2.5 mm²	26 ... 14 AWG	26 ... 14 AWG
	Flexible with insulated ferrule	0.1 ... 2.5 mm²		
	Gauge			
Rated current		24 A	15 A	20 A
Maximum current			20 A	
Rated cross section		2.5 mm²	14 AWG	14 AWG
Rated short-time withstand current (1s)		300 A		
Rated voltage		800 V	600 V	600 V
Impulse withstand voltage		8000 V		
Protection		IP10	NEMA 1	

Mounting instructions

Rail		G32, TH 35-7.5, TH 35-15
Nuts Tool		Flat screwdriver Ø 4 mm Ø 0.157 in
Torque		0.6 ... 0.8 N.m 5.3 ... 7.1 lb.in
Max width of lug		7 mm 0.28 in

The connecting capacity data for one Rigid: Solid/Stranded, or one Flexible conductor (when applicable) is a mandatory information required by IEC, UL and CSA standards (Copper conductors). All other data are provided as supplementary information only. For more details, please consult our CB, UL or CSA certificates and technical datasheet available on http://www.TE.com

CE RoHS USR CNR CSA

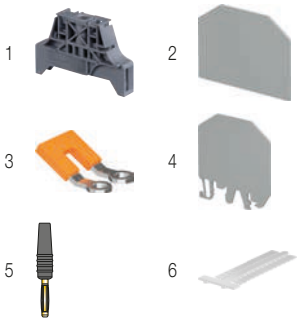

Accessories

	Description			Color	Type	Part Number		Pkg qty	Weight (1 pce) g
1	**End stops**	10 mm	0.394 in	Dark grey	BAM4	1SNK900001R0000		50	14.00
2	**End sections**	1.2 mm	0.047 in	Grey	E-RGW2.5	1SNA519003R0000		25	1.89
3	**Lateral jumper bars**	2 poles	24 A (IEC)	Orange	PC-RG2.5-2	1SNA519103R0200		25	3.02
		3 poles	24 A (IEC)		PC-RG2.5-3	1SNA519103R0300		20	4.69
		4 poles	24 A (IEC)		PC-RG2.5-4	1SNA519103R0400		15	6.36
		10 poles	24 A (IEC)		PC-RG2.5-10	1SNA519103R1000		5	16.39
4	**Circuit separators**	1.5 mm	0.059 in	Grey	CS-RGW-S	1SNA519200R0000		25	4.59
5	**Test plugs**	DIA 2 mm 0.079 in		Black	FC2.MC	1SNA107239R0300		20	1.00
6	**Terminal block markers**	Blank marker		White	M-W610PC	1SNA235511R0600		360	8.03
					MG-CPM-01 41090	1SNB041090R0510		1960	0.351

Complete list of accessories is indicated in the terminal block datasheet including end stops.
Some accessories such as jumper bars may modify the terminal block's ratings: Complete information available in the accessories section of the catalog.

Ground Ring lug terminal blocks

Description		Color	Type	Part Number		Pkg qty	Weight (1 pce) g
Ground	With 2 studs M3 and captive nuts in wings	Green-yellow	RGW2.5-PE-V0	1SNA511003R0500		45	28.56

1SNC168025S0201

Technical data valid for copper conductors only.

RGW6 Ring lug terminal blocks

Feed-through - 11 mm 0.433 in spacing

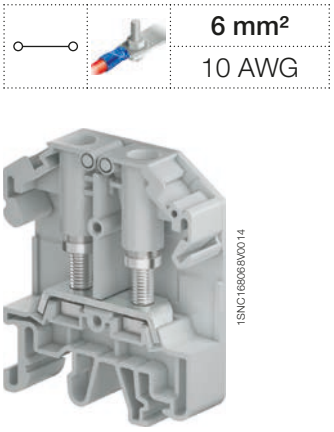

RGW6

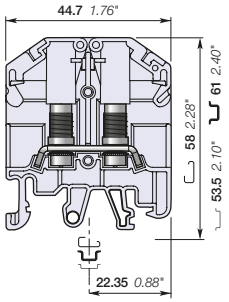

11 mm 0.433 in spacing

6 mm²
10 AWG

Description

- Stud terminal block for ring lug connection,
- Integrated captive nuts in protective wings provide easy and secured connection,
- Universal mounting on symmetrical and asymmetrical rails.

Ordering details

Description		Color	Type	Part Numbers		Pkg qty	Weight (1 pce) g
Feed-through	With 2 studs M4 and captive nuts in wings	Grey	RGW6-V0	1SNA510024R0000		40	19.76

Main technical data

		IEC	UL	CSA
Lugs	Rigid: Solid/Stranded	0.1 ... 6 mm²	22 ... 10 AWG	22 ... 10 AWG
	Flexible with insulated ferrule	0.1 ... 6 mm²		
	Gauge			
Rated current		41 A	30 A	30 A
Maximum current			30 A	
Rated cross section		6 mm²	10 AWG	10 AWG
Rated short-time withstand current (1s)		720 A		
Rated voltage		800 V	600 V	600 V
Impulse withstand voltage		8000 V		
Protection		IP10	NEMA 1	

Mounting instructions

Rail	G32, TH 35-7.5, TH 35-15
Nuts	Flat screwdriver
Tool	Ø 5.5 mm Ø 0.217 in
Torque	0.8 ... 1.2 N.m 7.1 ... 10.6 lb.in
Max width of lug	9.4 mm 0.37 in

The connecting capacity data for one Rigid: Solid/Stranded, or one Flexible conductor (when applicable) is a mandatory information required by IEC, UL and CSA standards (Copper conductors). All other data are provided as supplementary information only. For more details, please consult our CB, UL or CSA certificates and technical datasheet available on http://www.TE.com

CE RoHS USR CNR CSA

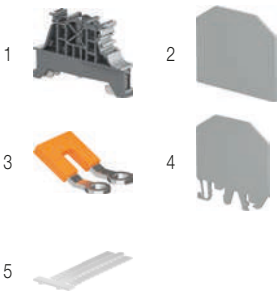

Accessories

	Description			Color	Type	Part Numbers		Pkg qty	Weight (1 pce) g
1	**End stops**	10 mm	0.394 in	Dark grey	BAM4	1SNK900001R0000		50	14.00
2	**End sections**	1.4 mm	0.055 in	Grey	E-RGW6	1SNA519004R0000		50	2.65
3	**Lateral jumper bars**	2 poles	41 A (IEC)	Orange	PC-RG6-2	1SNA519104R0200		25	3.44
		3 poles	41 A (IEC)		PC-RG6-3	1SNA519104R0300		20	5.40
		4 poles	41 A (IEC)		PC-RG6-4	1SNA519104R0400		15	7.33
		7 poles	41 A (IEC)		PC-RG6-7	1SNA519104R0700		5	13.24
		10 poles	41 A (IEC)		PC-RG6-10	1SNA519104R1000		5	19.05
4	**Circuit separators**	1.5 mm	0.059 in	Grey	CS-RGW-S	1SNA519200R0000		25	4.59
5	**Terminal block markers**	Blank marker		White	M-W810PC	1SNA235510R0800		260	0.27
					MG-CPM-01 41096	1SNB041096R0810		1120	0.400

Complete list of accessories is indicated in the terminal block datasheet including end stops.
Some accessories such as jumper bars may modify the terminal block's ratings: Complete information available in the accessories section of the catalog.

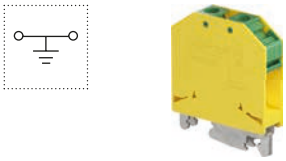

Ground Ring lug terminal blocks

Description		Color	Type	Part Numbers		Pkg qty	Weight (1 pce) g
Ground	With 2 studs M4 and captive nuts in wings	Green-yellow	RGW6-PE-V0	1SNA511024R0500		40	31.76

1SNC168016S0201

Technical data valid for copper conductors only.

RGW6-T Ring lug terminal blocks

Feed-through with test sockets - 11 mm 0.433 in spacing

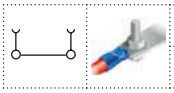

6 mm²
10 AWG

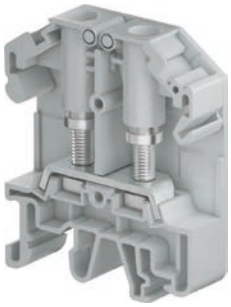

1SNC168068V0014

RGW6-T

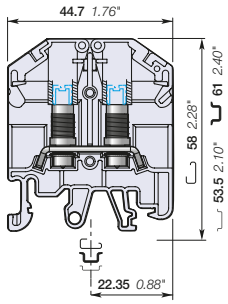

11 mm 0.433 in spacing

Description

- Stud terminal block for ring lug connection,
- Integrated captive nuts in protective wings provide easy and secured connection,
- Ease your test operations with the 2 built-in nuts with test sockets compatible with DIA 4 mm 0.157 in,
- Universal mounting on symmetrical and asymmetrical rails.

Ordering details

Description		Color	Type	Part Number		Pkg qty	Weight (1 pce) g
Feed-through	With 2 studs M4 and captive nuts in wings	Grey	RGW6-T-V0	1SNA510124R0000		40	19.04

Main technical data

		IEC	UL	CSA
Lugs	Rigid: Solid/Stranded	0.1 ... 6 mm²	22 ... 10 AWG	22 ... 10 AWG
	Flexible with insulated ferrule	0.1 ... 6 mm²		
	Gauge			
Rated current		41 A	30 A	30 A
Maximum current			30 A	
Rated cross section		6 mm²	10 AWG	10 AWG
Rated short-time withstand current (1s)		720 A		
Rated voltage		800 V	600 V	600 V
Impulse withstand voltage		8000 V		
Protection		IP10	NEMA 1	

Mounting instructions

Rail	G32, TH 35-7.5, TH 35-15
Nuts Tool	Flat screwdriver Ø 5.5 mm Ø 0.217 in
Torque	0.8 ... 1.2 N.m 7.1 ... 10.6 lb.in
Max width of lug	9.4 mm 0.37 in

The connecting capacity data for one Rigid: Solid/Stranded, or one Flexible conductor (when applicable) is a mandatory information required by IEC, UL and CSA standards (Copper conductors). All other data are provided as supplementary information only. For more details, please consult our CB, UL or CSA certificates and technical datasheet available on http://www.TE.com

CE RoHS USR CNR CSA

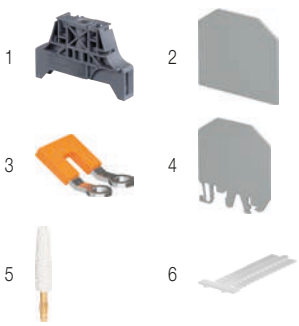

Accessories

	Description			Color	Type	Part Number		Pkg qty	Weight (1 pce) g
1	**End stops**	10 mm	0.394 in	Dark grey	BAM4	1SNK900001R0000		50	14.00
2	**End sections**	1.4 mm	0.055 in	Grey	E-RGW6	1SNA519004R0000		50	2.65
3	**Lateral jumper bars**	2 poles	41 A (IEC)	Orange	PC-RG6-2	1SNA519104R0200		25	3.44
		3 poles	41 A (IEC)		PC-RG6-3	1SNA519104R0300		20	5.40
		4 poles	41 A (IEC)		PC-RG6-4	1SNA519104R0400		15	7.33
		7 poles	41 A (IEC)		PC-RG6-7	1SNA519104R0700		5	13.24
		10 poles	41 A (IEC)		PC-RG6-10	1SNA519104R1000		5	19.05
4	**Circuit separators**	1.5 mm	0.059 in	Grey	CS-RGW-S	1SNA519200R0000		25	4.59
5	**Test plugs**	DIA 4 mm 0.157 in		White	FC4	1SNA167860R0100		10	10.00
6	**Terminal block markers**	Blank marker		White	M-W810PC	1SNA235510R0800		260	0.27
					MG-CPM-01 41096	1SNB041096R0810		1120	0.400

Complete list of accessories is indicated in the terminal block datasheet including end stops.
Some accessories such as jumper bars may modify the terminal block's ratings: Complete information available in the accessories section of the catalog.

Ground Ring lug terminal blocks

Description		Color	Type	Part Number		Pkg qty	Weight (1 pce) g
Ground	With 2 studs M4 and captive nuts in wings	Green-yellow	RGW6-PE-V0	1SNA511024R0500		40	31.76

1SNC168019S0201

Technical data valid for copper conductors only.

RGW25-M5 Ring lug terminal blocks

Feed-through - 18 mm 0.709 in spacing

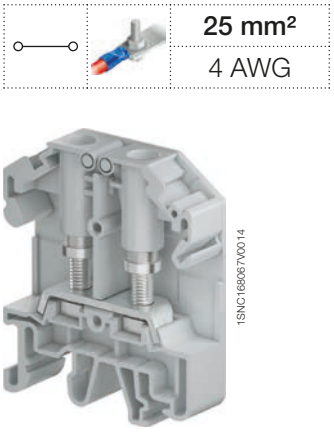

RGW25-M5

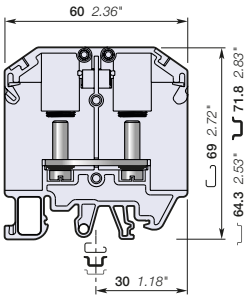

18 mm 0.709 in spacing

25 mm²

4 AWG

Description

- Stud terminal block for ring lug connection,
- Integrated captive nuts in protective wings provide easy and secured connection,
- Universal mounting on symmetrical and asymmetrical rails.

Ordering details

Description		Color	Type	Part Numbers		Pkg qty	Weight (1 pce) g
Feed-through	With 2 studs M5 and captive nuts in wings	Grey	RGW25-M5-V0	1SNA510005R0000		10	49.10

Main technical data

		IEC	UL	CSA
Lugs	Rigid: Solid/Stranded	0.1 ... 25 mm²	26 ... 4 AWG	26 ... 4 AWG
	Flexible with insulated ferrule	0.1 ... 25 mm²		
	Gauge			
Rated current		101 A	85 A	100 A
Maximum current			115 A	
Rated cross section		25 mm²	4 AWG	4 AWG
Rated short-time withstand current (1s)		3000 A		
Rated voltage		800 V	600 V	600 V
Impulse withstand voltage		8000 V		
Protection		IP10	NEMA 1	

Mounting instructions

Rail	G32, TH 35-7.5, TH 35-15
Nuts Tool	Flat screwdriver Ø 5.5 mm Ø 0.217 in
Torque	3 ... 3.5 N.m 26.5 ...31 lb.in
Max width of lug	16.2 mm 0.64 in

The connecting capacity data for one Rigid: Solid/Stranded, or one Flexible conductor (when applicable) is a mandatory information required by IEC, UL and CSA standards (Copper conductors). All other data are provided as supplementary information only. For more details, please consult our CB, UL or CSA certificates and technical datasheet available on http://www.TE.com

CE RoHS USR CNR CSA

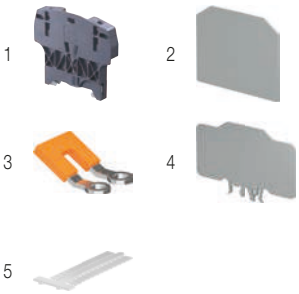

Accessories

	Description			Color	Type	Part Numbers		Pkg qty	Weight (1 pce) g
1	**End stops**	10 mm	0.394 in	Dark grey	BAZH1	1SNK900102R0000		20	24.00
2	**End sections**	1.4 mm	0.055 in	Grey	E-RGW25	1SNA519005R0000		25	0.146
3	**Lateral jumper bars**	2 poles	101 A (IEC)	Orange	PC-RG25-2	1SNA519106R0200		25	8.81
4	**Circuit separators**	2 mm	0.079 in	Grey	CS-RGW-L	1SNA519201R0000		25	13.72
5	**Terminal block markers**	Blank marker		White	M-W1010PC	1SNA235512R1000		200	0.10
					MG-CPM-01 41096	1SNB041096R0810		1120	0.400

Complete list of accessories is indicated in the terminal block datasheet including end stops.
Some accessories such as jumper bars may modify the terminal block's ratings: Complete information available in the accessories section of the catalog.

1SNC168028S0201

Technical data valid for copper conductors only.

RGW25-M6 Ring lug terminal blocks

Feed-through - 18 mm 0.709 in spacing

25 mm²
4 AWG

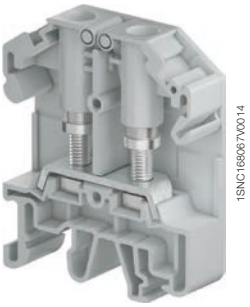

RGW25-M6

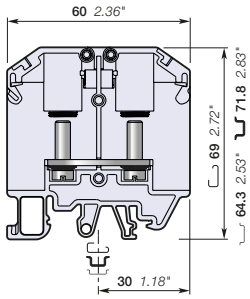

18 mm 0.709 in spacing

Description

- Stud terminal block for ring lug connection,
- Integrated captive nuts in protective wings provide easy and secured connection,
- Universal mounting on symmetrical and asymmetrical rails.

Ordering details

Description		Color	Type	Part Numbers		Pkg qty	Weight (1 pce) g
Feed-through	With 2 studs M6 and captive nuts in wings	Grey	RGW25-M6-V0	1SNA510006R0000		10	48.44

Main technical data

		IEC	UL	CSA
Lugs	Rigid: Solid/Stranded	0.1 ... 25 mm²	26 ... 4 AWG	26 ... 4 AWG
	Flexible with insulated ferrule	0.1 ... 25 mm²		
	Gauge			
Rated current		101 A	85 A	100 A
Maximum current			115 A	
Rated cross section		25 mm²	4 AWG	4 AWG
Rated short-time withstand current (1s)		3000 A		
Rated voltage		800 V	600 V	600 V
Impulse withstand voltage		8000 V		
Protection		IP10	NEMA 1	

Mounting instructions

Rail	G32, TH 35-7.5, TH 35-15
Nuts	Flat screwdriver
Tool	Ø 5.5 mm Ø 0.217 in
Torque	3.2 ... 3.5 N.m 28.3 ...32.7 lb.in
Max width of lug	16.2 mm 0.64 in

The connecting capacity data for one Rigid: Solid/Stranded, or one Flexible conductor (when applicable) is a mandatory information required by IEC, UL and CSA standards (Copper conductors). All other data are provided as supplementary information only. For more details, please consult our CB, UL or CSA certificates and technical datasheet available on http://www.TE.com

CE RoHS USR CNR CSA

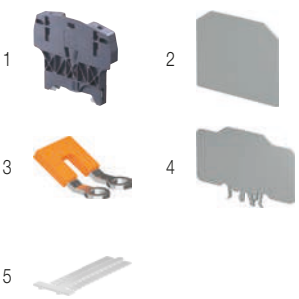

Accessories

	Description			Color	Type	Part Numbers		Pkg qty	Weight (1 pce) g
1	**End stops**	10 mm	0.394 in	Dark grey	BAZH1	1SNK900102R0000		20	24.00
2	**End sections**	1.4 mm	0.055 in	Grey	E-RGW25	1SNA519005R0000		25	0.146
3	**Lateral jumper bars**	2 poles	101 A (IEC)	Orange	PC-RG25-2	1SNA519106R0200		25	8.81
4	**Circuit separators**	2 mm	0.079 in	Grey	CS-RGW-L	1SNA519201R0000		25	13.72
5	**Terminal block markers**	Blank marker		White	M-W1010PC	1SNA235512R1000		200	0.10
					MG-CPM-01 41096	1SNB041096R0810		1120	0.400

Complete list of accessories is indicated in the terminal block datasheet including end stops.
Some accessories such as jumper bars may modify the terminal block's ratings: Complete information available in the accessories section of the catalog.

Technical data valid for copper conductors only.

1SNC168029S0201

RGW2.5-PE Ring lug terminal blocks

Ground - 10 mm 0.394 in spacing

RGW2.5-PE

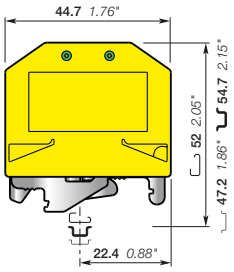

10 mm 0.394 in spacing

2.5 mm²
14 AWG

Description

- Stud terminal block for ring lug connection,
- Integrated captive nuts in protective wings provide easy and secured connection,
- Universal mounting on symmetrical and asymmetrical rails.

Ordering details

Description		Color	Type	Part Number		Pkg qty	Weight (1 pce) g
Ground	With 2 studs M3 and captive nuts in wings	Green-yellow	RGW2.5-PE-V0	1SNA511003R0500		45	28.56

Main technical data

		IEC	UL	CSA
Lugs	Rigid: Solid/Stranded	0.1 … 2.5 mm²	26 ... 14 AWG	26 ... 14 AWG
	Flexible with insulated ferrule	0.1 … 2.5 mm²		
	Gauge			
Rated cross section		2.5 mm²	14 AWG	14 AWG
Rated short-time withstand current (1s)		300 A		
Protection		IP10	NEMA 1	

Mounting instructions

Rail	G32, TH 35-7.5, TH 35-15
Nuts Tool	Flat screwdriver Ø 4 mm Ø 0.157 in
Torque	0.6 ... 0.8 N.m 5.3 ... 7.1 lb.in
Rail connection screw Tool	Flat screwdriver Ø 4 mm Ø 0.157 in
Torque	0.5 ... 0.6 N.m 4.4 ... 5.3 lb.in
Max width of lug	7 mm 0.28 in

The connecting capacity data for one Rigid: Solid/Stranded, or one Flexible conductor (when applicable) is a mandatory information required by IEC, UL and CSA standards (Copper conductors). All other data are provided as supplementary information only. For more details, please consult our CB, UL or CSA certificates and technical datasheet available on http://www.TE.com

CE RoHS USR CNR CSA

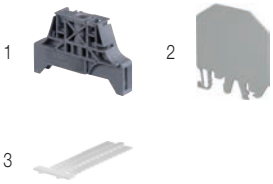

Accessories

	Description			Color	Type	Part Number		Pkg qty	Weight (1 pce) g
1	**End stops**	10 mm	0.394 in	Dark grey	BAM4	1SNK900001R0000		50	14.00
2	**Circuit separators**	1.5 mm	0.059 in	Grey	CS-RGW-S	1SNA519200R0000		25	4.59
3	**Terminal block markers**	Blank marker		White	M-W610PC	1SNA235511R0600		360	8.03
					MG-CPM-01 41090	1SNB041090R0510		1960	0.351

Complete list of accessories is indicated in the terminal block datasheet including end stops.
Some accessories such as jumper bars may modify the terminal block's ratings: Complete information available in the accessories section of the catalog.

1SNC168026S0201

Technical data valid for copper conductors only.

RGW6-PE Ring lug terminal blocks

Ground - 12 mm 0.472 in spacing

RGW6-PE

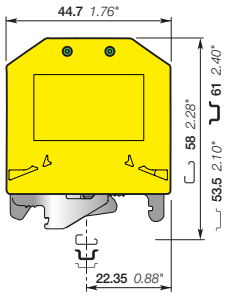

12 mm 0.472 in spacing

	6 mm²
	10 AWG

Description

- Stud terminal block for ring lug connection,
- Integrated captive nuts in protective wings provide easy and secured connection,
- Universal mounting on symmetrical and asymmetrical rails.

Ordering details

Description		Color	Type	Part Number		Pkg qty	Weight (1 pce) g
Ground	With 2 studs M4 and captive nuts in wings	Green-yellow	RGW6-PE-V0	1SNA511024R0500		40	31.76

Main technical data

		IEC	UL	CSA
Lugs	Rigid: Solid/Stranded	0.1 ... 6 mm²	22 ... 10 AWG	22 ... 10 AWG
	Flexible with insulated ferrule	0.1 ... 6 mm²		
	Gauge			
Rated cross section		6 mm²	10 AWG	10 AWG
Rated short-time withstand current (1s)		720 A		
Protection		IP10	NEMA 1	

Mounting instructions

Rail		G32, TH 35-7.5, TH 35-15
Nuts Tool		Flat screwdriver Ø 5.5 mm Ø 0.217 in
Torque		0.8 ... 1.2 N.m 7.1 ... 10.6 lb.in
Rail connection screw Tool		Flat screwdriver Ø 4 mm Ø 0.157 in
Torque		0.5 ... 0.8 N.m 4.4 ... 5.3 lb.in
Max width of lug		9.4 mm 0.37 in

The connecting capacity data for one Rigid: Solid/Stranded, or one Flexible conductor (when applicable) is a mandatory information required by IEC, UL and CSA standards (Copper conductors). All other data are provided as supplementary information only. For more details, please consult our CB, UL or CSA certificates and technical datasheet available on http://www.TE.com

CE RoHS USR CNR CSA

1

2

3

Accessories

	Description			Color	Type	Part Number		Pkg qty	Weight (1 pce) g
1	**End stops**	10 mm	0.394 in	Dark grey	BAM4	1SNK900001R0000		50	14.00
2	**Circuit separators**	1.5 mm	0.059 in	Grey	CS-RGW-S	1SNA519200R0000		25	4.59
3	**Terminal block markers**	Blank marker		White	M-W810PC	1SNA235510R0800		260	0.27
					MG-CPM-01 41096	1SNB041096R0810		1120	0.400

Complete list of accessories is indicated in the terminal block datasheet including end stops.
Some accessories such as jumper bars may modify the terminal block's ratings: Complete information available in the accessories section of the catalog.

1SNC168017S0201

Technical data valid for copper conductors only.

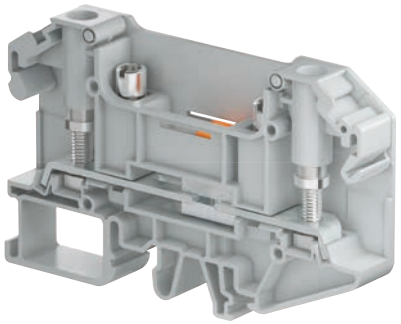

Secure your measurement operations

With its 100% captive wire connection, RGW test & measurement terminal blocks offer a safe and ergonomic test measurement operation.

High performances

- 6 mm² 10 AWG
- 41 A (IEC) 30 A (UL)
- 1000 V (IEC) 600V (UL).

Features

- Test sockets provided on every disconnect blocks RGW6-ST-1…
- Aligned feed-through version RGW6-R1… available for all types of schematics.

Typical measurement configuration

Common point on the transformers

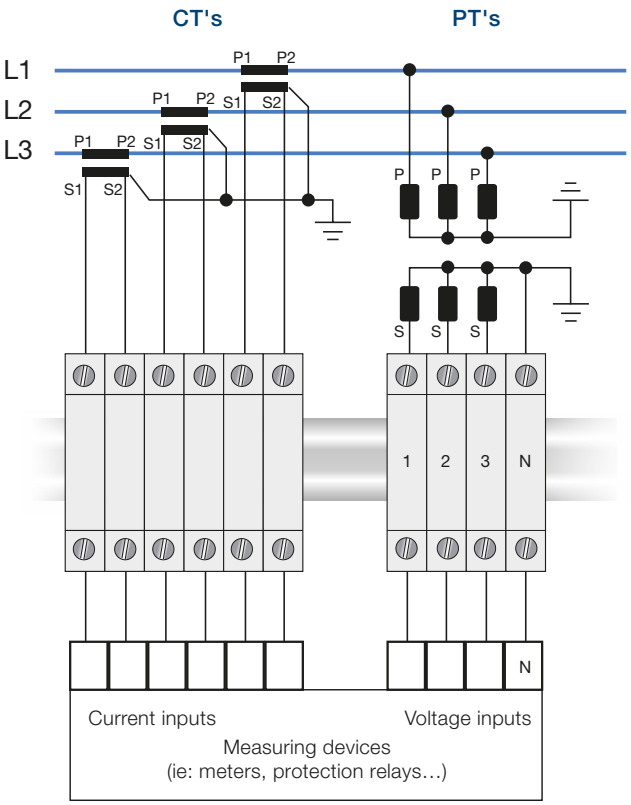

Bill of material

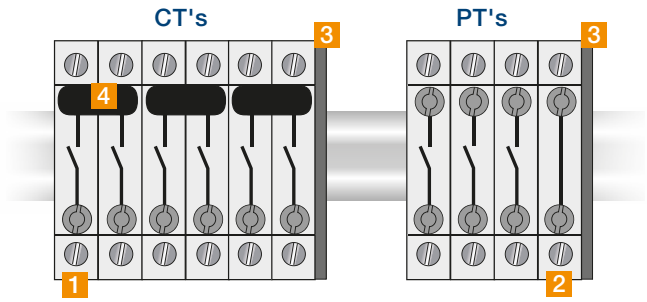

	Description	Type	Order code	Qty needed CT's	Qty needed PT's
1	Terminal block	RGW6-ST-1-V0	1SNA512124R0000	6	3
2	Terminal block	RGW6-R1-V0	1SNA510224R0000	0	1
3	End section	E-RGW6-ST	1SNA519004R0100	1	1
4	Short-circuit plug	SCP12-2	1SNA519300R0200	3	0

1SNC168038S0201

RGW6-ST-1 Ring lug terminal blocks

Test disconnect with sliding link - 11 mm 0.433 in spacing

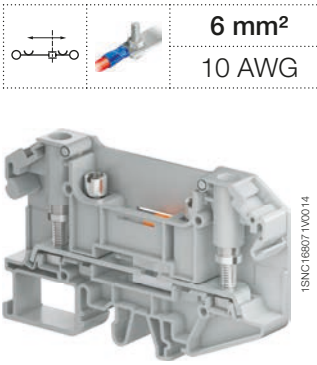

6 mm²
10 AWG

1SNC168071V0014

RGW6-ST-1

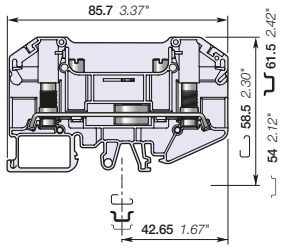

11 mm 0.433 in spacing

Description

- Stud terminal block for ring lug connection,
- Integrated captive nuts in protective wings provide easy and secured connection,
- Secure your disconnect operations with the disconnect sliding link operated with a standard screwdriver,
- Ease your test operations with the 2 independent built-in test sockets compatible with DIA 4 mm 0.157 in test plugs,
- Universal mounting on symmetrical and asymmetrical rails.

Ordering details

Description		Color	Type	Part Number		Pkg qty	Weight (1 pce) g
Disconnect	With 2 studs M4 and captive nuts in wings	Grey	RGW6-ST-1-V0	1SNA512124R0000		25	33.66

Main technical data

		IEC	UL	CSA
Lugs	Rigid: Solid/Stranded	0.1 ... 6 mm²	22 ... 10 AWG	22 ... 10 AWG
	Flexible with insulated ferrule	0.1 ... 6 mm²		
	Gauge			
Rated current		41 A	30 A	30 A
Maximum current			30 A	
Rated cross section		6 mm²	10 AWG	10 AWG
Rated voltage		1000 V	600 V	600 V
Rated short-time withstand current (1s)		720 A		
Impulse withstand voltage		8000 V		
Protection		IP10	NEMA 1	

Mounting instructions

Rail	G32, TH 35-7.5, TH 35-15
Nuts	Flat screwdriver
Tool	Ø 5.5 mm Ø 0.217 in
Torque	0.8 ... 1.2 N.m 7.1 ... 10.6 lb.in
Disconnect device	Flat screwdriver
Tool	Ø 4 mm Ø 0.157 in
Torque	0.5 ... 0.8 N.m 4.4 ... 5.3 lb.in
Max width of lug	9.4 mm 0.37 in

The connecting capacity data for one Rigid: Solid/Stranded, or one Flexible conductor (when applicable) is a mandatory information required by IEC, UL and CSA standards (Copper conductors). All other data are provided as supplementary information only. For more details, please consult our CB, UL or CSA certificates and technical datasheet available on http://www.TE.com

CE RoHS USR CNR CSA

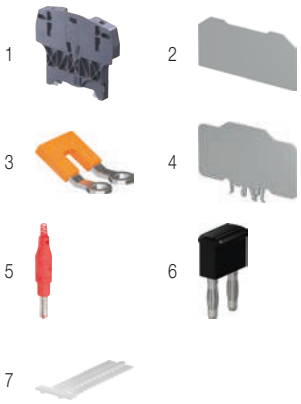

Accessories

	Description			Color	Type	Part Number		Pkg qty	Weight (1 pce) g
1	**End stops**	10 mm	0.394 in	Dark grey	BAZH1	1SNK900102R0000		20	24.00
2	**End sections**	1.4 mm	0.055 in	Grey	E-RGW6-ST	1SNA519004R0100		25	5.18
3	**Lateral jumper bars**	2 poles	41 A (IEC)	Orange	PC-RG6-2	1SNA519104R0200		25	3.44
		3 poles	41 A (IEC)		PC-RG6-3	1SNA519104R0300		20	5.40
		4 poles	41 A (IEC)		PC-RG6-4	1SNA519104R0400		15	7.33
		7 poles	41 A (IEC)		PC-RG6-7	1SNA519104R0700		5	13.24
		10 poles	41 A (IEC)		PC-RG6-10	1SNA519104R1000		5	19.05
4	**Circuit separators**	2 mm	0.079 in	Grey	CS-RGW-L	1SNA519201R0000		25	13.72
5	**Test plugs**	DIA 4 mm 0.157 in IP20		Red	FC4-1	1SNA167927R1000		10	11.00
6	**Short circuit plugs**			Black	SCP12-2	1SNA519300R0200		10	
7	**Terminal block markers**	Blank marker		White	M-W810PC	1SNA235510R0800		260	0.27
					MG-CPM-01 41096	1SNB041096R0810		1120	0.400

Complete list of accessories is indicated in the terminal block datasheet including end stops.
Some accessories such as jumper bars may modify the terminal block's ratings: Complete information available in the accessories section of the catalog.

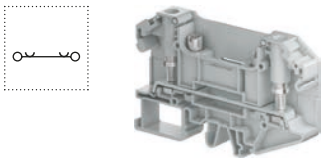

Feed-through Ring lug terminal blocks

Description		Color	Type	Part Number		Pkg qty	Weight (1 pce) g
Feed-through	With 2 studs M4 and captive nuts in wings	Grey	RGW6-R1-V0	1SNA510224R0000		25	36.42

Technical data valid for copper conductors only.

1SNC168018S0201

RGW6-R1 Ring lug terminal blocks

Feed-through - 11 mm 0.433 in spacing

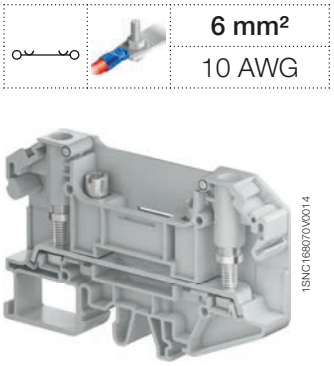

6 mm²
10 AWG

1SNC168070V0014

RGW6-R1

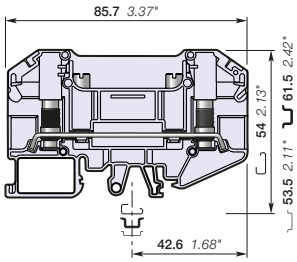

11 mm 0.433 in spacing

Description

- Stud terminal block for ring lug connection,
- Feed-through with the same profile as disconnect terminal block RGW6-ST-1…,
- Integrated captive nuts in protective wings provide easy and secured connection,
- Universal mounting on symmetrical and asymmetrical rails.

Ordering details

Description		Color	Type	Part Number		Pkg qty	Weight (1 pce) g
Feed-through	With 2 studs M4 and captive nuts in wings	Grey	RGW6-R1-V0	1SNA510224R0000		25	36.42

Main technical data

		IEC	UL	CSA
Lugs	Rigid: Solid/Stranded	0.1 … 6 mm²	22 … 10 AWG	22 … 10 AWG
	Flexible with insulated ferrule	0.1 … 6 mm²		
	Gauge			
Rated current		41 A	30 A	30 A
Maximum current			30 A	
Rated cross section		6 mm²	10 AWG	10 AWG
Rated short-time withstand current (1s)		720 A		
Rated voltage		1000 V	600 V	600 V
Impulse withstand voltage		8000 V		
Protection		IP10	NEMA 1	

The connecting capacity data for one Rigid: Solid/Stranded, or one Flexible conductor (when applicable) is a mandatory information required by IEC, UL and CSA standards (Copper conductors). All other data are provided as supplementary information only. For more details, please consult our CB, UL or CSA certificates and technical datasheet available on http://www.TE.com

CE RoHS USR CNR CSA

Mounting instructions

Rail	G32, TH 35-7.5, TH 35-15
Nuts	Flat screwdriver
Tool	Ø 5.5 mm Ø 0.217 in
Torque	0.8 … 1.2 N.m 7.1 … 10.6 lb.in
Max width of lug	9.4 mm 0.37 in

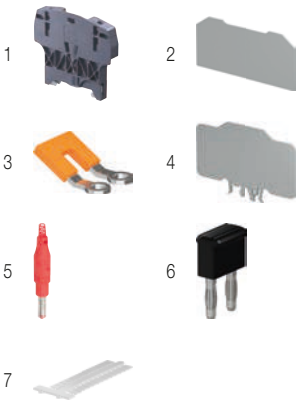

Accessories

	Description			Color	Type	Part Number		Pkg qty	Weight (1 pce) g
1	**End stops**	10 mm	0.394 in	Dark grey	BAZH1	1SNK900102R0000		20	24.00
2	**End sections**	1.4 mm	0.055 in	Grey	E-RGW6-ST	1SNA519004R0100		25	5.18
3	**Lateral jumper bars**	2 poles	41 A (IEC)	Orange	PC-RG6-2	1SNA519104R0200		25	3.44
		3 poles	41 A (IEC)		PC-RG6-3	1SNA519104R0300		20	5.40
		4 poles	41 A (IEC)		PC-RG6-4	1SNA519104R0400		15	7.33
		7 poles	41 A (IEC)		PC-RG6-7	1SNA519104R0700		5	13.24
		10 poles	41 A (IEC)		PC-RG6-10	1SNA519104R1000		5	19.05
4	**Circuit separators**	2 mm	0.079 in	Grey	CS-RGW-L	1SNA519201R0000		25	13.72
5	**Test plugs**	DIA 4 mm	0.157 in IP20	Red	FC4-1	1SNA167927R1000		10	11.00
6	**Short circuit plugs**			Black	SCP12-2	1SNA519300R0200		10	
7	**Terminal block markers**	Blank marker		White	M-W810PC	1SNA235510R0800		260	0.27
					MG-CPM-01 41096	1SNB041096R0810		1120	0.400

Complete list of accessories is indicated in the terminal block datasheet including end stops.
Some accessories such as jumper bars may modify the terminal block's ratings: Complete information available in the accessories section of the catalog.

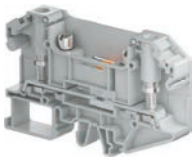

Disconnect Ring lug terminal blocks

Description		Color	Type	Part Number		Pkg qty	Weight (1 pce) g
Disconnect	With 2 studs M4 and captive nuts in wings	Grey	RGW6-ST-1-V0	1SNA512124R0000		25	33.66

1SNC168027S0201

Technical data valid for copper conductors only.

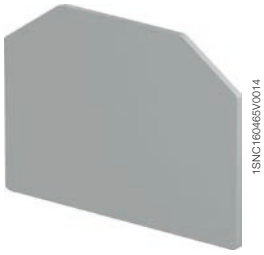

E-RGW2.5

E-RGW2.5 end sections

Description

– End section compatible with RGW2.5... and RGW2.5-T... terminal block

Ordering details

Description	Color	Type	Part Number		Pkg qty	Weight (1 pce) g
1.2 mm 0.047 in spacing	Grey	E-RGW2.5	1SNA519003R0000		25	1.89

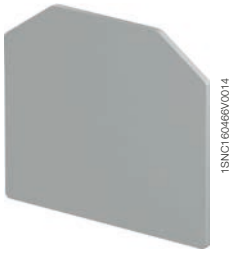

E-RGW6

E-RGW6 end sections

Description

– End section compatible with RGW6... and RGW6-T... terminal block

Ordering details

Description	Color	Type	Part Number		Pkg qty	Weight (1 pce) g
1.4 mm 0.0551 in spacing	Grey	E-RGW6	1SNA519004R0000		50	2.65

E-RGW6-ST

E-RGW6-ST end sections

Description

– End section compatible with RGW6-ST-1… and RGW6-R1... terminal block

Ordering details

Description	Color	Type	Part Number		Pkg qty	Weight (1 pce) g
1.4 mm 0.0551 in spacing	Grey	E-RGW6-ST	1SNA519004R0100		25	5.18

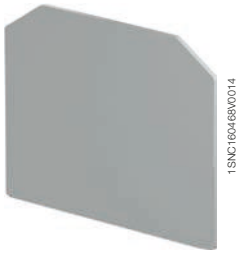

E-RGW25

E-RGW25 end sections

Description

– End section compatible with RGW25... terminal block

Ordering details

Description	Color	Type	Part Number		Pkg qty	Weight (1 pce) g
1.4 mm 0.0551 in spacing	Grey	E-RGW25	1SNA519005R0000		25	0.146

Main technical data

Material specifications	Insulating material	Polyamide	
	Flammability	V0	
	NF F 16 101	I2F2	
Ambient temperature min/max	Service IEC 60068-2-1	-40 ... +100 °C	-40 ... +212 °C
	Storage	-40 ... +100 °C	-40 ... +212 °C
	Installing	-25 ... +70 °C	-13 ... +167 °C

All the main technical data provided are "manufacturer" values.

CE RoHS

1SNC168035S0201

Technical data valid for copper conductors only.

1SNC160469V0014

PC-RG2.5

Lateral jumper bars

Description

- Lateral jumper bar for ring lug terminal block,
- Allow the connection of consecutive blocks,
- Compatible with RGW terminal block.

Ordering details

Description				Color	Type	Part Number		Pkg qty	Weight (1 pce) g
Compatible with M3 stud. For blocks RGW2.5...									
9 mm	0.354 in	2 poles	24 A (IEC)	Orange	PC-RG2.5-2	1SNA519103R0200		25	3.02
		3 poles	24 A (IEC)		PC-RG2.5-3	1SNA519103R0300		20	4.69
		4 poles	24 A (IEC)		PC-RG2.5-4	1SNA519103R0400		15	6.36
		10 poles	24 A (IEC)		PC-RG2.5-10	1SNA519103R1000		5	16.39
Compatible with M4 stud. For blocks RGW6...									
11 mm	0.433 in	2 poles	41 A (IEC)	Orange	PC-RG6-2	1SNA519104R0200		25	3.44
		3 poles	41 A (IEC)		PC-RG6-3	1SNA519104R0300		20	5.40
		4 poles	41 A (IEC)		PC-RG6-4	1SNA519104R0400		15	7.33
		7 poles	41 A (IEC)		PC-RG6-7	1SNA519104R0700		5	13.24
		10 poles	41 A (IEC)		PC-RG6-10	1SNA519104R1000		5	19.05
Compatible with M5 or M6 stud. For blocks RGW25...									
18 mm	0.709 in	2 poles	101 A (IEC)	Orange	PC-RG25-2	1SNA519106R0200		25	8.81

Main technical data

Material specifications	Insulating material	Polyamide	
	Flammability	V0	
	NF F 16 101	I2F2	
Ambient temperature min/max	Service IEC 60068-2-1	-40 ... +100 °C	-40 ... +212 °C
	Storage	-40 ... +100 °C	-40 ... +212 °C
	Installing	-25 ... +70 °C	-13 ... +167 °C

All the main technical data provided are "manufacturer" values.

CE RoHS

1SNC168036S0201

Technical data valid for copper conductors only.

CS-RGW-L

CS-RGW circuit separators

Description

- Circuit separator for RGW terminal blocks,
- Ease the visual identification of the several circuits within the terminal block assemblies,
- Compatible with all RGW terminal blocks.

Ordering details

Description	Color	Type	Part Number		Pkg qty	Weight (1 pce) g
2 mm 0.078 in spacing	Grey	CS-RGW-L	1SNA519201R0000		25	13.72

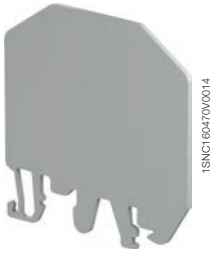

CS-RGW-S

CS-RGW circuit separators

Description

- Circuit separator for RGW terminal blocks,
- Ease the visual identification of the several circuits within the terminal block assemblies,
- Compatible with RGW feed-through and ground terminal blocks up to 11 mm 0.433 in spacing.

Ordering details

Description	Color	Type	Part Number		Pkg qty	Weight (1 pce) g
1.5 mm 0.059 in spacing	Grey	CS-RGW-S	1SNA519200R0000		25	4.59

Main technical data

Material specifications	Insulating material	Polyamide	
	Flammability	V0	
	NF F 16 101	I2F2	
Ambient temperature min/max	Service IEC 60068-2-1	-40 ... +100 °C	-40 ... +212 °C
	Storage	-40 ... +100 °C	-40 ... +212 °C
	Installing	-25 ... +70 °C	-13 ... +167 °C

All the main technical data provided are "manufacturer" values.

CE RoHS

1SNC168037S0201

Technical data valid for copper conductors only.

Markers and marking systems

Marking systems			Support plates			Markers		
	Type	Part Number		Type	Part Number		Type	Part Number
	MG3 KIT	1SNB419001R0000		MG2-QTB 991011	1SNB991011R0000	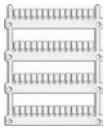	MG-CPM-01 41090 MG-CPM-01-41096	1SNB041090R0510 1SNB041096R0810
	AMS 600 KIT AMS 250 BASIC KIT	1SNA360000R2400 1SNA360000R2500		SPRC 26	1SNA360036R0300	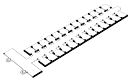	M-W610PC M-W810PC M-W1010PC	1SNA235511R0600 1SNA235510R0800 1SNA235512R1000

1SNC168039S0201

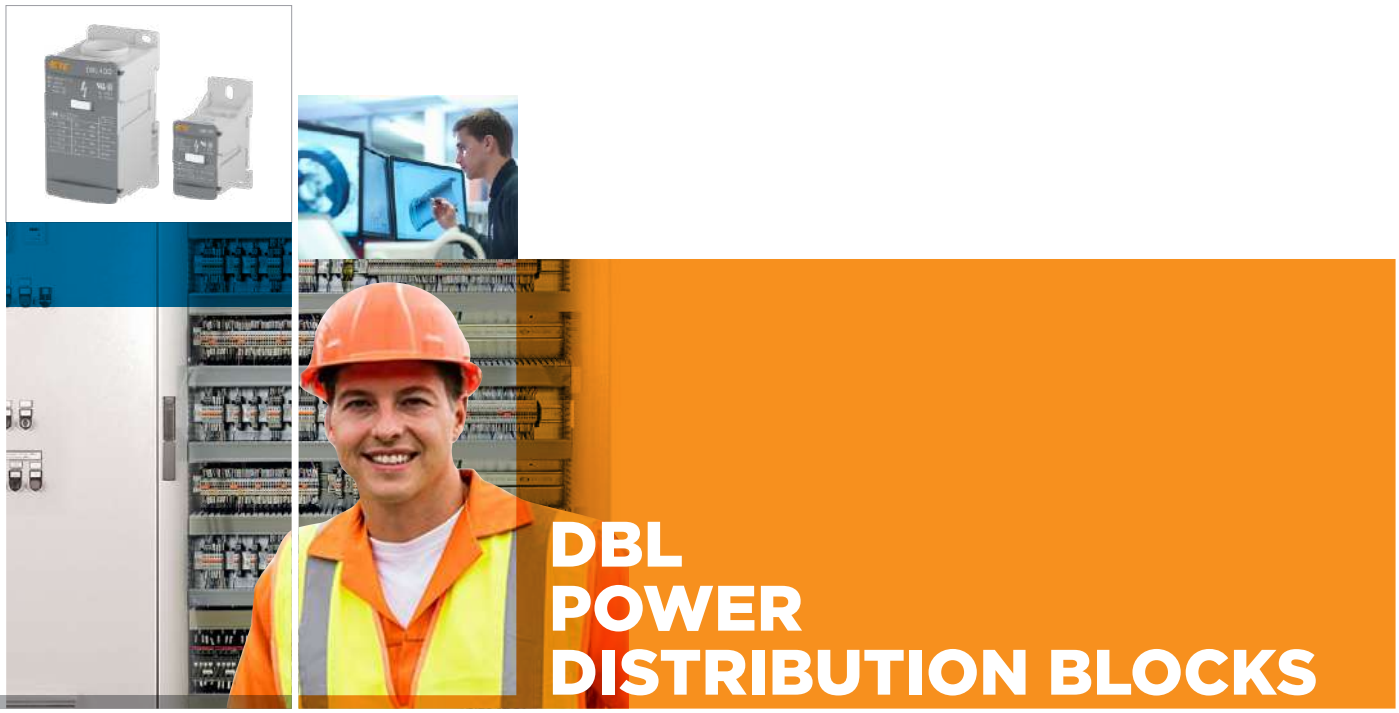

DBL POWER DISTRIBUTION BLOCKS

ENTRELEC Terminal Blocks

The clever distribution concept

The exclusive compact and modular design of our power distribution blocks allows easy installation combined with a great flexibility of use.

Easy to install

3 configurations in 1 product:

Single pole splitter: split of power main input into several outputs
Multiple poles splitter: interlocking function and ready to use marking kit (L1, L2, L3, N, PE, +, -) delivered with each block
Grouping: of several inputs into 1 output (solar application).

Flexible cover facilitates identification & wiring:

- Reversible, two directions opening, snap-on
- All wiring data's and specifications visible on top.

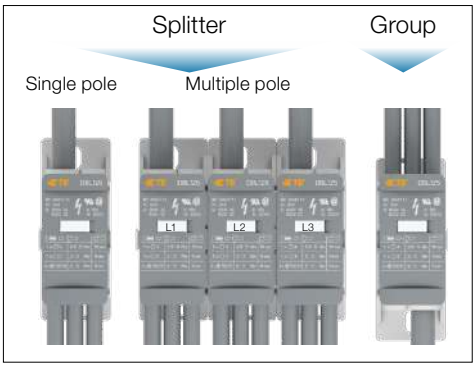

Space saving

Panel space saving:

Save up to 50 % rail space compare to conventional distribution bars thanks to our modular compact design.

1 500 V DC:

Voltage rating adapted to most recent solar inverters requirements.

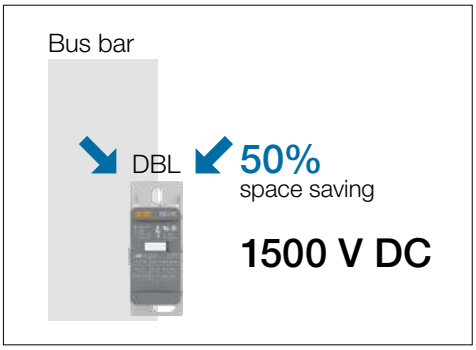

Increased productivity

Reduced wiring, inventories, hardware and assembly costs:

- Reduce assembly time by 80 % compared to conventional systems
- Our modular and touch proof concept eliminates the needs for bus bars, isolators, fasteners, protection screens…
- Accept **aluminum & copper** conductors
- **1** product in stock for **3 possible** configurations.

1SNC166009S0201 - Rev. D

Distributing power in industrial and commercial panels HVAC, machinery, power distribution unit (PDU), commercial panel

3 Phases
DBL80, DBL125, DBL160, DBL175, DBL250, DBL400, DBL125-3, DBL175-C-3

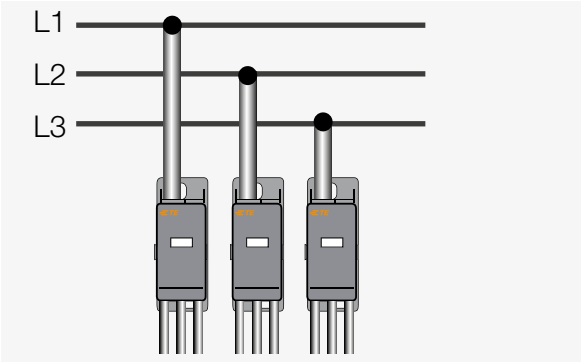

3 Phases for flat conductor
DBL250-F, DBL500-F

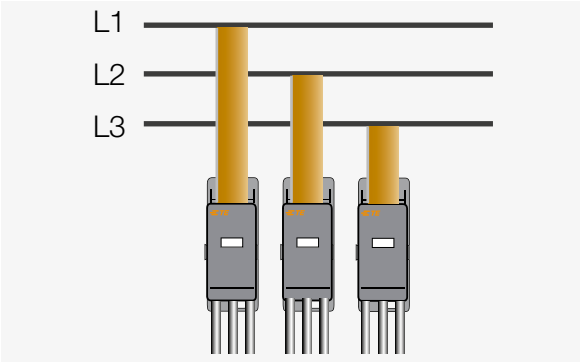

3 Phases with jumpering wire
DBL80, DBL125, DBL160, DBL175, DBL400-PV, DBL125-3, DBL175-C-3 and DBL500-22

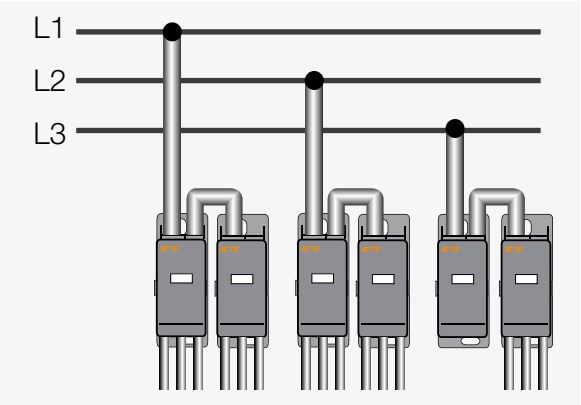

2 in/2 out configuration
DBL500-22

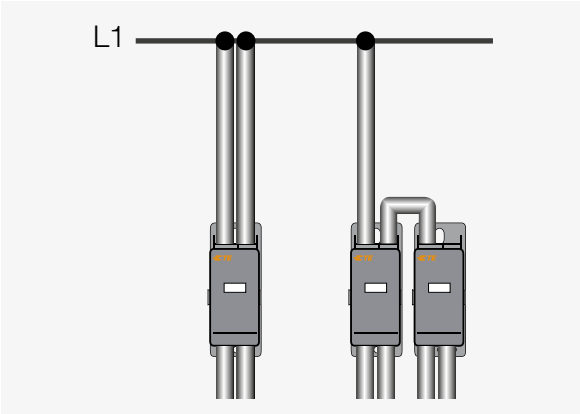

Combining PV strings in one single output
PV combiner box, central inverter in a solar power plant

Up to 12 PV strings
DBL80…DBL500-F
DBL400-PV specifically designed for solar application with 12 inputs of 16 mm².

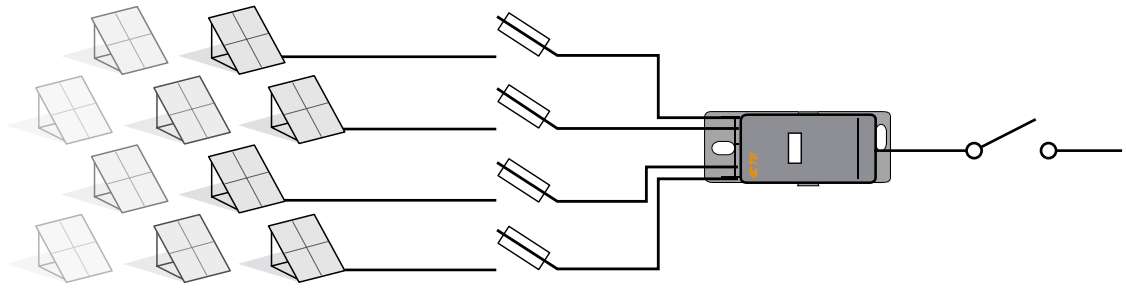

1SNC166027S0201 - Rev. C

Range overview 1000 V AC / 1500 V DC (IEC) - 1000 V (UL), from 80 to 550 A

Single pole

DBL80
7 connections

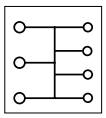

DBL125
8 connections

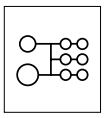

DBL160
8 connections

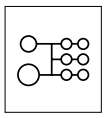

DBL175
12 connections

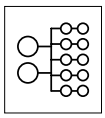

DBL250 and DBL400
12 connections

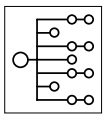

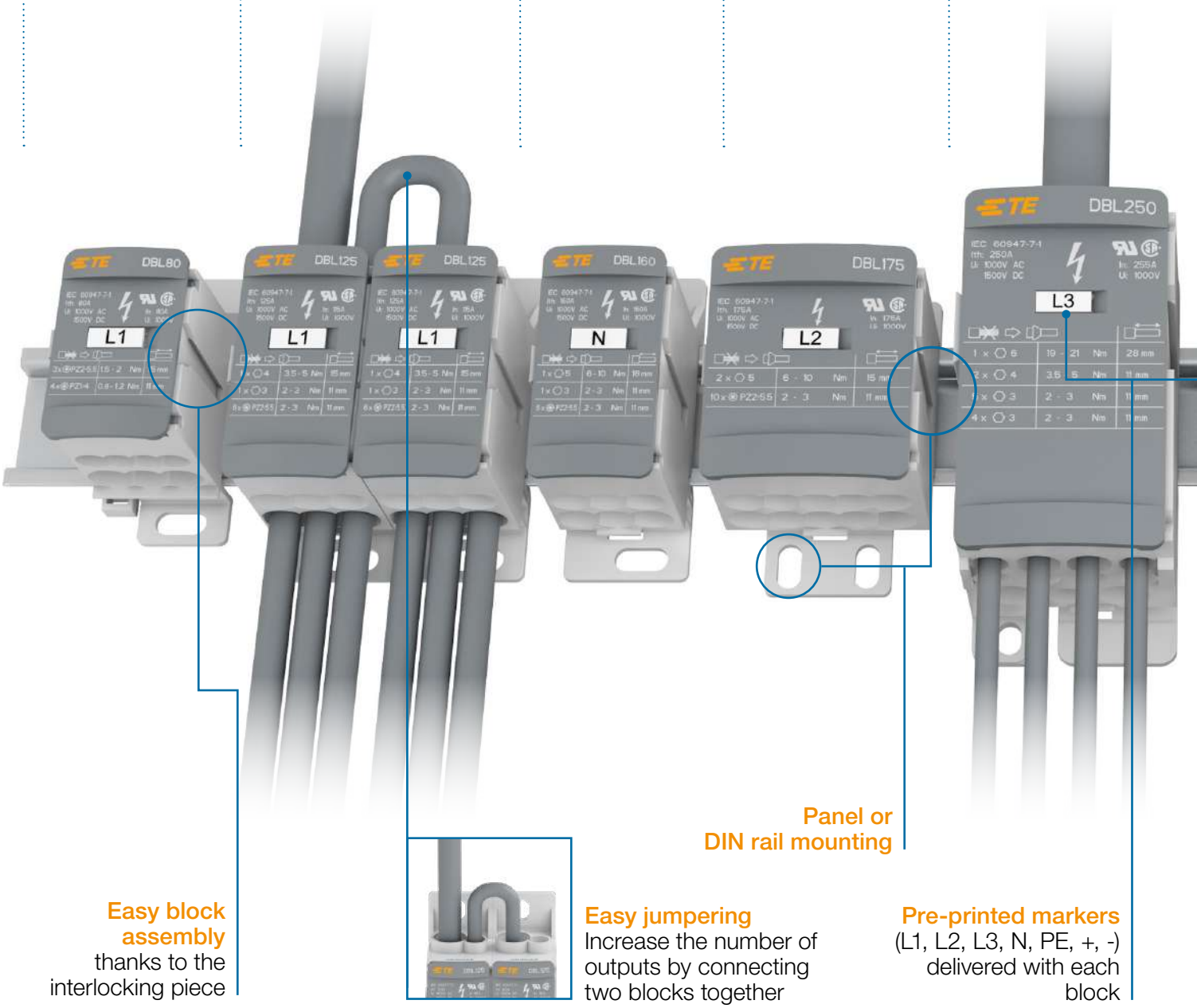

Easy block assembly
thanks to the interlocking piece

Easy jumpering
Increase the number of outputs by connecting two blocks together

Panel or DIN rail mounting

Pre-printed markers
(L1, L2, L3, N, PE, +, -) delivered with each block

Solar

DBL400-PV
14 connections

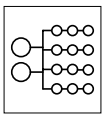

Three poles

DBL125-3 and
DBL175-C-3
8x3 connections

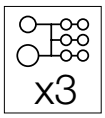

Flat conductor

DBL250-F and
DBL500-F
7 and 12 connections

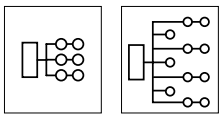

2 in/2 out

DBL500-22
4 connections

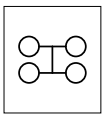

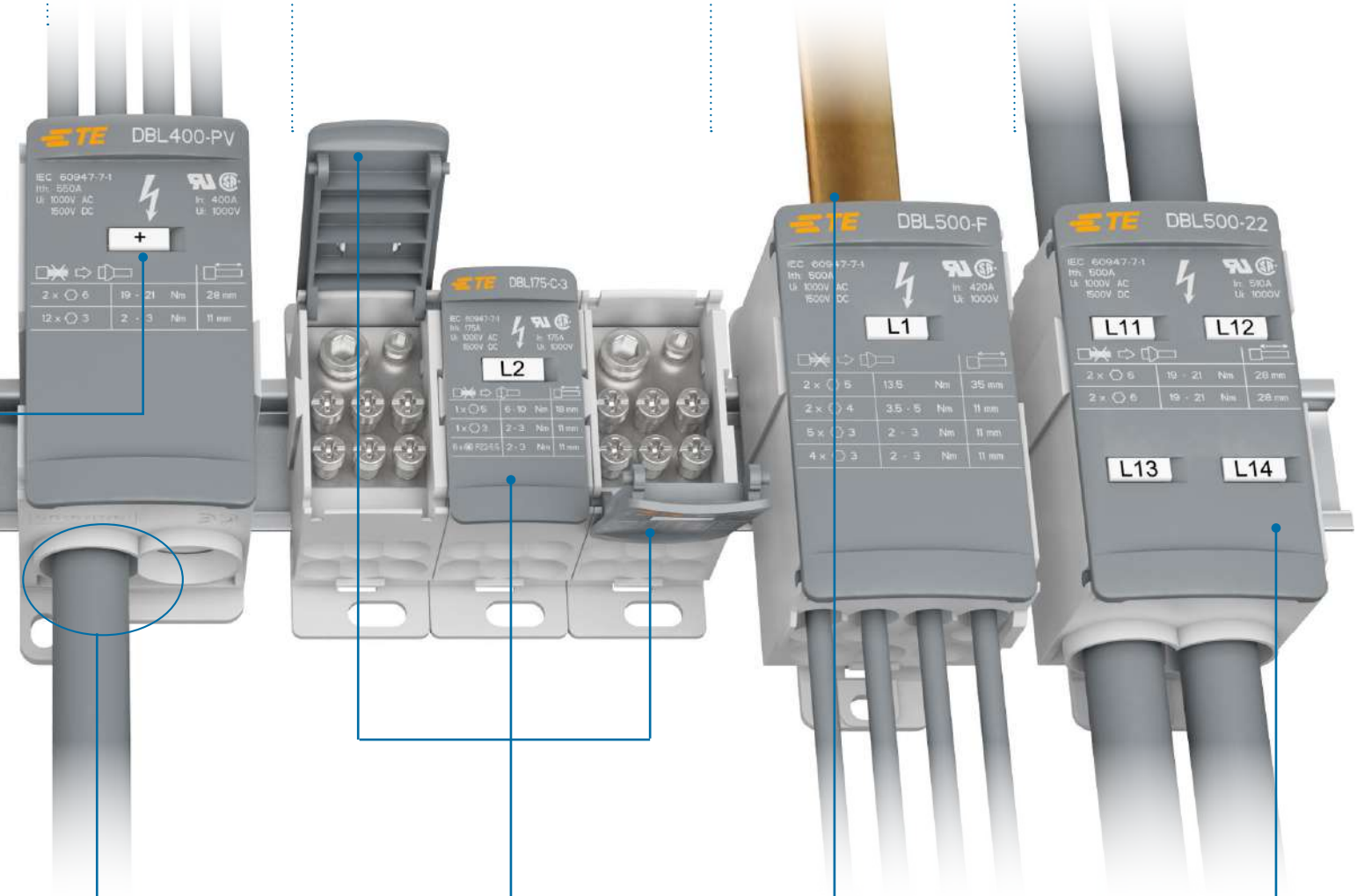

Combining of 12 photovoltaic strings
to collect solar energy up to 1500 V DC (IEC), 1000 V DC (UL)

Flexible cover for easy wiring:
- Two directions opening
- Removable & snap-on

Flat conductor feed-in

Main technical data printed on the cover and visible from top

1SNC166011S0201 - Rev. B

DBL power distribution blocks
Panorama

Input/ Output
Round conductors

Single pole

	Max current IEC	Max current UL	Cross section	Cross section	7	8	8	12	12	12
Number of connections					7	8	8	12	12	12
Cu	80 A	80 A	16 mm²	4 AWG	DBL80					
Al	63 A	-	16 mm²	-						
Cu	125 A	115 A	35 mm²	2 AWG		DBL125				
Al	100 A	-	35 mm²	-						
Cu	160 A	160 A	70 mm²	2/0 AWG			DBL160			
Al	135 A	-	70 mm²	-						
Cu	175 A	175 A	70 mm²	2/0 AWG				DBL175		
Al	135 A	-	70 mm²	-						
Cu	250 A	255 A	120 mm²	250 Kcmil					DBL250	
Al	200 A	-	120 mm²	-						
Cu	400 A	335 A	185 mm²	400 Kcmil						DBL400
Al	300 A	-	185 mm²	-						
Cu	500 A	510 A	95 mm²	250 Kcmil						
Cu	550 A	400 A	95 mm²	250 Kcmil						

Input:
Flat conductors
Output:
Round conductors

Flat conductors

	Max current IEC	Max current UL	Max cross section	7	12
Number of connections				7	12
Cu	250 A	250 A	15.5 x 7.5 mm	DBL250-F	
Cu	500 A	420 A	24 x 10 x 1 mm		DBL500-F

Three poles		2 in/2 out	Solar
8x3 X3	**8x3** X3	**4**	**14**
DBL125-3			
	DBL175-C-3		
		DBL500-22	
			DBL400-PV

1SNC166026S0201 - Rev. B

DBL80 power distribution blocks

Single pole - 28.4 mm 1.11 in spacing

1SNC166026V0014

DBL80

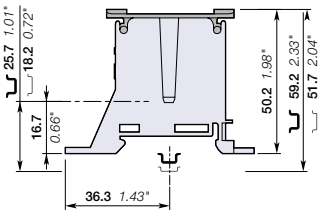

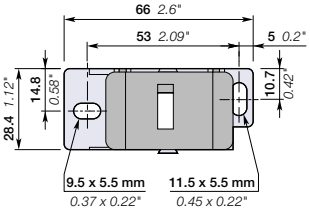

28.4 mm 1.11 in spacing

Mounting instructions

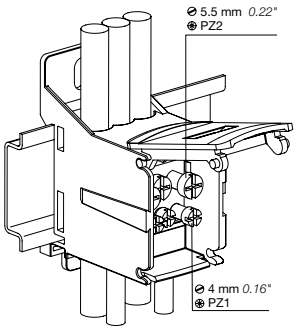

Description

- 3 configurations: distribute unipolar and multipolar power lines, or combine several inputs
- Mount it on Din rail or plate and save up to 50% rail space compared to conventional copper bars
- Reduce the assembly time by 80% by avoiding to use fastening and isolating components
- Increase the number of outputs by using the optional input and connecting two DBL together
- Easy identification with the reversible cover and delivered pre-printed markers L1, L2, L3, N, PE, +, –.

Ordering details

Description		Color	Type	Part Number		Pkg qty	Weight 1 pce g
Feed-through	Single pole distribution, 7 connections	Grey	DBL80	1SNL308010R0000		1	70

Main technical data

Connecting capacity		IEC	UL
Max current / Cross section	Copper	80 A / 16 mm²	80 A / 4 AWG
	Aluminium	63 A / 16 mm²	
Rated voltage		1000 V AC / 1500 V DC	1000 V
Rated impulse voltage		8 kV	
Short-time withstand current (Icw 1s)		1920 A	
Short Circuit Current Rating (SCCR)			100 kA
Rated peak withstand current (Ipk)		27 kA	
Protection		IP20	NEMA 1

The connecting capacity data for one Rigid: Solid/Stranded - Flexible conductor (when applicable) is a mandatory information required by IEC, UL and CSA standards (Copper conductors). All other data are provided as supplementary information only. For more details, please consult our CB, UL or CSA certificates and technical datasheet available on http://www.TE.com

CE CB RoHS USR CSA EAC BV

Mounting & wiring instructions

Rail: TH 35-7.5, TH 35-15

Connection Number		Size	Wire type		Wire stripping length	Tool	Torque
Input	3 x	Ø 6.6 mm Ø 0.26 in	2.5 ... 16 mm² 14 ... 6 AWG	2.5 ... 16 mm² 14 ... 4 AWG	15 mm 0.59 in	5.5 mm 0.22 in	1.5 ... 2 Nm 13.5 ... 18 lb.in
Output	4 x	Ø 4.5 mm Ø 0.18 in	2.5 ... 6 mm² 14 ... 10 AWG	2.5 ... 6 mm² 14 ... 10 AWG	11 mm 0.43 in	4 mm 0.16 in	0.8 ... 1.2 Nm 7.2 ... 10.8 lb.in

Not allowed			
Flexible without ferrule (IEC V-K & UL: class 5/6)	Flexible with insulated ferrule (IEC V-K & UL: class 5/6)	Rigid Solid (IEC V-U class 1, UL solid)	Rigid Stranded (IEC V-R class 2, UL class B/C)

Allen key Posidriv - flat screwdriver

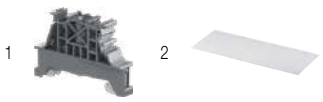

1 2

Accessories

	Description			Color	Type	Part Number		Pkg qty	Weight 1 pce g
1	End stops	10 mm	0.394 in	Dark grey	BAM4	1SNK900001R0000		50	14.00
		5.2 mm	0.205 in		BAZ1	1SNK900002R0000		50	5.30
		10 mm	0.394 in		BAZH1	1SNK900102R0000		20	24.00
2	Terminal block markers	Blank card		Green	MC512PA-GN	1SNK149997R0000		20	10.00
				Blue	MC512PA-BL	1SNK149998R0000		20	10.00
				White	MC512PA	1SNK149999R0000		20	10.00
		Pre-printed marker card (L1-L2-L3-N-PE)			MC512PA	1SNK149002R0000		1	10.00

Complete list of accessories is indicated in the terminal block datasheet including end stops. Some accessories such as jumper bars may modify the terminal block's ratings: Complete information available in the accessories section of the catalog.

1SNC166012S0201

DBL125 power distribution blocks
Single pole - 28.2 mm 1.11 in spacing

DBL125

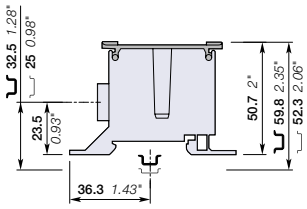

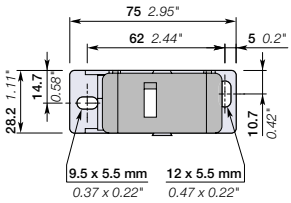

28.2 mm 1.11 in spacing

Mounting instructions

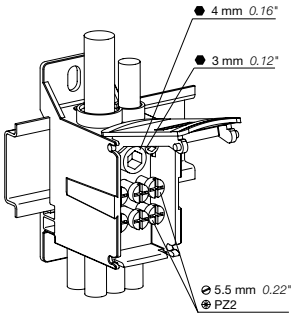

1SNC166027V0014

Description

- 3 configurations: distribute unipolar and multipolar power lines, or combine several inputs
- Mount it on Din rail or plate and save up to 50% rail space compared to conventional copper bars
- Reduce the assembly time by 80% by avoiding to use fastening and isolating components
- Increase the number of outputs by using the optional input and connecting two DBL together
- Easy identification with the reversible cover and delivered pre-printed markers L1, L2, L3, N, PE, +, –.

Ordering details

Description		Color	Type	Part Number		Pkg qty	Weight 1 pce g
Feed-through	Single pole distribution, 8 connections	Grey	DBL125	1SNL312510R0000		1	122

Main technical data

Connecting capacity		IEC	UL
Max current / Cross section	Copper	125 A / 35 mm²	115 A / 2 AWG
	Aluminium	100 A / 35 mm²	
Rated voltage		1000 V AC / 1500 V DC	1000 V
Rated impulse voltage		8 kV	
Short-time withstand current (Icw 1s)		4200 A	
Short Circuit Current Rating (SCCR)			100 kA
Rated peak withstand current (Ipk)		30 kA	
Protection		IP20	NEMA 1

The connecting capacity data for one Rigid: Solid/Stranded - Flexible conductor (when applicable) is a mandatory information required by IEC, UL and CSA standards (Copper conductors). All other data are provided as supplementary information only. For more details, please consult our CB, UL or CSA certificates and technical datasheet available on http://www.TE.com

CE CB RoHS USR CSA EAC BV

Mounting & wiring instructions

Rail: TH 35-7.5, TH 35-15

Connection Number		Size	Wire type		Wire stripping length	Tool	Torque
Input	1 x	Ø 9.8 mm Ø 0.39 in	10 ... 35 mm² 8 ... 2 AWG	10 ... 35 mm² 8 ... 2 AWG	15 mm 0.59 in	4 mm 0.16 in	3.5 ... 5 Nm 31 ... 44 lb.in
Output	1 x	Ø 6.8 mm Ø 0.27 in	2.5 ... 16 mm² 14 ... 6 AWG	6 ... 16 mm² 10 ... 6 AWG	11 mm 0.43 in	3 mm 0.12 in	2 ... 3 Nm 18 ... 26.5 lb.in
	6 x	Ø 6.4 mm Ø 0.25 in	2.5 ... 16 mm² 14 ... 6 AWG	2.5 ... 16 mm² 14 ... 6 AWG	11 mm 0.43 in	5.5 mm 0.22 in	2 ... 3 Nm 18 ... 26.5 lb.in

When using maximum cable size with insulated ferrules, use a maximum of 2 non-adjacent holes in each row.

Not allowed			
Flexible without ferrule (IEC V-K & UL: class 5/6)	Flexible with insulated ferrule (IEC V-K & UL: class 5/6)	Rigid Solid (IEC V-U class 1, UL solid)	Rigid stranded (IEC V-R class 2, UL class B/C)

Allen key Posidriv - flat screwdriver

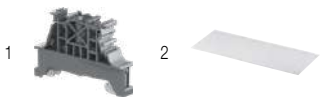

1 2

Accessories

	Description			Color	Type	Part Number		Pkg qty	Weight 1 pce g
1	End stops	10 mm	0.394 in	Dark grey	BAM4	1SNK900001R0000		50	14.00
		5.2 mm	0.205 in		BAZ1	1SNK900002R0000		50	5.30
		10 mm	0.394 in		BAZH1	1SNK900102R0000		20	24.00
2	Terminal block markers	Blank card		Green	MC512PA-GN	1SNK149997R0000		20	10.00
				Blue	MC512PA-BL	1SNK149998R0000		20	10.00
				White	MC512PA	1SNK149999R0000		20	10.00
		Pre-printed marker card (L1-L2-L3-N-PE)			MC512PA	1SNK149002R0000		1	10.00

Complete list of accessories is indicated in the terminal block datasheet including end stops. Some accessories such as jumper bars may modify the terminal block's ratings: Complete information available in the accessories section of the catalog.

1SNC166013S0201

DBL125-3 power distribution blocks

3x1 pole - 84.6 mm 3.33 in spacing

X3

DBL125-3

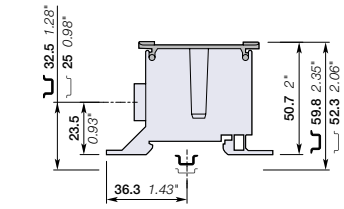

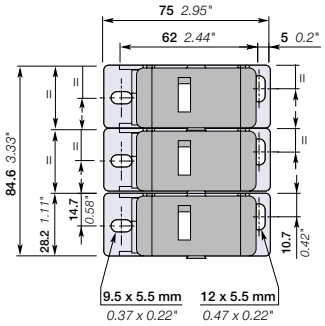

84.6 mm 3.33 in spacing

Mounting instructions

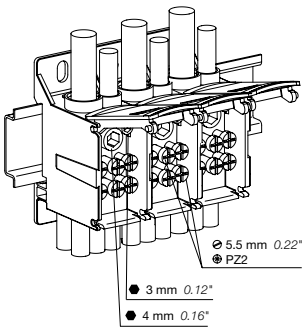

1 2

Description

- The usage of three poles distribution block is recommended for L1, L2, L3 applications
- Each pole can be separated from the assembly to align the poles with upstream equipment configuration
- Mount it on Din rail or plate and save up to 50% rail space compared to conventional copper bars
- Reduce the assembly time by 80% by avoiding to use fastening and isolating components
- Easy identification with the reversible cover and delivered pre-printed markers L1, L2, L3, N, PE, +, –.

Ordering details

Description		Color	Type	Part Number		Pkg qty	Weight 1 pce g
Feed-through	Three poles distribution block 3x8 connections	Grey	DBL125-3	1SNL312530R0000		1	367

Main technical data

Connecting capacity		IEC	UL
Max current / Cross section	Copper	125 A / 35 mm²	115 A / 2 AWG
	Aluminium	100 A / 35 mm²	
Rated voltage		1000 V AC / 1500 V DC	1000 V
Rated impulse voltage		8 kV	
Short-time withstand current (Icw 1s)		4200 A	
Short Circuit Current Rating (SCCR)			
Rated peak withstand current (Ipk)		30 kA	
Protection		IP20	NEMA 1

The connecting capacity data for one Rigid: Solid/Stranded - Flexible conductor (when applicable) is a mandatory information required by IEC, UL and CSA standards (Copper conductors). All other data are provided as supplementary information only. For more details, please consult our CB, UL or CSA certificates and technical datasheet available on http://www.TE.com

CE CB RoHS USR CSA EAC

Mounting & wiring instructions

Rail: TH 35-7.5, TH 35-15

Connection Number by pole		Size	Wire type		Wire stripping length	Tool	Torque
Input	1 x	Ø 9.8 mm Ø 0.39 in	10 ... 35 mm² 8 ... 2 AWG	10 ... 35 mm² 8 ... 2 AWG	15 mm 0.59 in	4 mm 0.16 in	3.5 ... 5 Nm 31 ... 44 lb.in
Output	1 x	Ø 6.8 mm Ø 0.27 in	2.5 ... 16 mm² 14 ... 6 AWG	6 ... 16 mm² 10 ... 6 AWG	11 mm 0.43 in	3 mm 0.12 in	2 ... 3 Nm 18 ... 26.5 lb.in
	6 x	Ø 6.4 mm Ø 0.25 in	2.5 ... 16 mm² 14 ... 6 AWG	2.5 ... 16 mm² 14 ... 6 AWG	11 mm 0.43 in	5.5 mm 0.22 in	2 ... 3 Nm 18 ... 26.5 lb.in

When using maximum cable size with insulated ferrules, use a maximum of 2 non-adjacent holes in each row.

Not allowed Flexible without ferrule (IEC V-K & UL: class 5/6)	Flexible with insulated ferrule (IEC V-K & UL: class 5/6)	Rigid Solid (IEC V-U class 1, UL solid)	Rigid stranded (IEC V-R class 2, UL class B/C)

Allen key Posidriv - flat screwdriver

Accessories

	Description			Color	Type	Part Number		Pkg qty	Weight 1 pce g
1	End stops	10 mm	0.394 in	Dark grey	BAM4	1SNK900001R0000		50	14.00
		5.2 mm	0.205 in		BAZ1	1SNK900002R0000		50	5.30
		10 mm	0.394 in		BAZH1	1SNK900102R0000		20	24.00
2	Terminal block markers	Blank card		Green	MC512PA-GN	1SNK149997R0000		20	10.00
				Blue	MC512PA-BL	1SNK149998R0000		20	10.00
				White	MC512PA	1SNK149999R0000		20	10.00
		Pre-printed marker card (L1-L2-L3-N-PE)			MC512PA	1SNK149002R0000		1	10.00

Complete list of accessories is indicated in the terminal block datasheet including end stops. Some accessories such as jumper bars may modify the terminal block's ratings: Complete information available in the accessories section of the catalog.

1SNC166020S0201

DBL160 power distribution blocks
Single pole - 28.2 mm 1.11 in spacing

DBL160

1SNC166028V0014

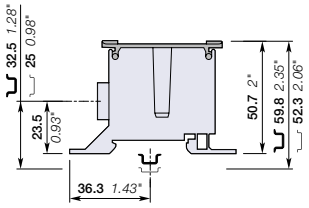

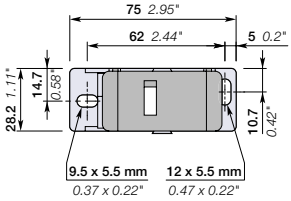

28.2 mm 1.11 in spacing

Mounting instructions

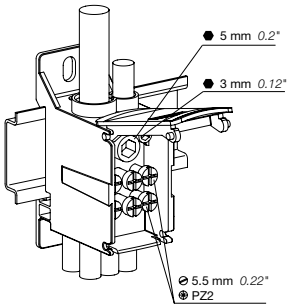

Description

- 3 configurations: distribute unipolar and multipolar power lines, or combine several inputs
- Mount it on Din rail or plate and save up to 50% rail space compared to conventional copper bars
- Reduce the assembly time by 80% by avoiding to use fastening and isolating components
- Increase the number of outputs by using the optional input and connecting two DBL together
- Easy identification with the reversible cover and delivered pre-printed markers L1, L2, L3, N, PE, +, –.

Ordering details

Description		Color	Type	Part Number		Pkg qty	Weight 1 pce g
Feed-through	Single pole distribution, 8 connections	Grey	DBL160	1SNL316010R0000		1	120

Main technical data

Connecting capacity		IEC	UL
Max current / Cross section	Copper	160 A / 70 mm²	160 A / 2/0 AWG
	Aluminium	135 A / 70 mm²	
Rated voltage		1000 V AC / 1500 V DC	1000 V
Rated impulse voltage		8 kV	
Short-time withstand current (Icw 1s)		6000 A	
Short Circuit Current Rating (SCCR)			100 kA
Rated peak withstand current (Ipk)		30 kA	
Protection		IP10	NEMA 1

The connecting capacity data for one Rigid: Solid/Stranded - Flexible conductor (when applicable) is a mandatory information required by IEC, UL and CSA standards (Copper conductors). All other data are provided as supplementary information only. For more details, please consult our CB, UL or CSA certificates and technical datasheet available on http://www.TE.com

CE CB RoHS USR CSA EAC BV

Mounting & wiring instructions

Rail: TH 35-7.5, TH 35-15

Connection Number		Size	Wire type		Wire stripping length	Tool	Torque
Input	1 x	Ø 11.8 mm Ø 0.46 in	16 ... 50 mm² 6 ... 1/0 AWG	16 ... 70 mm² 6 ... 2/0 AWG	18 mm 0.708 in	5 mm 0.20 in	6... 10 Nm 53 ... 88 lb.in
Output	1 x	Ø 6.8 mm Ø 0.27 in	2.5 ... 16 mm² 14 ... 6 AWG	6 ... 16 mm² 10 ... 6 AWG	11 mm 0.43 in	3 mm 0.12 in	2 ... 3 Nm 18 ... 26.5 lb.in
	6 x	Ø 6.4 mm Ø 0.25 in	2.5 ... 16 mm² 14 ... 6 AWG	2.5 ... 16 mm² 14 ... 6 AWG	11 mm 0.43 in	5.5 mm 0.22 in	2 ... 3 Nm 18 ... 26.5 lb.in

When using maximum cable size with insulated ferrules, use a maximum of 2 non-adjacent holes in each row.

Not allowed			
Flexible without ferrule (IEC V-K & UL: class 5/6)	Flexible with insulated ferrule (IEC V-K & UL: class 5/6)	Rigid Solid (IEC V-U class 1, UL solid)	Rigid stranded (IEC V-R class 2, UL class B/C)

Allen key Posidriv - flat screwdriver

1 2

Accessories

	Description			Color	Type	Part Number		Pkg qty	Weight 1 pce g
1	End stops	10 mm	0.394 in	Dark grey	BAM4	1SNK900001R0000		50	14.00
		5.2 mm	0.205 in		BAZ1	1SNK900002R0000		50	5.30
		10 mm	0.394 in		BAZH1	1SNK900102R0000		20	24.00
2	Terminal block markers	Blank card		Green	MC512PA-GN	1SNK149997R0000		20	10.00
				Blue	MC512PA-BL	1SNK149998R0000		20	10.00
				White	MC512PA	1SNK149999R0000		20	10.00
		Pre-printed marker card (L1-L2-L3-N-PE)			MC512PA	1SNK149002R0000		1	10.00

Complete list of accessories is indicated in the terminal block datasheet including end stops. Some accessories such as jumper bars may modify the terminal block's ratings: Complete information available in the accessories section of the catalog.

1SNC166014S0201

DBL175 power distribution blocks

Single pole - 46.2 mm 1.82 in spacing

1SNC166029V0014

DBL175

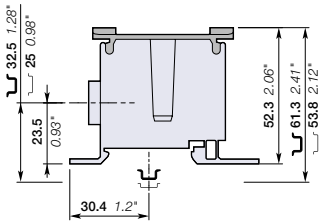

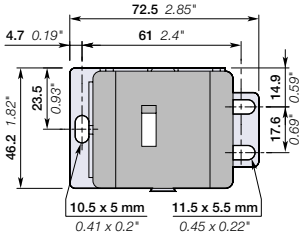

46.2 mm 1.81 in spacing

Mounting instructions

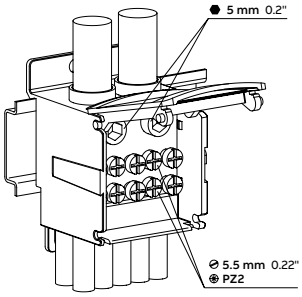

Description

- Reduce the assembly time by 80% by avoiding to use fastening and isolating components
- Mount it on Din rail or plate and save up to 50% rail space compared to conventional copper bars
- Increase the number of outputs by using the optional input and connecting two DBL together, or increase the current rating with two wires, 300 A with 50 mm² wires and 350 A with 2/0 AWG wires
- Easy identification with the reversible cover and delivered pre-printed markers L1, L2, L3, N, PE, +, –.

Ordering details

Description		Color	Type	Part Number		Pkg qty	Weight 1 pce g
Feed-through	Single pole distribution, 12 connections	Grey	DBL175	1SNL317510R0000		1	200

Main technical data

Connecting capacity		IEC	UL
Max current / Cross section	Copper	175 A / 70 mm²	175 A / 2/0 AWG
	Aluminium	135 A / 70 mm²	
Rated voltage		1000 V AC / 1500 V DC	1000 V
Rated impulse voltage		8 kV	
Short-time withstand current (Icw 1s)		6000 A	
Short Circuit Current Rating (SCCR)			100 kA
Rated peak withstand current (Ipk)		30 kA	
Protection		IP10	NEMA 1

The connecting capacity data for one Rigid: Solid/Stranded - Flexible conductor (when applicable) is a mandatory information required by IEC, UL and CSA standards (Copper conductors). All other data are provided as supplementary information only. For more details, please consult our CB, UL or CSA certificates and technical datasheet available on http://www.TE.com

CE CB RoHS USR CSA EAC BV

Mounting & wiring instructions

Rail: TH 35-7.5, TH 35-15

Connection Number		Size	Wire type		Wire stripping length	Tool	Torque
Input	2 x	Ø 11.8 mm Ø 0.46 in	10 ... 50 mm² 8 ... 1/0 AWG	10 ... 70 mm² 6 ... 2/0 AWG	15 mm 0.708 in	5 mm 0.20 in	6... 10 Nm 53 ... 88 lb.in
Output	10 x	Ø 6.4 mm Ø 0.25 in	2.5 ... 16 mm² 14 ... 6 AWG	2.5 ... 16 mm² 14 ... 6 AWG	11 mm 0.43 in	5.5 mm 0.22 in	2 ... 3 Nm 18 ... 26.5 lb.in

When using maximum cable size with insulated ferrules, use a maximum of 3 non-adjacent holes in each row.

Not allowed Flexible without ferrule (IEC V-K & UL: class 5/6)	Flexible with insulated ferrule (IEC V-K & UL: class 5/6)	Rigid Solid (IEC V-U class 1, UL solid)	Rigid stranded (IEC V-R class 2, UL class B/C)

Allen key Posidriv - flat screwdriver

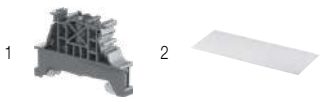

1 2

Accessories

	Description			Color	Type	Part Number		Pkg qty	Weight 1 pce g
1	End stops	10 mm	0.394 in	Dark grey	BAM4	1SNK900001R0000		50	14.00
		5.2 mm	0.205 in		BAZ1	1SNK900002R0000		50	5.30
		10 mm	0.394 in		BAZH1	1SNK900102R0000		20	24.00
2	Terminal block markers	Blank card		Green	MC512PA-GN	1SNK149997R0000		20	10.00
				Blue	MC512PA-BL	1SNK149998R0000		20	10.00
				White	MC512PA	1SNK149999R0000		20	10.00
		Pre-printed marker card (L1-L2-L3-N-PE)			MC512PA	1SNK149002R0000		1	10.00

Complete list of accessories is indicated in the terminal block datasheet including end stops. Some accessories such as jumper bars may modify the terminal block's ratings: Complete information available in the accessories section of the catalog.

1SNC166015S0201

DBL175-C-3 power distribution blocks

3x1 pole - 84.6 mm 3.33 in spacing

X3

DBL175-C-3

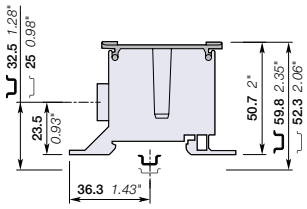

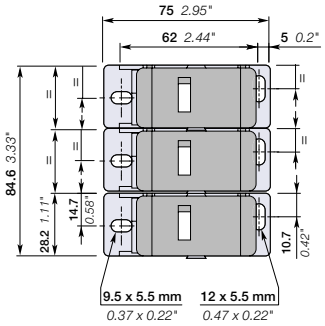

84.6 mm 3.33 in spacing

Mounting instructions

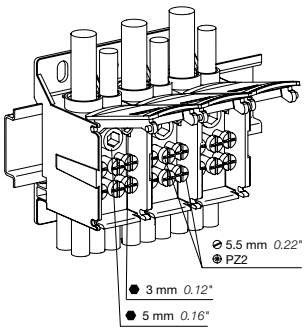

1 2

Description

- The usage of three poles distribution block is recommended for L1, L2, L3 applications
- Each pole can be separated from the assembly to align the poles with upstream equipment configuration
- Mount it on Din rail or plate and save up to 50% rail space compared to conventional copper bars
- Reduce the assembly time by 80% by avoiding to use fastening and isolating components
- Easy identification with the reversible cover and delivered pre-printed markers L1, L2, L3, N, PE, +, –.

Ordering details

Description		Color	Type	Part Number		Pkg qty	Weight 1 pce g
Feed-through	Three poles distribution block 3x8 connections	Grey	DBL175-C-3	1SNL317531R0000		1	360

Main technical data

Connecting capacity		IEC	UL
Max current / Cross section	Copper	175 A / 70 mm²	175 A / 2/0 AWG
	Aluminium	135 A / 70 mm²	
Rated voltage		1000 V AC / 1500 V DC	1000 V
Rated impulse voltage		8 kV	
Short-time withstand current (Icw 1s)		6000 A	
Short Circuit Current Rating (SCCR)			
Rated peak withstand current (Ipk)		30 kA	
Protection		IP10	NEMA 1

The connecting capacity data for one Rigid: Solid/Stranded - Flexible conductor (when applicable) is a mandatory information required by IEC, UL and CSA standards (Copper conductors). All other data are provided as supplementary information only. For more details, please consult our CB, UL or CSA certificates and technical datasheet available on http://www.TE.com

CE CB RoHS USR CSA EAC

Mounting & wiring instructions

Rail: TH 35-7.5, TH 35-15

Connection Number by pole		Size	Wire type		Wire stripping length	Tool	Torque
Input	1 x	Ø 11.8 mm Ø 0.46 in	16 ... 50 mm² 8 ... 1/0 AWG	16 ... 70 mm² 6 ... 2/0 AWG	18 mm 0.708 in	5 mm 0.20 in	6... 10 Nm 53 ... 88 lb.in
Output	1 x	Ø 6.8 mm Ø 0.27 in	2.5 ... 16 mm² 14 ... 6 AWG	6 ... 16 mm² 10 ... 6 AWG	11 mm 0.43 in	3 mm 0.12 in	2 ... 3 Nm 18 ... 26.5 lb.in
	6 x	Ø 6.4 mm Ø 0.25 in	2.5 ... 16 mm² 14 ... 6 AWG	2.5 ... 16 mm² 14 ... 6 AWG	11 mm 0.43 in	5.5 mm 0.22 in	2 ... 3 Nm 18 ... 26.5 lb.in

When using maximum cable size with insulated ferrules, use a maximum of 2 non-adjacent holes in each row.

Not allowed			
Flexible without ferrule (IEC V-K & UL: class 5/6)	Flexible with insulated ferrule (IEC V-K & UL: class 5/6)	Rigid Solid (IEC V-U class 1, UL solid)	Rigid stranded (IEC V-R class 2, UL class B/C)

Allen key Posidriv - flat screwdriver

Accessories

	Description			Color	Type	Part Number		Pkg qty	Weight 1 pce g
1	End stops	10 mm	0.394 in	Dark grey	BAM4	1SNK900001R0000		50	14.00
		5.2 mm	0.205 in		BAZ1	1SNK900002R0000		50	5.30
		10 mm	0.394 in		BAZH1	1SNK900102R0000		20	24.00
2	Terminal block markers	Blank card		Green	MC512PA-GN	1SNK149997R0000		20	10.00
				Blue	MC512PA-BL	1SNK149998R0000		20	10.00
				White	MC512PA	1SNK149999R0000		20	10.00
		Pre-printed marker card (L1-L2-L3-N-PE)			MC512PA	1SNK149002R0000		1	10.00

Complete list of accessories is indicated in the terminal block datasheet including end stops. Some accessories such as jumper bars may modify the terminal block's ratings: Complete information available in the accessories section of the catalog.

1SNC16602 1S0201

DBL250 power distribution blocks

Single pole - 46 mm 1.81 in spacing

1SNC166030V0014

DBL250

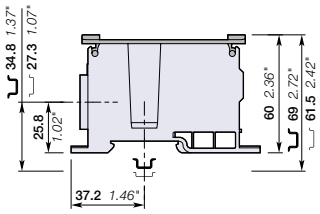

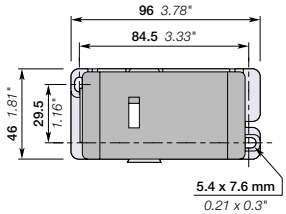

46 mm 1.81 in spacing

Mounting instructions

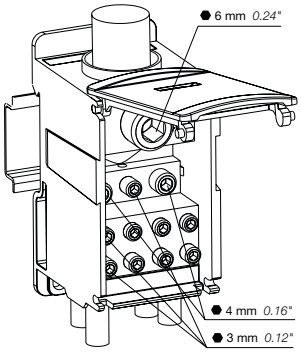

Description

- 3 configurations: distribute unipolar and multipolar power lines, or combine several inputs
- Mount it on Din rail or plate and save up to 50% rail space compared to conventional copper bars
- Reduce the assembly time by 80% by avoiding to use fastening and isolating components
- Easy identification with the reversible cover and delivered pre-printed markers L1, L2, L3, N, PE, +, –.

Ordering details

Description		Color	Type	Part Number		Pkg qty	Weight 1 pce g
Feed-through	Single pole distribution, 12 connections	Grey	DBL250	1SNL325010R0000		1	439

Main technical data

Connecting capacity		IEC	UL
Max current / Cross section	Copper	250 A / 120 mm²	255 A / 250 Kcmil
	Aluminium	200 A / 120 mm²	
Rated voltage		1000 V AC / 1500 V DC	1000 V
Rated impulse voltage		8 kV	
Short-time withstand current (Icw 1s)		11400 A	
Short Circuit Current Rating (SCCR)			100 kA
Rated peak withstand current (Ipk)		51 kA	
Protection		IP10	NEMA 1

The connecting capacity data for one Rigid: Solid/Stranded - Flexible conductor (when applicable) is a mandatory information required by IEC, UL and CSA standards (Copper conductors). All other data are provided as supplementary information only. For more details, please consult our CB, UL or CSA certificates and technical datasheet available on http://www.TE.com

CE CB RoHS USR CSA EAC EV

Mounting & wiring instructions

Rail: TH 35-7.5, TH 35-15

Connection Number		Size	Wire type		Wire stripping length	Tool	Torque
Input	1 x	Ø 15.3 mm Ø 0.60 in	35 ... 95 mm² 2 ... 3/0 AWG	35 ... 120 mm² 2 ... 250 Kcmil	28 mm 1.10 in	6 mm 0.24 in	19 ... 21 Nm 168 ... 185 lb.in
Output	2 x	Ø 8.7 mm Ø 0.34 in	2.5 ... 25 mm² 14 ... 4 AWG	2.5 ... 35 mm² 14 ... 2 AWG	11 mm 0.43 in	4 mm 0.16 in	3.5 ... 5 Nm 31 ... 44 lb.in
	5 x	Ø 6.4 mm Ø 0.25 in	2.5 ... 16 mm² 14 ... 6 AWG	2.5 ... 16 mm² 14 ... 6 AWG	11 mm 0.43 in	3 mm 0.12 in	2 ... 3 Nm 18 ... 26.5 lb.in
	4 x	Ø 5.7 mm Ø 0.22 in	2.5 ... 10 mm² 14 ... 8 AWG	2.5 ... 10 mm² 14 ... 8 AWG	11 mm 0.43 in	3 mm 0.12 in	2 ... 3 Nm 18 ... 26.5 lb.in

Not allowed Flexible without ferrule (IEC V-K & UL: class 5/6)	Flexible with insulated ferrule (IEC V-K & UL: class 5/6)	Rigid Solid (IEC V-U class 1, UL solid)	Rigid stranded (IEC V-R class 2, UL class B/C)

Allen key Posidriv - flat screwdriver

Accessories

1

2

	Description			Color	Type	Part Number		Pkg qty	Weight 1 pce g
1	End stops	10 mm	0.394 in	Dark grey	BAM4	1SNK900001R0000		50	14.00
		5.2 mm	0.205 in		BAZ1	1SNK900002R0000		50	5.30
		10 mm	0.394 in		BAZH1	1SNK900102R0000		20	24.00
2	Terminal block markers	Blank card		Green	MC512PA-GN	1SNK149997R0000		20	10.00
				Blue	MC512PA-BL	1SNK149998R0000		20	10.00
				White	MC512PA	1SNK149999R0000		20	10.00
		Pre-printed marker card (L1-L2-L3-N-PE)			MC512PA	1SNK149002R0000		1	10.00

Complete list of accessories is indicated in the terminal block datasheet including end stops. Some accessories such as jumper bars may modify the terminal block's ratings: Complete information available in the accessories section of the catalog.

1SNC166016S0201

DBL250-F power distribution blocks

Single pole - Flat entry - 29 mm 1.14 in spacing

1SNC166052V0014

DBL250-F

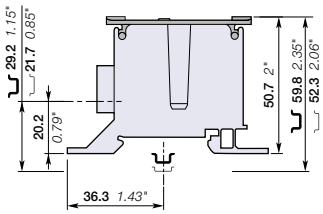

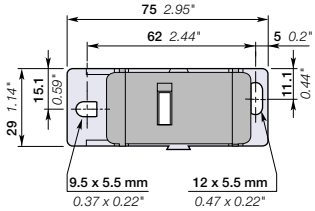

29 mm 1.14 in spacing

Mounting instructions

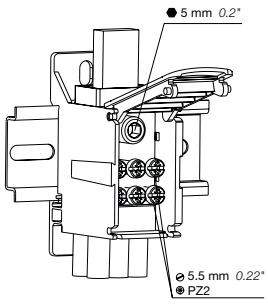

Description

- Suitable for distributing power from flat conductors: flexible or solid bars
- Mount it on Din rail or plate and save up to 50% rail space compared to conventional copper bars
- Reduce the assembly time by 80% by avoiding to use fastening and isolating components
- Easy identification with the reversible cover and delivered pre-printed markers L1, L2, L3, N, PE, +, –.

Ordering details

Description		Color	Type	Part Number		Pkg qty	Weight 1 pce g
Feed-through	Single pole distribution - Flat entry, 7 connections	Grey	DBL250-F	1SNL325060R0000		1	119

Main technical data

Connecting capacity		IEC	UL
Max current / Cross section	Flexible busbar	250 A / 6 x 15.5 x 0.8 mm	250 A / 6 x 15.5 x 0.8 mm
	Solid busbar	208 A / 12 x 4 mm	160 A / 12 x 4 mm
Rated voltage		1000 V AC / 1500 V DC	1000 V
Rated impulse voltage		8 kV	
Short-time withstand current (Icw 1s)		11400 A	
Short Circuit Current Rating (SCCR)			100 kA
Rated peak withstand current (Ipk)		22.8 kA	
Protection		IP20	NEMA 1

The connecting capacity data for one Rigid: Solid/Stranded - Flexible conductor (when applicable) is a mandatory information required by IEC, UL and CSA standards (Copper conductors). All other data are provided as supplementary information only. For more details, please consult our CB, UL or CSA certificates and technical datasheet available on http://www.TE.com

CE RoHS USR CSA EAC EV

Mounting & wiring instructions

Rail: TH 35-7.5, TH 35-15

Connection Number		Size	Wire type		Wire stripping length	Tool	Torque
Input	1 x	15.5 x 7.5 mm 0.59 x 0.28 in	12 x 4 mm	3 x 9 x 0.8 mm ... ... 6 x 15.5 x 0.8 mm	15 mm 0.59 in	5 mm 0.20 in	13.5 Nm 120 lb.in
Output	6 x	Ø 6.6 mm Ø 0.26 in	2.5 ... 16 mm² 14 ... 6 AWG	2.5 ... 16 mm² 14 ... 6 AWG	11 mm 0.43 in	5.5 mm 0.22 in	2 ... 3 Nm 18 ... 26.5 lb.in

When using maximum cable size with insulated ferrules, use a maximum of 2 non-adjacent holes in each row.

Not allowed					
Flexible without ferrule (IEC V-K & UL: class 5/6)	Flexible with insulated ferrule (IEC V-K & UL: class 5/6)	Rigid Solid (IEC V-U class 1, UL solid)	Rigid stranded (IEC V-R class 2, UL class B/C)	Solid busbar	Flexible busbar

Allen key Posidriv - flat screwdriver

Accessories

1

2

	Description			Color	Type	Part Number		Pkg qty	Weight 1 pce g
1	End stops	10 mm	0.394 in	Dark grey	BAM4	1SNK900001R0000		50	14.00
		5.2 mm	0.205 in		BAZ1	1SNK900002R0000		50	5.30
		10 mm	0.394 in		BAZH1	1SNK900102R0000		20	24.00
2	Terminal block markers	Blank card		Green	MC512PA-GN	1SNK149997R0000		20	10.00
				Blue	MC512PA-BL	1SNK149998R0000		20	10.00
				White	MC512PA	1SNK149999R0000		20	10.00
		Pre-printed marker card (L1-L2-L3-N-PE)			MC512PA	1SNK149002R0000		1	10.00

Complete list of accessories is indicated in the terminal block datasheet including end stops. Some accessories such as jumper bars may modify the terminal block's ratings: Complete information available in the accessories section of the catalog.

1SNC166022S0201

DBL400 power distribution blocks

Single pole - 46 mm 1.81 in spacing

1SNC166031W0014

DBL400

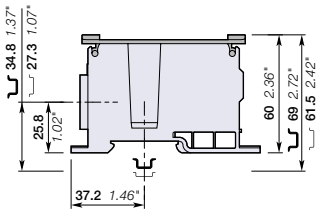

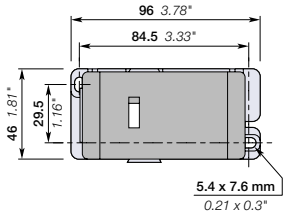

46 mm 1.81 in spacing

Mounting instructions

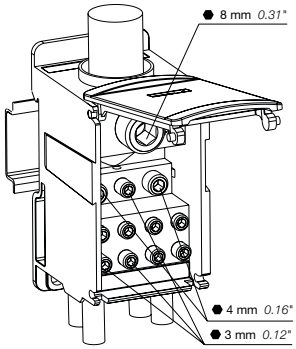

Description

- 3 configurations: distribute unipolar and multipolar power lines, or combine several inputs
- Mount it on Din rail or plate and save up to 50% rail space compared to conventional copper bars
- Reduce the assembly time by 80% by avoiding to use fastening and isolating components
- Easy identification with the reversible cover and delivered pre-printed markers L1, L2, L3, N, PE, +, –.

Ordering details

Description		Color	Type	Part Number		Pkg qty	Weight 1 pce g
Feed-through	Single pole distribution, 12 connections	Grey	DBL400	1SNL340010R0000		1	425

Main technical data

Connecting capacity		IEC	UL
Max current / Cross section	Copper	400 A / 185 mm²	335 A / 400 Kcmil
	Aluminium	300 A / 185 mm²	
Rated voltage		1000 V AC / 1500 V DC	1000 V
Rated impulse voltage		8 kV	
Short-time withstand current (Icw 1s)		18000 A	
Short Circuit Current Rating (SCCR)			100 kA
Rated peak withstand current (Ipk)		51 kA	
Protection		IP10	NEMA 1

The connecting capacity data for one Rigid: Solid/Stranded - Flexible conductor (when applicable) is a mandatory information required by IEC, UL and CSA standards (Copper conductors). All other data are provided as supplementary information only. For more details, please consult our CB, UL or CSA certificates and technical datasheet available on http://www.TE.com

CE CB RoHS USR CSA EAC EV

Mounting & wiring instructions

Rail: TH 35-7.5, TH 35-15

Connection Number		Size	Wire type		Wire stripping length	Tool	Torque
Input	1 x	Ø 18.8 mm Ø 0.74 in	95 ... 150 mm² 3/0 ... 300 Kcmil	95 ... 185 mm² 3/0 ... 400 Kcmil	28 mm 1.10 in	8 mm 0.31 in	25 Nm 221 lb.in
Output	2 x	Ø 8.7 mm Ø 0.34 in	2.5 ... 25 mm² 14 ... 4 AWG	2.5 ... 35 mm² 14 ... 2 AWG	11 mm 0.43 in	4 mm 0.16 in	3.5 ... 5 Nm 31 ... 44 lb.in
	5 x	Ø 6.4 mm Ø 0.25 in	2.5 ... 16 mm² 14 ... 6 AWG	2.5 ... 16 mm² 14 ... 6 AWG	11 mm 0.43 in	3 mm 0.12 in	2 ... 3 Nm 18 ... 26.5 lb.in
	4 x	Ø 5.7 mm Ø 0.22 in	2.5 ... 10 mm² 14 ... 8 AWG	2.5 ... 10 mm² 14 ... 8 AWG	11 mm 0.43 in	3 mm 0.12 in	2 ... 3 Nm 18 ... 26.5 lb.in

Not allowed Flexible without ferrule (IEC V-K & UL: class 5/6)	Flexible with insulated ferrule (IEC V-K & UL: class 5/6)	Rigid Solid (IEC V-U class 1, UL solid)	Rigid stranded (IEC V-R class 2, UL class B/C)

Allen key Posidriv - flat screwdriver

1 2

Accessories

	Description			Color	Type	Part Number		Pkg qty	Weight 1 pce g
1	End stops	10 mm	0.394 in	Dark grey	BAM4	1SNK900001R0000		50	14.00
		5.2 mm	0.205 in		BAZ1	1SNK900002R0000		50	5.30
		10 mm	0.394 in		BAZH1	1SNK900102R0000		20	24.00
2	Terminal block markers	Blank card		Green	MC512PA-GN	1SNK149997R0000		20	10.00
				Blue	MC512PA-BL	1SNK149998R0000		20	10.00
				White	MC512PA	1SNK149999R0000		20	10.00
		Pre-printed marker card (L1-L2-L3-N-PE)			MC512PA	1SNK149002R0000		1	10.00

Complete list of accessories is indicated in the terminal block datasheet including end stops. Some accessories such as jumper bars may modify the terminal block's ratings: Complete information available in the accessories section of the catalog.

1SNC166017S0201

DBL400-PV power distribution blocks
Single pole - 46 mm 1.81 in spacing

1SNC166053V0014

DBL400-PV

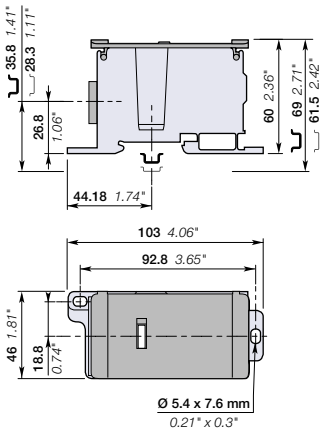

46 mm 1.81 in spacing

Mounting instructions

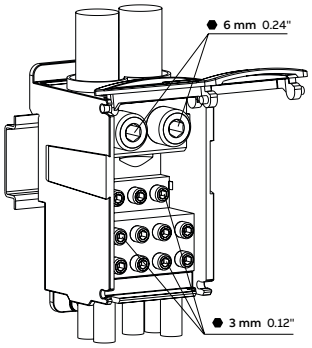

Description

- Suitable for solar application with the possibility to combine 12 photovoltaic strings
- Mount it on Din rail or plate and save up to 50% rail space compared to conventional copper bars
- Reduce the assembly time by 80% by avoiding to use fastening and isolating components
- Increase the number of outputs by using the optional input and connecting two DBL together
- Easy identification with the reversible cover and delivered pre-printed markers L1, L2, L3, N, PE, +, –.

Ordering details

Description		Color	Type	Part Number		Pkg qty	Weight 1 pce g
Feed-through	Single pole distribution, 14 connections	Grey	DBL400-PV	1SNL340011R0000		1	202

Main technical data

Connecting capacity		IEC	UL
Max current / Cross section	Copper	550 A / (2x) 95 mm²	400 A / (2x) 250 Kcmil
Rated voltage		1000 V AC / 1500 V DC	1000 V
Rated impulse voltage		8 kV	
Short-time withstand current (Icw 1s)		22800 A	
Short Circuit Current Rating (SCCR)			100 kA
Rated peak withstand current (Ipk)		47.88 kA	
Protection		IP10	NEMA 1

The connecting capacity data for one Rigid: Solid/Stranded - Flexible conductor (when applicable) is a mandatory information required by IEC, UL and CSA standards (Copper conductors). All other data are provided as supplementary information only. For more details, please consult our CB, UL or CSA certificates and technical datasheet available on http://www.TE.com

CE CB RoHS USR CSA EAC BV

Mounting & wiring instructions

Rail: TH 35-7.5, TH 35-15

Connection Number		Size	Wire type		Wire stripping length	Tool	Torque
Input	2 x	Ø 15,5 mm Ø 0.59 in	25 ... 95 mm² 4 ... 3/0 AWG	25 ... 120 mm² 4 ... 250 Kcmil	28 mm 1.1 in	6 mm 0.24 in	19 ... 21 Nm 168 ... 185 lb.in
Output	12 x	Ø 6.6 mm Ø 0.26 in	2.5 ... 16 mm² 14 ... 6 AWG	2.5 ... 16 mm² 14 ... 6 AWG	11 mm 0.43 in	3 mm 0.19 in	2 ... 3 Nm 18 ... 26.5 lb.in

Not allowed			
Flexible without ferrule (IEC V-K & UL: class 5/6)	Flexible with insulated ferrule (IEC V-K & UL: class 5/6)	Rigid Solid (IEC V-U class 1, UL solid)	Rigid stranded (IEC V-R class 2, UL class B/C)

Allen key Posidriv - flat screwdriver

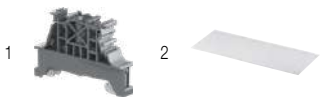

Accessories

	Description			Color	Type	Part Number		Pkg qty	Weight 1 pce g
1	End stops	10 mm	0.394 in	Dark grey	BAM4	1SNK900001R0000		50	14.00
		5.2 mm	0.205 in		BAZ1	1SNK900002R0000		50	5.30
		10 mm	0.394 in		BAZH1	1SNK900102R0000		20	24.00
2	Terminal block markers	Blank card		Green	MC512PA-GN	1SNK149997R0000		20	10.00
				Blue	MC512PA-BL	1SNK149998R0000		20	10.00
				White	MC512PA	1SNK149999R0000		20	10.00
		Pre-printed marker card (L1-L2-L3-N-PE)			MC512PA	1SNK149002R0000		1	10.00

Complete list of accessories is indicated in the terminal block datasheet including end stops. Some accessories such as jumper bars may modify the terminal block's ratings: Complete information available in the accessories section of the catalog.

1SNC166024S0201

DBL500-22 Power Distribution Blocks

Single pole - 46 mm 1.81 in spacing

DBL500-22

1SNC166054V0014

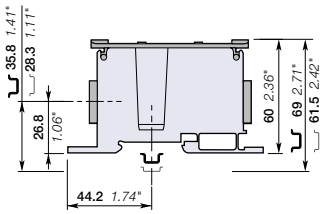

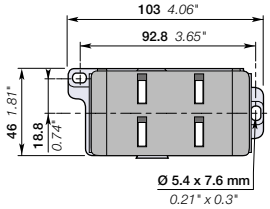

46 mm 1.81 in spacing

Mounting instructions

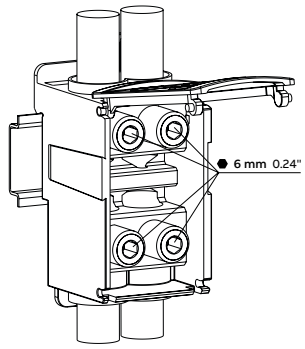

Description

- Suitable for distributing or connecting main power lines with 2 inputs and 2 outputs
- Mount it on Din rail or plate and save up to 50% rail space compared to conventional copper bars
- Reduce the assembly time by 80% by avoiding to use fastening and isolating components
- Increase the number of outputs by using the second input and connecting two DBL together
- Easy identification with the reversible cover and delivered pre-printed markers L1, L2, L3, N, PE, +, –.

Ordering details

Description		Color	Type	Part Number		Pkg qty	Weight 1 pce g
Feed-through	Single pole distribution, 4 connections	Grey	DBL500-22	1SNL850001R0000		1	224

Main technical data

Connecting capacity		IEC	UL
Max current / Cross section	Copper	500 A / (2x) 95 mm²	510 A / (2x) 250 Kcmil
Rated voltage		1000 V AC / 1500 V DC	1000 V
Rated impulse voltage		8 kV	
Short-time withstand current (Icw 1s)		22800 A	
Short Circuit Current Rating (SCCR)			100 kA
Rated peak withstand current (Ipk)		47.88 kA	
Protection		IP10	NEMA 1

The connecting capacity data for one Rigid: Solid/Stranded - Flexible conductor (when applicable) is a mandatory information required by IEC, UL and CSA standards (Copper conductors). All other data are provided as supplementary information only. For more details, please consult our CB, UL or CSA certificates and technical datasheet available on http://www.TE.com

CE CB RoHS USR CSA EAC BV

Mounting & wiring instructions

Rail: TH 35-7.5, TH 35-15

Connection Number		Size	Wire type		Wire stripping length	Tool	Torque
Input	2 x	Ø 15.5 mm Ø 0.61 in	25 ... 95 mm² 4 ... 3/0 AWG	25 ... 120 mm² 4 ... 250 Kcmil	28 mm 1.1 in	6 mm 0.24 in	19 ... 21 Nm 168 ... 185 lb.in
Output	2 x	Ø 15.5 mm Ø 0.61 in	25 ... 95 mm² 4 ... 3/0 AWG	25 ... 120 mm² 4 ... 250 Kcmil	28 mm 1.1 in	6 mm 0.24 in	19 ... 21 Nm 168 ... 185 lb.in

Not allowed			
Flexible without ferrule (IEC V-K & UL: class 5/6)	Flexible with insulated ferrule (IEC V-K & UL: class 5/6)	Rigid Solid (IEC V-U class 1, UL solid)	Rigid stranded (IEC V-R class 2, UL class B/C)

Allen key Posidriv - flat screwdriver

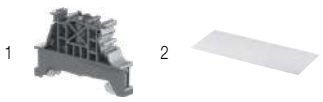

1 2

Accessories

	Description			Color	Type	Part Number		Pkg qty	Weight 1 pce g
1	End Stops	10 mm	0.394 in	Dark Grey	BAM4	1SNK900001R0000		50	14.00
		5.2 mm	0.205 in		BAZ1	1SNK900002R0000		50	5.30
		10 mm	0.394 in		BAZH1	1SNK900102R0000		20	24.00
2	Terminal Block Markers	Blank card		Green	MC512PA-GN	1SNK149997R0000		20	10.00
				Blue	MC512PA-BL	1SNK149998R0000		20	10.00
				White	MC512PA	1SNK149999R0000		20	10.00
		Pre-printed marker card (L1-L2-L3-N-PE)			MC512PA	1SNK149002R0000		1	10.00

Complete list of accessories is indicated in the terminal block datasheet including end stops. Some accessories such as jumper bars may modify the terminal block's ratings: Complete information available in the accessories section of the catalog.

1SNC166025S0201

DBL500-F power distribution blocks

Single pole - Flat entry - 46 mm 1.81 in spacing

1SNC166051W0014

DBL500-F

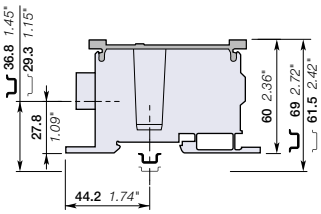

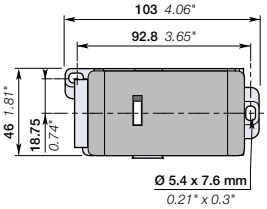

46 mm 1.81 in spacing

Mounting instructions

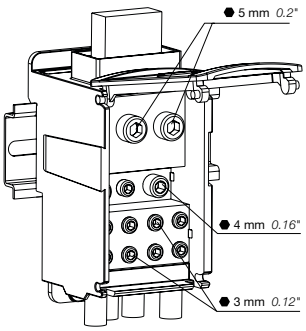

Description

- Suitable for distributing power from flat conductors: 500A (IEC), 420A (UL)
- Mount it on Din rail or plate and save up to 50% rail space compared to conventional copper bars
- Reduce the assembly time by 80% by avoiding to use fastening and isolating components
- Easy identification with the reversible cover and delivered pre-printed markers L1, L2, L3, N, PE, +, –.

Ordering details

Description		Color	Type	Part Number		Pkg qty	Weight 1 pce g
Feed-through	Single pole distribution - Flat entry, 12 connections	Grey	DBL500-F	1SNL350060R0000		1	514

Main technical data

Connecting capacity		IEC	UL
Max current / Max cross section	Flexible busbar	500 A / 10 x 24 x 1 mm	420 A / 10 x 24 x 1 mm
	Solid busbar	500 A / 25 x 5 mm (x2)	420 A / 25 x 5 mm (x2)
Rated voltage		1000 V AC / 1500 V DC	1000 V
Rated impulse voltage			
Short-time withstand current (Icw 1s)		28800 A	
Short Circuit Current Rating (SCCR)			100 kA
Rated peak withstand current (Ipk)		43.9 kA	
Protection		IP20	NEMA 1

The connecting capacity data for one Rigid: Solid/Stranded - Flexible conductor (when applicable) is a mandatory information required by IEC, UL and CSA standards (Copper conductors). All other data are provided as supplementary information only. For more details, please consult our CB, UL or CSA certificates and technical datasheet available on http://www.TE.com

CE RoHS USR CSA EAC

Mounting & wiring instructions

Rail: TH 35-7.5, TH 35-15

Connection Number		Size	Wire type		Wire stripping length	Tool	Torque
Input	1 x	26 x 10.8 mm 1.02 x 0.43 in	12 x 4 mm up to (2x) 25 x 5 mm	3 x 9 x 0.8 mm ... ... 10 x 24 x 1 mm	35 mm 1.38 in	5 mm 0.20 in	13.5 Nm 119.5 lb.in
Output	2 x	Ø 8.69 mm Ø 0.34 in	2.5 ... 25 mm² 14 ... 4 AWG	2.5 ... 35 mm² 14 ... 2 AWG	11 mm 0.43 in	4 mm 0.16 in	3.5 ... 5 Nm 31 ... 44 lb.in
	4 x	Ø 5.7 mm Ø 0.22 in	2.5 ... 10 mm² 14 ... 8 AWG	2.5 ... 10 mm² 14 ... 8 AWG	11 mm 0.43 in	3 mm 0.12 in	2 ... 3 Nm 18 ... 26.5 lb.in
	5 x	Ø 6.59 mm Ø 0.26 in	2.5 ... 16 mm² 14 ... 6 AWG	2.5 ... 16 mm² 14 ... 6 AWG	11 mm 0.43 in	3 mm 0.12 in	2 ... 3 Nm 18 ... 26.5 lb.in

Not allowed					
Flexible without ferrule (IEC V-K & UL: class 5/6)	Flexible with insulated ferrule (IEC V-K & UL: class 5/6)	Rigid Solid (IEC V-U class 1, UL solid)	Rigid stranded (IEC V-R class 2, UL class B/C)	Solid busbar	Flexible busbar

Allen key Posidriv - flat screwdriver

Accessories

1 2

	Description			Color	Type	Part Number		Pkg qty	Weight 1 pce g
1	End stops	10 mm	0.394 in	Dark grey	BAM4	1SNK900001R0000		50	14.00
		5.2 mm	0.205 in		BAZ1	1SNK900002R0000		50	5.30
		10 mm	0.394 in		BAZH1	1SNK900102R0000		20	24.00
2	Terminal block markers	Blank card		Green	MC512PA-GN	1SNK149997R0000		20	10.00
				Blue	MC512PA-BL	1SNK149998R0000		20	10.00
				White	MC512PA	1SNK149999R0000		20	10.00
		Pre-printed marker card (L1-L2-L3-N-PE)			MC512PA	1SNK149002R0000		1	10.00

Complete list of accessories is indicated in the terminal block datasheet including end stops. Some accessories such as jumper bars may modify the terminal block's ratings: Complete information available in the accessories section of the catalog.

1SNC166023S0201

Index
Part Number/Type classification

Part Number	Type	Page
1SNK		
1SNK149002R0000	MC512PA	8
1SNK149997R0000	MC512PA-GN	8
1SNK149998R0000	MC512PA-BL	8
1SNK149999R0000	MC512PA	8
1SNK900001R0000	BAM4	8
1SNK900002R0000	BAZ1	8
1SNK900102R0000	BAZH1	8
1SNL		
1SNL308010R0000	DBL80	8
1SNL312510R0000	DBL125	9
1SNL312530R0000	DBL125-3	10
1SNL316010R0000	DBL160	11
1SNL317510R0000	DBL175	12
1SNL317531R0000	DBL175-C-3	13
1SNL325010R0000	DBL250	14
1SNL325060R0000	DBL250-F	15
1SNL340010R0000	DBL400	16
1SNL340011R0000	DBL400-PV	17
1SNL350060R0000	DBL500-F	19
1SNL850001R0000	DBL500-22	18

Type	Part Number	Page
B		
BAM4	1SNK900001R0000	8
BAZ1	1SNK900002R0000	8
BAZH1	1SNK900102R0000	8
D		
DBL80	1SNL308010R0000	8
DBL125	1SNL312510R0000	9
DBL125-3	1SNL312530R0000	10
DBL160	1SNL316010R0000	11
DBL175	1SNL317510R0000	12
DBL175-C-3	1SNL317531R0000	13
DBL250	1SNL325010R0000	14
DBL250-F	1SNL325060R0000	15
DBL400	1SNL340010R0000	16
DBL400-PV	1SNL340011R0000	17
DBL500-22	1SNL850001R0000	18
DBL500-F	1SNL350060R0000	19
M		
MC512PA	1SNK149002R0000	8
MC512PA	1SNK149999R0000	8
MC512PA-BL	1SNK149998R0000	8
MC512PA-GN	1SNK149997R0000	8

1-1773959-2_Index_TE

Notes

LET'S CONNECT

We make it easy to connect with our experts and are ready to provide all the support you need. For additional information or product assistance, please contact your field representative or our customer service department. Additional information is also available on the website http://www.te.com/entrelec.

TECHNICAL SUPPORT

te.com/support-center

Asia:
+86 400-820-6015

Europe, Middle East, & Africa:
+49 6251-133-0

North America:
+1-888-441-9982

KRÜGER Werke GmbH

AUTHORIZED DISTRIBUTOR

Jederzeit, Überall, KRÜGER-Werke GmbH.
Der Partner der Verbindet.

Wir freuen uns auf eine gute Zusammenarbeit und stehen Ihnen gern bei Fragen zur Verfügung.

Wir bieten Ihnen:

- kurze Lieferzeiten
- große Fachkompetenz
- persönliche Beratung
- mehr als 10.000 Produkte ab Lager verfügbar
- versandkostenfrei ab 100,00 € innerhalb Deutschlands

KRÜGER-Werke GmbH
Dresdner Str. 14
01465 Dresden

+49 351 - 799 02 - 600
+49 351 - 799 02 - 399
entrelec@krueger-werke.de

Besuchen Sie uns direkt ONLINE:

te.com

ENTRELEC, TE Connectivity, TE Connectivity (logo) and Every Connection Counts are trademarks. All other logos, products and/or company names referred to herein might be trademarks of their respective owners.

All other logos, products and/or company names referred to herein might be trademarks of their respective owners.

The information given herein, including drawings, illustrations and schematics which are intended for illustration purposes only, is believed to be reliable. However, TE Connectivity makes no warranties as to its accuracy or completeness and disclaims any liability in connection with its use. TE Connectivity's obligations shall only be as set forth in TE Connectivity's Standard Terms and Conditions of Sale for this product and in no case will TE Connectivity be liable for any incidental, indirect or consequential damages arising out of the sale, resale, use or misuse of the product. Users of TE Connectivity products should make their own evaluation to determine the suitability of each such product for the specific application.

© 2020 TE Connectivity Ltd. family of companies All Rights Reserved.

1-1773980-7 02/20 - Printed in France (PDF)

TE Connectivity

3, rue Jean Perrin
69687 Chassieu cedex
France

Tel: +33 481923100

www.te.com/